This is a digital copy of a book that was preserved for generations on library shelves before it was carefully scanned by Google as part of a project to make the world's books discoverable online.

It has survived long enough for the copyright to expire and the book to enter the public domain. A public domain book is one that was never subject to copyright or whose legal copyright term has expired. Whether a book is in the public domain may vary country to country. Public domain books are our gateways to the past, representing a wealth of history, culture and knowledge that's often difficult to discover.

Marks, notations and other marginalia present in the original volume will appear in this file - a reminder of this book's long journey from the publisher to a library and finally to you.

Usage guidelines

Google is proud to partner with libraries to digitize public domain materials and make them widely accessible. Public domain books belong to the public and we are merely their custodians. Nevertheless, this work is expensive, so in order to keep providing this resource, we have taken steps to prevent abuse by commercial parties, including placing technical restrictions on automated querying.

We also ask that you:

+ *Make non-commercial use of the files* We designed Google Book Search for use by individuals, and we request that you use these files for personal, non-commercial purposes.
+ *Refrain from automated querying* Do not send automated queries of any sort to Google's system: If you are conducting research on machine translation, optical character recognition or other areas where access to a large amount of text is helpful, please contact us. We encourage the use of public domain materials for these purposes and may be able to help.
+ *Maintain attribution* The Google "watermark" you see on each file is essential for informing people about this project and helping them find additional materials through Google Book Search. Please do not remove it.
+ *Keep it legal* Whatever your use, remember that you are responsible for ensuring that what you are doing is legal. Do not assume that just because we believe a book is in the public domain for users in the United States, that the work is also in the public domain for users in other countries. Whether a book is still in copyright varies from country to country, and we can't offer guidance on whether any specific use of any specific book is allowed. Please do not assume that a book's appearance in Google Book Search means it can be used in any manner anywhere in the world. Copyright infringement liability can be quite severe.

About Google Book Search

Google's mission is to organize the world's information and to make it universally accessible and useful. Google Book Search helps readers discover the world's books while helping authors and publishers reach new audiences. You can search through the full text of this book on the web at `http://books.google.com/`

Digitized by Google

HARVARD LAW SCHOOL
LIBRARY

Digitized by Google

Digitized by Google

Digitized by Google

Digitized by Google

Digitized by Google

65

UNITED STATES CIRCUIT COURTS OF APPEALS REPORTS

June 21

WITH ANNOTATIONS

WITH TABLE OF CASES IN THE UNITED STATES CIRCUIT COURTS OF APPEALS WHICH HAVE BEEN PASSED UPON BY THE SUPREME COURT OF THE UNITED STATES, AND TABLE OF CASES IN THE UNITED STATES CIRCUIT COURTS OF APPEALS IN WHICH REHEARINGS HAVE BEEN GRANTED OR DENIED.

130-132

VOLUME 65

LAWYERS' CO-OPERATIVE PUBLISHING CO.
ROCHESTER
1905

Digitized by Google

COPYRIGHT, 1905,
BY
LAWYERS' CO-OPERATIVE PUBLISHING CO.

Rec. June 20, 1905.

Digitized by Google

JUDGES

OF THE

UNITED STATES CIRCUIT COURTS OF APPEALS AND THE CIRCUIT AND DISTRICT COURTS.

FIRST CIRCUIT.

Hon. OLIVER WENDELL HOLMES, Circuit Justice.....Washington, D. C.
Hon. LE BARON B. COLT, Circuit Judge.....Bristol, R. I.
Hon. WILLIAM L. PUTNAM, Circuit Judge.....Portland, Me.
Hon. CLARENCE HALE, District Judge, Maine .....Portland, Me.
Hon. EDGAR ALDRICH, District Judge, New Hampshire.....Littleton, N. H.
Hon. FRANCIS C. LOWELL, District Judge, Massachusetts.....Boston, Mass.
Hon. ARTHUR L. BROWN, District Judge, Rhode Island.....Providence, R. I.

SECOND CIRCUIT.

Hon. RUFUS W. PECKHAM, Circuit Justice.....Washington, D. C.
Hon. WILLIAM J. WALLACE, Circuit Judge.....Albany, N. Y.
Hon. E. HENRY LACOMBE, Circuit Judge.....New York, N. Y.
Hon. WILLIAM K. TOWNSEND, Circuit Judge .....New Haven, Conn.
Hon. ALFRED C. COXE, Circuit Judge .....Utica, N. Y.
Hon. GEORGE C. HOLT, District Judge, S. D. New York .....New York, N. Y.
Hon. JAMES P. PLATT, District Judge, Connecticut. .....Hartford, Conn.
Hon. GEORGE W. RAY, District Judge, N. D. New York .....Norwich, N. Y.
Hon. GEORGE B. ADAMS, District Judge, S. D. New York .....New York, N. Y.
Hon. EDWARD B. THOMAS, District Judge, E. D. New York....29 Liberty St., New York.
Hon. HOYT H. WHEELER, District Judge, Vermont.....Brattleboro, Vt.
Hon. JOHN R. HAZEL, District Judge, W. D. New York. .....Buffalo, N. Y.

THIRD CIRCUIT.

Hon. HENRY B. BROWN, Circuit Justice .....Washington, D. C.
Hon. MARCUS W. ACHESON, Circuit Judge.....Pittsburgh, Pa.
Hon. GEORGE M. DALLAS, Circuit Judge.....Philadelphia, Pa.
Hon. GEORGE GRAY, Circuit Judge .....Wilmington, Del.
Hon. EDWARD G. BRADFORD, District Judge, Delaware.....Wilmington, Del.
Hon. WILLIAM M. LANNING, District Judge, New Jersey .....Trenton, N. J.

Digitized by Google

Hon. JOHN B. McPHERSON, District Judge, E. D. Pennsylvania.....Philadelphia, Pa.
Hon. J. B. HOLLAND, District Judge, E. D. Pennsylvania .....Philadelphia, Pa.
Hon. ROBERT WODROW ARCHBALD, District Judge, M. D. Pennsylvania..Scranton, Pa.
Hon. JOSEPH BUFFINGTON, District Judge, W. D. Pennsylvania.....Pittsburgh, Pa.

FOURTH CIRCUIT.

Hon. MELVILLE W. FULLER, Circuit Justice.....Washington, D. C.
Hon. NATHAN GOFF, Circuit Judge.....Clarksburg, W. Va.
Hon. JETER C. PRITCHARD, Circuit Judge .....Asheville, N. C.
Hon. THOMAS J. MORRIS, District Judge, Maryland.....Baltimore, Md.
Hon. THOMAS R. PURNELL, District Judge, E. D. North Carolina.....Raleigh, N. C.
Hon. JAMES E. BOYD, District Judge, W. D. North Carolina.....Greensboro, N. C.
Hon. WILLIAM H. BRAWLEY, District Judge, E. and W. D. South Car..Charleston, S. C.
Hon. EDMUND WADDILL, Jr., District Judge, E. D. Virginia.....Richmond, Va.
Hon. HENRY CLAY McDOWELL, District Judge, W. D. Virginia.....Lynchburg, Va.
Hon. JOHN J. JACKSON, District Judge, N. D. West Virginia.....Parkersburg, W. Va.
Hon. BENJAMIN F. KELLER, District Judge, S. D. West Virginia.....Branwell, W. Va.

FIFTH CIRCUIT.

Hon. EDWARD D. WHITE, Circuit Justice.....Washington, D. C.
Hon. DON A. PARDEE, Circuit Judge.....Atlanta, Ga.
Hon. A. P. McCORMICK, Circuit Judge.....Dallas, Tex.
Hon. DAVID D. SHELBY, Circuit Judge .....Huntsville, Ala.
Hon. THOMAS GOODE JONES, District Judge, M. and N. D. Alabama...Montgomery, Ala.
Hon. HARRY T. TOULMIN, District Judge, S. D. Alabama.....Mobile, Ala.
Hon. CHARLES SWAYNE, District Judge, N. D. Florida.....Pensacola, Fla.
Hon. JAMES W. LOCKE, District Judge, S. D. Florida.....Jacksonville, Fla.
Hon. WILLIAM T. NEWMAN, District Judge, N. D. Georgia.....Atlanta, Ga.
Hon. EMORY SPEER, District Judge, S. D. Georgia.....Macon, Ga.
Hon. CHARLES PARLANGE, District Judge, E. D. Louisiana.....New Orleans, La.
Hon. ALECK BOARMAN, District Judge, W. D. Louisiana.....Shreveport, La.
Hon. HENRY C. NILES, District Judge, N. and S. D. Mississippi.....Kosciusko, Miss.
Hon. DAVID E. BRYANT, District Judge, E. D. Texas.....Sherman, Tex.
Hon. EDWARD R. MEEK, District Judge, N. D. Texas. .....Ft. Worth, Tex.
Hon. THOMAS S. MAXEY, District Judge, W. D. Texas.....Austin, Tex.
Hon. WALLER T. BURNS, District Judge, S. D. Texas.....Houston, Tex.

SIXTH CIRCUIT.

Hon. JOHN M. HARLAN, Circuit Justice.....Washington, D. C.
Hon. HENRY F. SEVERENS, Circuit Judge. .....Kalamazoo, Mich.
Hon. HORACE H. LURTON, Circuit Judge.....Nashville, Tenn.
Hon. JOHN K. RICHARDS, Circuit Judge .....Ironton, Ohio.
Hon. ANDREW M. J. COCHRAN, District Judge, E. D. Kentucky.....Covington, Ky.
Hon. WALTER EVANS, District Judge, W. D. Kentucky.....Louisville, Ky.
Hon. HENRY H. SWAN, District Judge, E. D. Michigan.....Detroit, Mich.
Hon. GEORGE P. WANTY, District Judge, W. D. Michigan. .....Grand Rapids, Mich.
Hon. AUGUSTUS J. RICKS, District Judge, N. D. Ohio.....Cleveland, Ohio.
Hon. FRANCIS J. WING, District Judge, N. D. Ohio .....Cleveland, Ohio.
Hon. ALBERT C. THOMPSON, District Judge, S. D. Ohio .....Cincinnati, Ohio.
Hon. CHARLES D. CLARK, District Judge, E. and M. D. Tennessee....Chattanooga, Tenn.
Hon. ELI S. HAMMOND, District Judge, W. D. Tennessee.....Memphis, Tenn.

Digitized by Google

SEVENTH CIRCUIT.

Hon. WILLIAM R. DAY, Circuit Justice.....Washington, D. C.
Hon. JAMES G. JENKINS, Circuit Judge.....Milwaukee, Wis.
Hon. PETER S. GROSSCUP, Circuit Judge.....Chicago, Ill.
Hon. FRANCIS E. BAKER, Circuit Judge.....Indianapolis, Ind.
Hon. CHRISTIAN C. KOHLSAAT, District Judge, N. D. Illinois.....Chicago, Ill.
Hon. ALBERT B. ANDERSON, District Judge, Indiana.....Indianapolis, Ind.
Hon. J. OTIS HUMPHREY, District Judge, S. D. Illinois.....Springfield, Ill.
Hon. WILLIAM H. SEAMAN, District Judge, E. D. Wisconsin.....Sheboygan, Wis.
Hon. ROMANZO BUNN, District Judge, W. D. Wisconsin.....Madison, Wis.

EIGHTH CIRCUIT.

Hon. DAVID J. BREWER, Circuit Justice.....Washington, D. C.
Hon. WALTER H. SANBORN, Circuit Judge.....St. Paul, Minn.
Hon. AMOS M. THAYER, Circuit Judge.....St. Louis, Mo.
Hon. WILLIS VAN DEVANTER, Circuit Judge.....Cheyenne, Wyo.
Hon. WILLIAM C. HOOK, Circuit Judge.....Leavenworth, Kan.
Hon. JACOB TRIEBER, District Judge, E. D. Arkansas.....Little Rock, Ark.
Hon. JOHN H. ROGERS, District Judge, W. D. Arkansas.....Ft. Smith, Ark.
Hon. MOSES HALLETT, District Judge, Colorado.....Denver, Colo.
Hon. SMITH McPHERSON, District Judge, S. D. Iowa.....Red Oak, Iowa.
Hon. HENRY THOMAS REED, District Judge, N. D. Iowa.....Cresco, Iowa.
Hon. JOHN C. POLLOCK, District Judge, Kansas.....Topeka, Kan.
Hon. WM. LOCHREN, District Judge, Minnesota.....Minneapolis, Minn.
Hon. PAGE MORRIS, District Judge, Minnesota.....Duluth, Minn.
Hon. ELMER B. ADAMS, District Judge, E. D. Missouri.....St. Louis, Mo.
Hon. JOHN F. PHILIPS, District Judge, W. D. Missouri.....Kansas City, Mo.
Hon. W. H. MUNGER, District Judge, Nebraska.....Omaha, Neb.
Hon. CHARLES F. AMIDON, District Judge, North Dakota.....Fargo, N. D.
Hon. JOHN E. CARLAND, District Judge, South Dakota.....Sioux Falls, S. D.
Hon. JOHN A. MARSHALL, District Judge, Utah.....Salt Lake City, Utah.
Hon. JOHN A. RINER, District Judge, Wyoming.....Cheyenne, Wyo.

NINTH CIRCUIT.

Hon. JOSEPH McKENNA, Circuit Justice.....Washington, D. C.
Hon. WM. W. MORROW, Circuit Judge.....San Francisco, Cal.
Hon. WILLIAM B. GILBERT, Circuit Judge.....Portland, Or.
Hon. ERSKINE M. ROSS, Circuit Judge.....Los Angeles, Cal.
Hon. JOHN J. DE HAVEN, District Judge, N. D. California.....San Francisco, Cal.
Hon. OLIN WELLBORN, District Judge, S. D. California.....Los Angeles, Cal.
Hon. WILLIAM H. HUNT, District Judge, Montana.....Helena, Mont.
Hon. CORNELIUS H. HANFORD, District Judge, Washington.....Seattle, Wash.
Hon. THOMAS P. HAWLEY, District Judge, Nevada.....Carson City, Nev.
Hon. CHARLES B. BELLINGER, District Judge, Oregon.....Portland, Or.
Hon. JAMES H. BEATTY, District Judge, Idaho.....Boise City, Idaho.

Digitized by Google

Digitized by Google

CASES REPORTED.

Page

A. Booth & Co., Davis v..... 269
Adler-Weinberger S. S. Co., Rothschild v. 350
Admiral Schley, The..... 417
Ah Chung, United States v..... 562
Allen v. Davenport..... 641
Allen v. Field..... 19
Allen, Viquesney v..... 259
Allen-West Commission Co., Patillo v. 508
American Alkali Co. v. Salom.... 284
American Bonding Co. of Baltimore v. Spokane Bldg. & Loan Soc. 121
American Cement & Oil Co., G. W. Cole Co. v..... 105
American Electric Telephone Co., Western Telephone Mfg. Co. v.. 313
American Graphophone Co., Victor Talking Mach. Co. v..... 305
American Sugar Refining Co., United States v..... 557
American Tube Works v. Bridgewater Iron Co..... 636
American Woolen Co., McCabe v.. 59
Anderson, Gibson v..... 277
Armour Packing Co. v. Metropolitan Water Co..... 335
Arter v. Northwestern Mut. Life Ins. Co. 156
Asher Lumber Co., Lockard v..... 517
Astrich v. German-American Ins. Co. 251
Atkinson, Whitman v..... 185
Atlantic City, Third Nat. Bank of City of Philadelphia v..... 177

Baker & Co. v. Slack..... 138
Bartels, Northwestern Commercial Co. v. 263
Bartram Bros., United States v.. 557
Battin v. Northwestern Mut. Life Ins. Co. 358
Bean-Chamberlain Mfg. Co. v. Standard Spoke & Nipple Co... 201
Beifeld, Spencer Elevator Safety Guard Co. v..... 196

Page

Benjamin H. Howell, Son & Co., United States v..... 557
Benton, Chicago, M. & St. P. R. Co. v. 660
Betts v. United States..... 452
Bidwell, Mosle v..... 533
Bliss Co. v. Buffalo Tin Can Co.. 289
Blue Mountain Iron & Steel Co. v. Portner 295
Boise City Irr. & Land Co. v. Clark 399
Bomberger, Chicago Terminal Transfer R. Co. v..... 64
Booker v. Crocker..... 627
Booth & Co., Davis v..... 269
Bothe, Pratt v..... 48
Boyd v. Schneider..... 209
Brady, The John I..... 221
Bridgewater Iron Co., American Tube Works v..... 636
Britain S. S. Co. v. J. B. King Transp. Co. 300
British & Foreign Marine Ins. Co., Portland Flouring Mills Co. v.. 344
Britton v. Central Union Telephone Co. 598
Brown v. Harkins..... 301
Brown, Tennessee Oil, Gas & Mineral Co. v..... 524
Bruce, International Postal Supply Co. of New York v..... 130
Brunswick-Balke-Collender Co. v. Klumpp 447
Buckingham v. First Nat. Bank.. 498
Buffalo Tin Can Co., E. W. Bliss Co. v. 289
Bunker Hill & Sullivan Mining & Concentrating Co. v. Jones..... 363
Burns v. Burns..... 224
Burr v. Knickerbocker Steam Towage Co. 554
Burr, Pennsylvania R. Co. v..... 331
Burrill v. Crossman..... 189

Campbell v. National Broadway Bank 664
Carstens, Frye & Bruhn v..... 192

Digitized by Google

Page
Cashman, Western Union Tel. Co. v. 607
Castleberry, Phœnix Bridge Co. v. 481
Central Union Telephone Co., Britton v. 598
Charles F. Mayer, The..... 417
Chautauqua Assembly, McKee v.. 8
Chicago Great Western R. Co. v. Roddy 470
Chicago, M. & St. P. R. Co. v. Benton 660
Chicago, M. & St. P. R. Co. v. Voelker 226
Chicago, M. & St. P. R. Co., Galow v. 507
Chicago Terminal Transfer R. Co. v. Bomberger 64
City of Davenport v. Allen..... 641
City of New York and City of Brooklyn v. Dubois..... 590
City of Savannah v. Holst..... 449
Clark v. Langenbach..... 181
Clark, Boise City Irr. & Land Co. v. 399
Cole Co. v. American Cement & Oil Co. 105
Col. John F. Gaynor, The..... 340
Commonwealth Title Ins. & Trust Co., Sprigg v..... 243
Conner v. Manchester Assur. Co.. 127
Coughlin, Illinois Cent. R. Co. v. 101
Crocker, Booker v..... 627
Crossman, Burrill v..... 189
Crown Cork & Seal Co., Ideal Stopper Co. v..... 436

Dauchy, In re..... 78
Davenport, Allen v..... 641
Davis v. A. Booth & Co..... 269
Davis-Colby Ore Roaster Co., Lackawanna Iron & Steel Co. v. 306
Dodge v. United States..... 603
Drewson v. Hartje Paper Mfg. Co. 548
Dubois, City of New York and City of Brooklyn v..... 590
Du Bois, Lazier Gas Engine Co. v. 172

Eaton & Prince Co. v. Wadsworth 640
Edelman, In re..... 665
Eliza Lines, The..... 538
Elliott, Rupp & Wittgenfeld Co. v. 544
Ellis v. Inman, Poulsen & Co..... 488
Enterprise Mfg. Co. v. Landers, Frary & Clark..... 587
Erskine M. Phelps, The..... 239

Page
E. W. Bliss Co. v. Buffalo Tin Can Co. 289

Fachant, Hopkins v..... 1
Field, Allen v..... 19
First Nat. Bank v. State Nat. Bank 406
First Nat. Bank v. State Nat. Bank 414
First Nat. Bank, Buckingham v.. 498
Fisheries Co. v. Lennen..... 79
Frye & Bruhn v. Carstens..... 192

Galow v. Chicago, M. & St. P. R. Co. 507
Gaynor, The Col. John F..... 340
Geddes, United States v..... 320
General Electric Co., Star Brass Works v. 316
German-American Ins. Co., Astrich v. 251
Gibson v. Anderson..... 277
Goldsmith, Thuringia Ins. Co. of Erfurt, Germany, v..... 677
Gordon v. Ware Nat. Bank..... 580
Grand Trunk R. Co., McMillan v. 165
Graveson, Maxfield v..... 595
Gray, James v..... 385
Guaranty Trust Co. of New York v. North Chicago St. R. Co..... 65
Guthrie v. Sparks..... 427
G. W. Cole Co. v. American Cement & Oil Co..... 105

Haas Co., In re..... 218
Habeler v. Rogers..... 281
H. A. Meldrum Co., Lowrie v.... 194
Harkins, Brown v..... 301
Harris, Levy v..... 113
Hartje Paper Mfg. Co., Drewson v. 548
Hearick, Rex Buggy Co. v..... 676
Higgin Mfg. Co. v. Murdock..... 466
Hoffman v. Wilson..... 14
Holst, City of Savannah v..... 449
Hopkins v. Fachant..... 1
Hosmer v. Wyoming Ry. & Iron Co. 81
Howell, Son & Co., United States v. 557

Ideal Stopper Co. v. Crown Cork & Seal Co..... 436
Illinois Cent. R. Co. v. Coughlin.. 101
Ingraham v. National Salt Co... 54

Digitized by Google

Page
Inman, Poulsen & Co., Ellis v.... 488
International Postal Supply Co. of New York v. Bruce..... 130

Jabine v. Sparks..... 424
James, Ex parte..... 385
James, In re..... 385
James v. Gray..... 385
Jameson v. Lewis..... 586
J. B. King Transp. Co., Britain S. S. Co. v..... 300
John F. Gaynor, The Col..... 340
John I. Brady, The..... 221
Johnston v. Turnbull..... 157
Jones, Bunker Hill & Sullivan Mining & Concentrating Co. v.. 363

King Gruffydd, The..... 495
King Transp. Co., Britain S. S. Co. v. 300
Klumpp, Brunswick-Balke-Collender Co. v..... 447
Knickerbocker Steam Towage Co., Burr v. 554
Knott, Louisville Trust Co. v..... 158
Kohn v. North Chicago St. R. Co. 65
Kuntz v. Young..... 477

Lackawanna Iron & Steel Co. v. Davis-Colby Ore Roaster Co... 306
Laden v. Meck..... 361
Lamb v. Powder River Live Stock Co. 570
Landers, Frary & Clark, Enterprise Mfg. Co. v..... 587
Land Title & Trust Co. v. Tatnall 671
Lang, Lockman v..... 621
Langenbach, Clark v..... 181
Lazier Gas Engine Co. v. Du Bois 172
Lehigh Valley R. Co., Long v.... 354
Lennen, Fisheries Co. v..... 79
Levy v. Harris..... 113
Lewis, Jameson v..... 586
Lines, The Eliza..... 538
Livingstone, The 610
Lockard v. Asher Lumber Co.... 517
Lockman v. Lang..... 621
Long v. Lehigh Valley R. Co..... 354
Louisville Trust Co. v. Knott.... 158
Lowrie v. H. A. Meldrum Co..... 194

McCabe v. American Woolen Co.. 59
McCaffrey, Sackett v..... 205
McIntire, In re..... 406
McKee v. Chautauqua Assembly 8

Page
McKnight v. United States..... 37
McMillan v. Grand Trunk R. Co. 165
Manchester Assur. Co., Conner v.. 127
Mason, O'Connell v..... 541
Maxfield v. Graveson..... 595
Mayer, The Charles F..... 417
Meck, Laden v..... 361
Meldrum Co., Lowrie v..... 194
Metropolitan Water Co., Armour Packing Co. v..... 335
Michigan Cent. R. Co., Wright v. 327
Mosle v. Bidwell..... 533
Murdock, Higgin Mfg. Co. v..... 466
Murray v. Pannaci..... 153

National Broadway Bank, Campbell v. 664
National German-American Bank, Shaw v. 620
National Salt Co., Ingraham v... 54
North Chicago St. R. Co., Guaranty Trust Co. of New York v. 65
North Chicago St. R. Co., Kohn v. 65
Northwestern Commercial Co. v. Bartels 263
Northwestern Mut. Life Ins. Co., Arter v. 156
Northwestern Mut. Life Ins. Co., Battin v. 358

O'Connell v. Mason..... 541

Pannaci, Murray v..... 153
Patillo v. Allen-West Commission Co. 508
Pennsylvania R. Co. v. Burr..... 331
Petty, Western Coal & Mining Co. v. 667
Phelps, The Erskine M..... 239
Phœnix Bridge Co. v. Castleberry 481
Portland Flouring Mills Co. v. British & Foreign Marine Ins. Co. 344
Portner, Blue Mountain Iron & Steel Co. v..... 295
Powder River Live Stock Co., Lamb v. 570
Pratt v. Bothe..... 48

Ramsey, Richmond Locomotive Works v. 503
Raphael v. Rio Grande Western R. Co. 632
Rex Buggy Co. v. Hearick..... 676

Digitized by Google

Page

Richmond Locomotive Works v. Ramsey 503
Rio Grande Western R. Co., Raphael v. 632
Roberts v. Shelby Steel Tube Co. 589
Roddy, Chicago Great Western R. Co. v. 470
Rogers, Habeler v..... 281
Rothschild v. Adler-Weinberger S. S. Co. 350
Rupp & Wittgenfeld Co. v. Elliott 544

Sackett v. McCaffrey..... 205
Salom, American Alkali Co. v... 284
Schenectady R. Co., Thompson v. 325
Schneider, Boyd v..... 209
Shaw v. National German-American Bank 620
Shelby Steel Tube Co., Roberts v. 589
Simpson, Southern R. Co. v..... 563
Slack, Walter Baker & Co. v..... 138
Southern R. Co. v. Simpson..... 563
Sparks, Guthrie v..... 427
Sparks, Jabine v..... 424
Spencer Elevator Safety Guard Co. v. Beifeld..... 196
Spokane Bldg. & Loan Soc., American Bonding Co. of Baltimore v. 121
Sprigg v. Commonwealth Title Ins. & Trust Co..... 243
Standard Spoke & Nipple Co., Bean-Chamberlain Mfg. Co. v.. 201
Star Brass Works v. General Electric Co. 316
State Nat. Bank, First Nat. Bank v. 406
State Nat. Bank, First Nat. Bank v. 414

Tatnall, Land Title & Trust Co. v. 671
Taylor v. Ziegenhagen..... 218
Tennessee Oil, Gas & Mineral Co. v. Brown 524
Third Nat. Bank of City of Philadelphia v. Atlantic City..... 177
Thompson v. Schenectady R. Co.. 325

Page

Thuringia Ins. Co. of Erfurt, Germany, v. Goldsmith..... 677
Titania, The 215
Turnbull, Johnston v..... 157

United States v. Ah Chung..... 562
United States v. American Sugar Refining Co. 557
United States v. Bartram Bros... 557
United States v. Benjamin H. Howell, Son & Co..... 557
United States v. Geddes..... 320
United States v. Withers..... 16
United States, Betts v..... 452
United States, Dodge v..... 603
United States, McKnight v..... 37

Victor Talking Mach. Co. v. American Graphophone Co..... 305
Viquesney v. Allen..... 259
Voelker, Chicago, M. & St. P. R. Co. v. 226

Wadsworth, Eaton & Prince Co. v. 640
Walter Baker & Co. v. Slack..... 138
Ware Nat. Bank, Gordon v..... 580
Western Coal & Mining Co. v. Petty 667
Western Telephone Mfg. Co. v. American Electric Telephone Co. 313
Western Union Tel. Co. v. Cashman 607
Whitman v. Atkinson..... 185
Wildcroft, The 145
Wildcroft, The, two cases..... 221
Wilson, Hoffman v..... 14
Withers, United States v..... 16
Wolfe, Young v..... 199
Wright v. Michigan Cent. R. Co.. 327
Wyoming Ry. & Iron Co., Hosmer v. 81

Young v. Wolfe..... 199
Young, Kuntz v..... 477

Ziegenhagen, Taylor v..... 218

Digitized by Google

CASES REPORTED.

ARRANGED UNDER THEIR RESPECTIVE CIRCUITS.

FIRST CIRCUIT.

Page

Admiral Schley, The..... 417
American Tube Works v. Bridgewater Iron Co..... 636

Betts v. United States..... 452
Burr v. Knickerbocker Steam Towage Co. 554

Charles F. Mayer, The..... 417

Eliza Lines, The..... 538

James, Ex parte..... 385
James, In re..... 385
James v. Gray..... 385

Lines, The Eliza..... 538

McCabe v. American Woolen Co.. 59
McMillan v. Grand Trunk R. Co. 165
Mayer, The Charles F..... 417

O'Connell v. Mason..... 541

SECOND CIRCUIT.

Allen v. Field..... 19

Bliss Co. v. Buffalo Tin Can Co.. 289
Britain S. S. Co. v. J. B. King Transp. Co. 300
Brunswick-Balke-Collender Co. v. Klumpp 447
Burns v. Burns..... 224
Burrill v. Crossman..... 189

Campbell v. National Broadway Bank 664

Dauchy, In re..... 78

Page

Dodge v. United States..... 603

Edelman, In re..... 665
Enterprise Mfg. Co. v. Landers, Frary & Clark..... 587
E. W. Bliss Co. v. Buffalo Tin Can Co. 289

Fisheries Co. v. Lennen..... 79

Habeler v. Rogers..... 281

Ingraham v. National Salt Co... 54
International Postal Supply Co. of New York v. Bruce..... 130

King Gruffydd, The..... 495

Livingstone, The 610
Long v. Lehigh Valley R. Co..... 354
Lowrie v. H. A. Meldrum Co..... 194

McKee v. Chautauqua Assembly 8
Mosle v. Bidwell..... 533

Pennsylvania R. Co. v. Burr..... 331

Thompson v. Schenectady R. Co.. 325
Titania, The 215

United States v. American Sugar Refining Co. 557
United States v. Bartram Bros... 557
United States v. Benjamin H. Howell, Son & Co..... 557
United States v. Withers..... 16

Victor Talking Mach. Co. v. American Graphophone Co..... 305

Whitman v. Atkinson..... 185

Young v. Wolfe..... 199

Digitized by Google

THIRD CIRCUIT.

Page
American Alkali Co. v. Salom.... 284
Armour Packing Co. v. Metropolitan Water Co..... 335
Arter v. Northwestern Mut. Life Ins. Co. 156
Astrich v. German-American Ins. Co. 251

Battin v. Northwestern Mut. Life Ins. Co. 358
Brady, The John I..... 221

City of New York and City of Brooklyn v. Dubois..... 590
Col. John F. Gaynor, The..... 340
Gaynor, The Col. John F..... 340

Hoffman v. Wilson..... 14

John F. Gaynor, The Col..... 340
John I. Brady, The..... 221
Johnston v. Turnbull..... 157

Lackawanna Iron & Steel Co. v. Davis-Colby Ore Roaster Co... 306
Land Title & Trust Co. v. Tatnall 671
Lazier Gas Engine Co. v. Du Bois 172
Levy v. Harris..... 113

Murray v. Pannaci..... 153

Rothschild v. Adler-Weinberger S. S. Co. 350

Sprigg v. Commonwealth Title Ins. & Trust Co..... 243

Third Nat. Bank of City of Philadelphia v. Atlantic City..... 177

Wildcroft, The 145
Wildcroft, The, two cases..... 221

FOURTH CIRCUIT.

Blue Mountain Iron & Steel Co. v. Portner 295
Brown v. Harkins..... 301

Ideal Stopper Co. v. Crown Cork & Seal Co..... 436

Jameson v. Lewis..... 586

Phœnix Bridge Co. v. Castleberry 481

Page
Richmond Locomotive Works v. Ramsey 503

Viquesney v. Allen..... 259

FIFTH CIRCUIT.

City of Savannah v. Holst..... 449

Western Union Tel. Co. v. Cashman 607

SIXTH CIRCUIT.

Bean-Chamberlain Mfg. Co. v. Standard Spoke & Nipple Co... 201
Britton v. Central Union Telephone Co. 598
Buckingham v. First Nat. Bank.. 498

Clark v. Langenbach..... 181

Davis v. A. Booth & Co..... 269
Drewson v. Hartje Paper Mfg. Co. 548

Guthrie v. Sparks..... 427

Higgin Mfg. Co. v. Murdock..... 466

Illinois Cent. R. Co. v. Coughlin.. 101

Jabine v. Sparks..... 424

Laden v. Meck..... 361
Lockard v. Asher Lumber Co.... 517
Louisville Trust Co. v. Knott.... 158

Maxfield v. Graveson..... 595

Pratt v. Bothe..... 48

Roberts v. Shelby Steel Tube Co. 589
Rupp & Wittgenfeld Co. v. Elliott 544

Southern R. Co. v. Simpson..... 563
Star Brass Works v. General Electric Co. 316

Tennessee Oil, Gas & Mineral Co. v. Brown 524

United States v. Geddes..... 320

Wright v. Michigan Cent. R. Co.. 327

Digitized by Google

SEVENTH CIRCUIT.

Page
Baker & Co. v. Slack..... 138
Boyd v. Schneider..... 209

Chicago Terminal Transfer R. Co. v. Bomberger 64
Cole Co. v. American Cement & Oil Co. 105

Eaton & Prince Co. v. Wadsworth 640

Galow v. Chicago, M. & St. P. R. Co. 507
Guaranty Trust Co. of New York v. North Chicago St. R. Co..... 65
G. W. Cole Co. v. American Cement & Oil Co..... 105

Haas Co., In re..... 218

Kohn v. North Chicago St. R. Co. 65

Spencer Elevator Safety Guard Co. v. Beifeld..... 196

Taylor v. Ziegenhagen..... 218

Walter Baker & Co. v. Slack..... 138
Western Telephone Mfg. Co. v. American Electric Telephone Co. 313

EIGHTH CIRCUIT.

Allen v. Davenport..... 641

Booker v. Crocker..... 627

Chicago Great Western R. Co. v. Roddy 470
Chicago, M. & St. P. R. Co. v. Benton 660
Chicago, M. & St. P. R. Co. v. Voelker 226
City of Davenport v. Allen..... 641

Gordon v. Ware Nat. Bank..... 580

Hosmer v. Wyoming Ry. & Iron Co. 81

Kuntz v. Young..... 477

Lamb v. Powder River Live Stock Co. 570
Lockman v. Lang..... 621

Page
Patillo v. Allen-West Commission Co. 508

Raphael v. Rio Grande Western R. Co. 632
Rex Buggy Co. v. Hearick..... 676

Shaw v. National German-American Bank 620

Thuringia Ins. Co. of Erfurt, Germany, v. Goldsmith..... 677

Western Coal & Mining Co. v. Petty 667

NINTH CIRCUIT.

American Bonding Co. of Baltimore v. Spokane Bldg. & Loan Soc. 121

Boise City Irr. & Land Co. v. Clark 399
Bunker Hill & Sullivan Mining & Concentrating Co. v. Jones..... 363

Conner v. Manchester Assur. Co.. 127

Ellis v. Inman, Poulsen & Co..... 488
Erskine M. Phelps, The..... 239

First Nat. Bank v. State Nat. Bank 406
First Nat. Bank v. State Nat. Bank 414
Frye & Bruhn v. Carstens..... 192

Gibson v. Anderson..... 277

Hopkins v. Fachant..... 1

McIntire, In re..... 406
McKnight v. United States..... 37

Northwestern Commercial Co. v. Bartels 263

Phelps, The Erskine M..... 239
Portland Flouring Mills Co. v. British & Foreign Marine Ins. Co. 344

Sackett v. McCaffrey..... 205

United States v. Ah Chung..... 562

Digitized by Google

Digitized by Google

CASES CITED.

Page

Abraham, In re, 35 C. C. A. 592, 93 Fed. 767, 782, 784 416
Adams v. Trust Co., 15 C. C. A. 1, 66 Fed. 617 164
Ætna Life Ins. Co. v. France, 94 U. S. 561, 564, 24 L. Ed. 287..... 583
Alabama Gold Mut. Life Ins. Co. v. Insurance Co., 81 Ala. 329, 1 South. 561.. 582
Alaska Min. Co. v. Whelan, 168 U. S. 86, 18 Sup. Ct. 40, 42 L. Ed. 390..... 486
Albert Dumois, The, 177 U. S. 240, 255, 20 Sup. Ct. 595, 44 L. Ed. 751..... 540
Alberty v. U. S., 162 U. S. 499, 16 Sup. Ct. 864, 40 L. Ed. 1051 458
Alexander v. Jennings, 78 Tenn. 419..... 45
Alger v. Anderson (C. C.) 92 Fed. 696.. 393
Allegheny Coal Co. v. Snyder, 45 C. C. A. 604, 106 Fed. 764..... 528
Allegheny Oil Co. v. Snyder, 45 C. C. A. 604, 106 Fed. 764..... 184
Allen v. Davenport, 107 Iowa, 90, 77 N. W. 532; 115 Iowa, 21, 87 N. W. 743... 648, 654, 657
Allen v. Massey, 17 Wall. 351, 21 L. Ed. 542 398
Allen v. U. S., 164 U. S. 492, 498, 17 Sup. Ct. 154, 41 L. Ed. 528..... 458
Allen West Com. Co. v. Patillo, 33 C. C. A. 194, 196, 197, 198, 90 Fed. 628, 630, 631, 632 .....510, 515, 516
Altenberg v. Grant, 28 C. C. A. 244, 246, 83 Fed. 980, 982 624
American Ass'n v. Innis, 60 S. W. 388, 391, 22 Ky. Law Rep. 1196, 1201....519, 521
American Cotton Oil Co. v. Kirk, 15 C. C. A. 540, 68 Fed. 791..... 33
American Surety Co. v. Pauly, 170 U. S. 133, 144, 156, 157, 18 Sup. Ct. 552, 563, 42 L. Ed. 977, 987.....125, 126
Amherst Bank v. Root (1841) 2 Metc. (Mass.) 522 124
Amy v. Watertown, 130 U. S. 320, 325, 9 Sup. Ct. 537, 32 L. Ed. 953.....188, 578
Anderson v. Fitzgerald, 4 H. L. Cas. 484, 507 126
Anderson v. U. S., 171 U. S. 615, 19 Sup. Ct. 54, 43 L. Ed. 300..... 491
Angell v. Draper, 1 Vern. 398, 399..... 262
Ankeney v. Hannon, 147 U. S. 118, 128, 13 Sup. Ct. 206, 37 L. Ed. 105..... 390
Anvil Min. Co. v. Humble, 153 U. S. 540, 549, 14 Sup. Ct. 876, 38 L. Ed. 814..... 177
Applegate v. Mining Co., 117 U. S. 269, 6 Sup. Ct. 742, 29 L. Ed. 892..... 297
Armour v. Hahn, 111 U. S. 318, 4 Sup. Ct. 433, 28 L. Ed. 440..... 508
Armstrong v. Keith, 3 J. J. Marsh. 154, 20 Am. Dec. 131 175
Atkinson v. Allen, 17 C. C. A. 570, 572, 71 Fed. 58, 60..... 511

Page

Atlantic Nat. Bank v. Tavener, 130 Mass. 407, 409.....387, 389
Atlas Bank v. Brownell (1869) 9 R. I. 168 124
Aurora City v. West, 7 Wall. 82, 19 L. Ed. 42 180

Babcock v. Wyman, 19 How. 289, 299, 300, 301, 15 L. Ed. 644..... 392
Backus v. Minor, 3 Cal. 231..... 516
Bainbridge v. Wilcocks, Baldw. 536, Fed. Cas. No. 755 516
Baltimore & O. R. Co. v. Baugh, 149 U. S. 368, 13 Sup. Ct. 914, 37 L. Ed. 772.. 486
Baltimore & O. R. Co. v. Railroad Co., 57 C. C. A. 322, 119 Fed. 678; 187 U. S. 650, 23 Sup. Ct. 848, 47 L. Ed. 349.....71, 164
Baltimore & O. R. Co. v. Voigt, 176 U. S. 498, 20 Sup. Ct. 385, 44 L. Ed. 560... 356
Bank v. Braithwaite, 7 N. D. 358, 372, 75 N. W. 244, 66 Am. St. Rep. 653..... 577
Bank v. Dalton, 9 How. 522, 528, 13 L. Ed. 242 .....574, 578
Bank v. Fenno, 8 Wall. 548, 19 L. Ed. 482 659
Bank v. Tyndale, 176 Mass. 547, 550, 57 N. E. 1022, 51 L. R. A. 447.....385, 396
Bank of Scott City v. Sandusky, 51 Mo. App. 398, 401 413
Bank of United States v. Bank, 6 Pet. 8, 8 L. Ed. 299..... 540
Bardes v. Bank, 178 U. S. 524, 535, 20 Sup. Ct. 1000, 44 L. Ed. 1175..... 626
Bardon v. Railroad, 145 U. S. 535-543, 12 Sup. Ct. 856, 36 L. Ed. 806..... 280
Barney v. Baltimore, 6 Wall. 280, 18 L. Ed. 825 363
Barney v. Latham, 103 U. S. 205, 215, 26 L. Ed. 514 .....86, 363
Barney v. New York, 193 U. S. 430, 24 Sup. Ct. 502, 48 L. Ed. 737..... 451
Barnitz v. Beverly, 163 U. S. 118, 122, 16 Sup. Ct. 1042, 41 L. Ed. 93..... 576
Barnsdall v. Boley (C. C.) 119 Fed. 191.. 531
Barton v. Insurance Co., 42 Mo. 156, 97 Am. Dec. 329 130
Bass v. U. S., 20 D. C. App. Cas. 232, 239 464
Bassett v. French, 31 N. Y. Supp. 667.. 31
Batchelder & Lincoln Co. v. Whitmore, 58 C. C. A. 517, 122 Fed. 355..... 386
Bate Refrigerator Co. v. Sulzberger, 157 U. S. 1, 37, 15 Sup. Ct. 508, 39 L. Ed. 601 461
Bates v. Railroad Co., 147 Mass. 255, 17 N. E. 633 357
Bauserman v. Blunt, 147 U. S. 657, 13 Sup. Ct. 466, 37 L. Ed. 316..... 188
Beale, In re, 4 Ch. 249..... 396
Bear Lake Irrigation Co. v. Garland, 164 U. S. 1, 11, 17 Sup. Ct. 7, 41 L. Ed. 327 573

Digitized by Google

Page

Beck v. Real Estate Co., 12 C. C. A. 497, 65 Fed. 30 42
Beesley v. Wheeler & Co., 103 Mich. 196, 61 N. W. 658, 27 L. R. A. 266..... 597
Belknap v. Schild, 161 U. S. 10, 16 Sup. Ct. 443, 40 L. Ed. 599.....132, 133, 136, 137
Beloit v. Morgan, 7 Wall. 619, 621, 622, 19 L. Ed. 205 653
Bement v. Harrow Co., 186 U. S. 70, 91, 22 Sup. Ct. 747, 46 L. Ed. 1058..... 545
Ben Adams, The, 2 Ben. 445, 449, Fed. Cas. No. 1,289 216
Benkert v. Feder (C. C.) 34 Fed. 534... 144
Bensley v. Railroad Co., 191 U. S. 492, 24 Sup. Ct. 164, 48 L. Ed. 274..... 274
Berkshire, The, 21 C. C. A. 169, 74 Fed. 906, 910 418
Bernstein v. Meech, 130 N. Y. 354, 29 N. E. 255 284
Berry v. Ransdall, 4 Metc. (Ky.) 292..575, 577
Bigelow v. Bemis, 2 Allen, 496.....573, 577
Bigler v. Morgan, 77 N. Y. 312, 319..... 284
Bird v. U. S., 187 U. S. 118, 124, 23 Sup. Ct. 42, 47 L. Ed. 100..... 460
Blair v. Railroad Co., 66 N. Y. 313, 23 Am. Rep. 55..... 357
Blake v. McKin, 103 U. S. 336, 26 L. Ed. 563 449
Blanchard v. Page, 8 Gray, 281, 286, 290-295 349
Bloch v. Farjieon, 48 C. C. A. 650, 109 Fed. 790 677
Board of Com'rs v. Platt, 25 C. C. A. 87, 91, 79 Fed. 567, 571..... 585
Board of Com'rs of Lake County v. Platt, 25 C. C. A. 87, 91, 79 Fed. 567... 653
Bogk v. Gassert, 149 U. S. 17, 26, 13 Sup. Ct. 738, 37 L. Ed. 631..... 204
Boston & M. R. R. v. Hurd, 47 C. C. A. 615, 108 Fed. 116, 56 L. R. A. 193..... 59
Bostwick v. Railroad Co., 45 N. Y. 712.. 225
Bouldin v. Massie's Heirs, 7 Wheat. 122, 5 L. Ed. 414..... 304
Brandies v. Cochrane, 105 U. S. 262, 26 L. Ed. 989 624
Brantingham v. Fay, 1 Johns. Cas. 264... 18
Breathitt Coal, Iron & Lumber Co. v. Strong, 51 S. W. 189, 21 Ky. Law Rep. 302 .....518, 519, 520, 521
Brick v. Brick, 98 U. S. 514, 516, 25 L. Ed. 256 392
Briggs v. Spaulding, 141 U. S. 132, 11 Sup. Ct. 924, 35 L. Ed. 662..... 214
Brigham v. Nathan, 62 Kan. 243, 62 Pac. 319 188
Broadis v. Broadis (C. C.) 86 Fed. 951.. 5
Brobston v. Penniman, 97 Ga. 527, 25 S. E. 350 413
Bronson v. Kinzie, 1 How. 311, 316, 320, 11 L. Ed. 143.....574, 576
Bronson v. Railroal Co., 1 Wall. 405, 409, 17 L. Ed. 616..... 415
Brown v. Assurance Soc., 75 Minn. 412, 78 N. W. 103, 671, 79 N. W. 968..... 583
Brown v. Ass'n, 172 Mass. 498, 502, 53 N. E. 129 583
Brown v. Bacon, 63 Tex. 595..... 44
Brown v. Guarantee Co., 128 U. S. 403, 410, 9 Sup. Ct. 127, 32 L. Ed. 468..... 86
Brunswick - Balke - Collender Co. v. Thum, 50 C. C. A. 61, 111 Fed. 904.... 448

Page

Buck v. Colbath, 3 Wall. 334, 343, 18 L. Ed. 257 .....44, 69, 70, 71
Buel v. Transfer Co., 45 Mo. 563..... 510
Buffington v. Day, 11 Wall. 113, 20 L. Ed. 122 208
Bullock Co. v. Westinghouse Co., 63 C. C. A. 607, 129 Fed. 105..... 547
Buntin v. Railroad Co. (C. C.) 41 Fed. 744, 749 510
Burgess v. Salmon, 97 U. S. 384, 24 L. Ed. 1104 280
Burgess v. Telegraph Co. (C. C.) 108 Fed. 26 602
Burlington v. Quick, 47 Iowa, 222....654, 656
Burnam v. White, 16 Ky. Law Rep. 241, 22 S. W. 555..... 582
Burnand v. Rodocanachi, L. R. 7 App. Cas. 333 614
Burns v. Sennett & Miller, 99 Cal. 363, 372, 33 Pac. 916 598
Bursinger v. Bank, 67 Wis. 75, 83, 85, 30 N. W. 290, 58 Am. Rep. 848..... 583
Burton v. Driggs, 20 Wall. 124, 22 L. Ed. 299 305
Butler v. Townsend, 126 N. Y. 105, 112, 26 N. E. 1017.....486, 508, 598
Byers v. McAuley, 149 U. S. 608, 13 Sup. Ct. 906, 37 L. Ed. 867..... 164
Byrne v. Railroad Co., 9 C. C. A. 666, 61 Fed. 605, 24 L. R. A. 693..... 567
B. & O. R. R. v. Baugh, 149 U. S. 368, 386, 13 Sup. Ct. 914, 921, 37 L. Ed. 772 370

California Bank v. Kennedy, 167 U. S. 362, 367, 17 Sup. Ct. 831, 42 L. Ed. 198.. 648
California Nat. Bank v. Kennedy, 167 U. S. 362, 17 Sup. Ct. 831, 42 L. Ed. 198.. 621
Callaway v. Allen, 12 C. C. A. 114, 64 Fed. 297 598
Calloway v. Sanford (Tenn.) 35 S. W. 778 527
Cameron v. Railroad Co., 69 Miss. 78, 10 South. 554 577
Cammack v. Lewis, 15 Wall. 643, 21 L. Ed. 244 582
Campbell v. Mayor (C. C.) 81 Fed. 182.. 36
Canal Co. v. Hill, 15 Wall. 94, 21 L. Ed. 64 339
Canter v. Insurance Co., 3 Pet. 307, 7 L. Ed. 688 670
Capron v. Porter, 43 Conn. 383..... 44
Carbonero, The, 58 C. C. A. 553, 122 Fed. 753, 755 421
Carey v. Railroad Co., 150 U. S. 170-179, 14 Sup. Ct. 63, 37 L. Ed. 1041..... 261
Carlton v. Davis, 8 Allen (Mass.) 94... 44
Carnegie Steel Co. v. Iron Co., 185 U. S. 403, 22 Sup. Ct. 698, 46 L. Ed. 968..... 310
Cates v. Allen, 149 U. S. 451, 457, 13 Sup. Ct. 883, 884, 37 L. Ed. 804..... 262
Centaur Co. v. Marshall, 38 C. C. A. 413, 97 Fed. 785 113
Central Nat. Bank v. Stevens, 169 U. S. 432, 18 Sup. Ct. 403, 42 L. Ed. 807..... 70
Central R. Co. v. Keegan, 160 U. S. 259, 16 Sup. Ct. 269, 40 L. Ed. 418..... 486
Central Transp. Co. v. Car Co., 139 U. S. 24, 48, 59, 11 Sup. Ct. 478, 35 L. Ed. 55 648
Central Trust Co. v. Grantham, 27 C. C. A. 570, 83 Fed. 540 71

Digitized by Google

Page

Chamberlain v. Butler, 61 Neb. 730, 738, 86 N. W. 481 563
Chambers v. Tin Plate Co., 64 C. C. A. 129, 129 Fed. 561 .....597, 599
Chattahoochee, The, 21 C. C. A. 162, 74 Fed. 899, 906; 173 U. S. 540, 550, 19 Sup. Ct. 491, 495, 43 L. Ed. 801.....152, 539
Cheeves v. Anders, 87 Tex. 287, 47 Am. St. Rep. 107, 28 S. W. 274..... 582
Chesapeake & O. R. Co. v. Dixon, 179 U. S. 131, 21 Sup. Ct. 67, 45 L. Ed. 121.... 589
Chesapeake & O. R. Co. v. Hennessey, 38 C. C. A. 307, 96 Fed. 713..... 601
Chetwood, In re, 165 U. S. 443, 17 Sup. Ct. 385, 41 L. Ed. 782..... 70
Chew Heong v. U. S., 112 U. S. 536, 5 Sup. Ct. 255, 28 L. Ed. 770..... 433
Chicago v. Robbins, 2 Black, 419, 17 L. Ed. 298 484
Chicago, B. & Q. R. Co. v. Chicago, 166 U. S. 226, 17 Sup. Ct. 581, 41 L. Ed. 979 406
Chicago, etc., R. Co. v. Wallace, 14 C. C. A. 257, 66 Fed. 506, 30 L. R. A. 161 357
Chicago G. W. R. Co. v. Price, 38 C. C. A. 230, 239, 243, 246, 97 Fed. 423, 427, 428, 430.....471, 663
Chicago G. W. R. Co. v. Roddy, 65 C. C. A. 470, 131 Fed. 712..... 663
Chittenden v. Brewster, 2 Wall. 191, 17 L. Ed. 839 163
Choctaw, O. etc. R. Co. v. McDade, 191 U. S. 64, 24 Sup. Ct. 24, 18 L. Ed. 96.. 662
Chrisman v. Partee, 38 Ark. 60..... 90
Christmas v. Russell, 5 Wall. 290, 300, 18 L. Ed. 475 .....574, 577
Christy v. Farlin, 49 Mich. 319, 13 N. W. 607 510
Christy v. Holmes, 57 Ind. 314..... 175
Christy v. Pridgeon, 4 Wall. 196, 18 L. Ed. 322 187
Christy v. Row, 1 Taunt. 300..... 349
Cincinnati Gas Co. v. Western Siemens Co., 152 U. S. 200, 14 Sup. Ct. 523, 38 L. Ed. 411 37
Cincinnati, N. O. & T. P. Ry. v. Interstate Commerce Commission, 162 U. S. 184, 191, 193, 16 Sup. Ct. 700, 703, 704, 40 L. Ed. 935..... 323
Citizens' Bank v. Cannon, 164 U. S. 319, 324, 17 Sup. Ct. 89, 41 L. Ed. 451..... 670
Citizens' Bank v. Farwell, 6 C. C. A. 30, 56 Fed. 539 416
City Nat. Bank v. Hunter, 152 U. S. 512, 516, 14 Sup. Ct. 675, 38 L. Ed. 534..... 670
City of Burlington v. Quick, 47 Iowa, 222 649
City of Chariton v. Holliday, 60 Iowa, 391, 14 N. W. 775.....649, 651
City of Muscatine v. Railroad Co., 79 Iowa, 645, 44 N. W. 909..... 649
Claflin v. Beaver (C. C.) 55 Fed. 576.... 44
Clapp v. Otoe County, 45 C. C. A. 579, 582, 104 Fed. 473, 477..... 582
Clark v. Allen, 11 R. I. 439, 443, 23 Am. Rep. 496 583
Clark v. 506,000 Feet of Lumber, 12 C. C. A. 628, 65 Fed. 236..... 71
Clark v. Patterson, 158 Mass. 388, 391, 33 N. E. 589, 591, 35 Am. St. Rep. 498.. 385, 386, 396

Page

Clarke v. Warehouse Co., 10 C. C. A. 387, 62 Fed. 328..... 670
Clay v. Iseminger, 187 Pa. 108, 41 Atl. 38; 185 U. S. 55, 22 Sup. Ct. 573, 46 L. Ed. 804 573
Clement v. Insurance Co., 101 Tenn. 22, 46 S. W. 561, 564, 42 L. R. A. 247, 70 Am. St. Rep. 650 583
Clinton v. Walliker, 98 Iowa, 655, 68 N. W. 431 655
Close v. Glenwood Cemetery, 107 U. S. 466, 2 Sup. Ct. 267, 27 L. Ed. 408..... 12
Coats v. Thread Co., 149 U. S. 562, 13 Sup. Ct. 966, 37 L. Ed. 847..... 113
Cochrane v. Badische Anilin & Soda Fabrik, 111 U. S. 293, 311, 4 Sup. Ct. 455, 28 L. Ed. 433 637
Coe v. Errol, 116 U. S. 517, 528, 6 Sup. Ct. 475, 479, 29 L. Ed. 715.....321, 322
Coggeshall v. Des Moines, 78 Iowa, 235, 41 N. W. 617, 42 N. W. 650.....657, 658, 659
Cohens v. Virginia, 6 Wheat. 399, 5 L. Ed. 257 567
Columbian, The, 41 C. C. A. 150, 100 Fed. 991, 994 421
Com. v. Huntly, 156 Mass. 236, 30 N. E. 1127, 15 L. R. A. 839..... 433
Com. v. Taylor, 3 Camp. 207..... 129
Comstock, In re, 6 Fed. Cas. 239, No. 3,074 52
Connecticut Mut. Ins. Co. v. Hillmon, 188 U. S. 208, 209, 211, 23 Sup. Ct. 294, 295, 47 L. Ed. 446.....462, 464
Connecticut Mut. Life Ins. Co. v. Schaefer, 94 U. S. 457, 461, 462, 24 L. Ed. 251 .....582, 583
Connolly v. Sewer Pipe Co., 184 U. S. 540, 22 Sup. Ct. 431, 46 L. Ed. 679..... 275
Conrad v. Moorehead, 89 N. C. 31..... 528
Conrader, In re, 9 Am. Bankr. Rep. 85, 118 Fed. 676 501
Conrader v. Cohen, 58 C. C. A. 249, 121 Fed. 801, 9 Am. Bankr. Rep. 619..... 501
Cooper v. Steamboat Co. (D. C.) 18 Fed. 588 668
Copeland v. Bruning, 63 C. C. A. 435, 127 Fed. 550 71
Cortelyou v. Lowe, 49 C. C. A. 671, 111 Fed. 1005 545
Cottrell v. Manlove, 58 Kan. 405, 49 Pac. 519 187
County of Stanislaus v. Canal & Irrigation Co., 192 U. S. 201, 24 Sup. Ct. 241, 48 L. Ed. 406..... 404
Covell v. Heyman, 111 U. S. 176, 4 Sup. Ct. 355, 28 L. Ed. 390..... 71
Cox v. Railroad, 2 Leg. Rep. 168..... 568
Coxe v. Milbrath, 110 Wis. 499, 86 N. W. 174 45
Crafts, Ex parte, 28 S. C. 281, 5 S. E. 718 483, 484
Crane v. C. Crane & Co., 45 C. C. A. 96, 105 Fed. 869 33
Crawford v. Crawford (Kan.) 55 Pac. 842 45
Crawford v. Ritchey, 43 W. Va. 252, 27 S. E. 220 531
Crippen v. Hudson, 3 Kern. 161..... 262
Crocker v. Ball (Kan.) 59 Pac. 691..... 188
Crofford v. Cothran, 2 Sneed, 492..... 510

Digitized by Google

Page

Cromwell v. County of Sac, 94 U. S. 351, 352, 24 L. Ed. 195.....180, 585, 653
Crossman v. Burrill, 179 U. S. 190, 21 Sup. Ct. 38, 45 L. Ed. 106..... 190
Crosswel v. Ass'n, 51 S. C. 103, 28 S. E. 200, 203 583
Crowder, Ex parte, 2 Vern. 706..... 501
Crow Dog, Ex parte, 109 U. S. 556, 3 Sup. Ct. 396, 27 L. Ed. 1030..... 423
Crown Cork & Seal Co. v. Stopper Co., 48 C. C. A. 72, 108 Fed. 847.....436, 442
Cuddy v. Clement, 51 C. C. A. 288, 113 Fed. 454 539
Cumberland Tel. Co. v. Bills, 62 C. C. A. 620, 128 Fed. 272 600
Cumberland Tel. Co. v. Loomis, 87 Tenn. 504, 11 S. W. 356 600
Cunningham v. Railroad Co., 3 Sup. Ct. 292, 609, 27 L. Ed. 992..... 183
Curtis v. Leavitt, 15 N. Y. 9..... 58
Curtis v. Whitney, 13 Wall. 68, 72, 20 L. Ed. 513 574
Curtiss v. Insurance Co., 90 Cal. 245, 27 Pac. 211, 25 Am. St. Rep. 114..... 583
Cutting, Ex parte, 94 U. S. 14, 22, 24 L. Ed. 49 673

Daniel Ball, The, 10 Wall. 557, 565, 566, 19 L. Ed. 999 .....321, 322
Daniels v. Railroad Co., 154 Mass. 349, 28 N. E. 283, 13 L. R. A. 248, 26 Am. St. Rep. 253 61
Daniels v. Tearney, 102 U. S. 415, 419, 26 L. Ed. 187 576
Dashiell v. Grosvenor, 13 C. C. A. 593, 66 Fed. 334, 27 L. R. A. 67; 162 U. S. 425, 16 Sup. Ct. 805, 40 L. Ed. 1025..... 136
Davis v. Pendergast, 16 Blatchf. 565, Fed. Cas. No. 3,647 191
Davis-Colby Ore Roaster Co. v. Steel Co. (C. C.) 128 Fed. 453..... 308
Day v. Woodworth, 13 How. 363, 371, 14 L. Ed. 181 .....155, 608
De La Vergne Co. v. Savings Inst., 175 U. S. 40, 59, 20 Sup. Ct. 20, 44 L. Ed. 65 648
Delaware, The, 14 Wall. 579, 603, 20 L. Ed. 779 347
Delaware, L., etc., R. v. Converse, 139 U. S. 469, 472, 11 Sup. Ct. 569, 35 L. Ed. 213 514
De Lima v. Bidwell, 182 U. S. 1, 21 Sup. Ct. 743, 45 L. Ed. 1041..... 534
Derby, In re, 42 C. C. A. 637, 102 Fed. 808, 814 417
De Silvale v. Kendall, 4 M. & S. 37, 42.. 347
Detroit Post v. McArthur, 16 Mich. 447.. 609
Devlin v. The Mayor, 63 N. Y. 25..... 29
Devries v. Shanahan, 58 C. C. A. 482, 122 Fed. 629 416
Dewdney, Ex parte, 15 Ves. 479, 498.... 396
Diamond Co. v. Railroad Co. (Tex.) 33 S. W. 987 34
Directors, etc. of the Central Railway of Venezuela v. Kisch, Law Rep. 2 H. L. 99 289
Distilled Spirits, The, 11 Wall. 356, 20 L. Ed. 167 125
Dittoe v. Davenport, 74 Iowa, 66, 36 N. W. 895 649

Page

Dixon v. Insurance Co., 166 Mass. 48, 49, 46 N. E. 430 583
Dodge v. Knowles, 114 U. S. 436, 438, 5 Sup. Ct. 1108, 29 L. Ed. 144..... 624
Dolph Case, 138 U. S. 617, 11 Sup. Ct. 412, 34 L. Ed. 1063 33
Domett v. Beckford, 5 B. & Ad. 521, 525 349
Downey v. Hoffer, 110 Pa. 109, 20 Atl. 655 582
Dows v. Bank, 91 U. S. 618, 630, 23 L. Ed. 214 348
Draper v. Davis, 103 U. S. 370, 371, 26 L. Ed. 121 624
Drew v. Bird, Mood & Malk. 156..... 349
Drisko, In re, Fed. Cas. No. 4,090..... 490
Du Bois v. Kirk, 158 U. S. 58, 15 Sup. Ct. 729, 39 L. Ed. 895..... 670
Du Bois v. New York (C. C. A.) 128 Fed. 418 590
Dudley v. Board, 43 C. C. A. 184, 103 Fed. 209 261
Dudley v. The Superior, 1 Newb. Adm. 176, Fed. Cas. No. 4,115..... 266
Duncan v. Cobb, 32 Minn. 460, 21 N. W. 714 573
Dunn v. Daly, 78 Cal. 640, 21 Pac. 377.. 31

Eastern R. Co. v. Insurance Co., 98 Mass. 420 129
East Tennessee Iron & Coal Co. v. Wiggin, 15 C. C. A. 510, 68 Fed. 446..... 527
Eaton v. Super's, 40 Wis. 663..... 573
Eckel v. Renner, 41 Ohio St. 232, 233... 583
E. C. Knight Case, 156 U. S. 16, 15 Sup. Ct. 255, 39 L. Ed. 325..... 493
Eddy, The, 5 Wall. 481, 495, 18 L. Ed. 486 216
Edison Phonograph Co. v. Pike (C. C.) 116 Fed. 863, 867..... 545
Edwards v. Kearzey, 96 U. S. 595, 603, 24 L. Ed. 793 .....575, 576, 577
Eells v. Ross, 12 C. C. A. 205, 64 Fed. 417 40
Eggert, In re, 43 C. C. A. 1, 102 Fed. 735 417
Elkin v. Green, 13 Bush, 612..... 413
Elisler v. Brooks, 54 N. Y. Super. Ct. 73 18
Ensminger v. Powers, 108 U. S. 292, 302, 2 Sup. Ct. 643, 27 L. Ed. 732.....415, 416
Erwin v. Harris, 87 Ga. 336, 13 S. E. 513 348
Evans v. Bank, 134 U. S. 330, 331, 10 Sup. Ct. 493, 33 L. Ed. 917..... 624
Evans v. McCaskill, 41 C. C. A. 577, 101 Fed. 658 261
Evers v. Watson, 156 U. S. 527, 532, 15 Sup. Ct. 430, 39 L. Ed. 520..... 297
Everson v. Powers, 69 N. Y. 527, 42 Am. Rep. 319 31
Eviston v. Cramer, 57 Wis. 570, 15 N. W. 760 600
Ewing v. St. Louis, 5 Wall. 413, 419, 18 L. Ed. 657 399
Eylenfeldt v. Steel Co., 165 Ill. 135, 46 N. E. 266 510

Fabrics Co. v. Smith, 100 U. S. 110, 25 L. Ed. 547 670
Fairgrieve v. Insurance Co., 37 C. C. A. 190, 94 Fed. 686..... 613
Fallbrook Irrigation District v. Bradley, 164 U. S. 111, 139, 17 Sup. Ct. 56, 41 L. Ed. 369 405

Digitized by Google

Page

Farmers' Loan & Trust Co. v. Railroad Co., 177 U. S. 51, 20 Sup. Ct. 564, 44 L. Ed. 687 .....70, 71, 163
Farrell v. U. S., 49 C. C. A. 183, 110 Fed. 942 40
Farrin v. Crawford, Fed. Cas. No. 4,686 677
Feital v. Railroad, 109 Mass. 398, 12 Am. Rep. 720 555
Felton v. Bullard, 37 C. C. A. 1, 94 Fed. 781 102
Felton v. Girardy, 43 C. C. A. 439, 104 Fed. 127 .....601, 602
Fidelity & Deposit Co. v. Courtney, 186 U. S. 342, 360, 22 Sup. Ct. 833, 46 L. Ed. 1193 124
Fiegenbaum, In re, 57 C. C. A. 409, 121 Fed. 69 480
Field v. Clark, 143 U. S. 649-672, 12 Sup. Ct. 495, 36 L. Ed. 294..... 280
Files v. Brown, 59 C. C. A. 403, 406, 412, 124 Fed. 133, 136, 142.....623, 627
First Nat. Bank v. Bank, 65 C. C. A. 406, 131 Fed. 422 414
First Nat. Bank v. Hawkins, 174 U. S. 364, 19 Sup. Ct. 739, 43 L. Ed. 1007..... 621
First Nat. Bank v. King, 60 Kan. 733, 57 Pac. 952 187
First Nat. Bank v. Prager, 34 C. C. A. 51, 91 Fed. 692 263
Fisher, In re, 43 C. C. A. 381, 103 Fed. 860, 51 L. R. A. 292..... 417
Fitzgerald v. Insurance Co., 56 Conn. 116, 13 Atl. 673, 677, 678, 17 Atl. 411, 7 Am. St. Rep. 288 583
Flatley v. Railroad Co., 9 Heisk. 230, 237 510
Fleitas v. Richardson, 147 U. S. 550, 555, 13 Sup. Ct. 495, 37 L. Ed. 276..... 394
Fohrmann v. Traction Co., 63 N. J. Law, 391, 43 Atl. 892 155
Fok Yung Yo v. U. S., 185 U. S. 296, 22 Sup. Ct. 686, 46 L. Ed. 917..... 3
Fonda v. Railroad Co., 71 Minn. 438, 74 N. W. 166, 70 Am. St. Rep. 341..... 506
Fong Yue Ting v. U. S., 149 U. S. 698, 713, 13 Sup. Ct. 1016, 37 L. Ed. 905.... 3, 4
Fontain v. Ravenel, 17 How. 369, 394, 395, 15 L. Ed. 80..... 393
Ford v. Delta, etc. Co., 164 U. S. 662, 674, 17 Sup. Ct. 230, 41 L. Ed. 590..... 231
Fort Dodge Electric Light & Power Co. v. Fort Dodge (Iowa) 89 N. W. 7..... 649
Fowkes v. Ass'n, 3 Best & S. 917, 925..... 126
Fowle v. Torrey, 135 Mass. 87..... 396
Frank Chase, Petitioners, 59 C. C. A. 629, 124 Fed. 753..... 386
Frankel v. Frankel, 173 Mass. 214, 215, 53 N. E. 398, 73 Am. St. Rep. 266..... 389
Franklin Life Ins. Co. v. Hazzard, 41 Ind. 116, 13 Am. Rep. 313..... 582
Fraser v. Jennison, 106 U. S. 191, 1 Sup. Ct. 171, 27 L. Ed. 131 363
Frazier v. Clark, 88 Ky. 260, 10 S. W. 806, 11 S. W. 83..... 31
Freeland v. Heron, 7 Cranch, 147, 3 L. Ed. 297 516
Freeman v. Howe, 24 How. 450, 16 L. Ed. 749 .....69, 70
French v. Edwards, 13 Wall. 506, 20 L. Ed. 702 647
French v. Paving Co., 181 U. S. 324-344, 21 Sup. Ct. 625, 45 L. Ed. 879..... 658

Page

Frost v. Knight, L. R. 7 Exch. 111..... 284
Funk v. Publishing Co., 76 Hun, 497, 27 N. Y. Supp. 1080..... 18
Funk v. McReynolds' Adm'rs, 33 Ill. 481, 497 628
Furth v. Stahl, 205 Pa. 439, 55 Atl. 29... 53

Gaines v. Chew, 2 How. 619, 641, 11 L. Ed. 402 86
Gale v. Bank, 43 C. C. A. 496, 104 Fed. 214 664
Gale Case, 46 C. C. A. 683, 108 Fed. 987.. 665
Galpin v. Page, 3 Sawy. 93, Fed. Cas. No. 5,206 484
Galveston, etc., R. Co. v. Silegman (Tex.) 23 S. W. 299..... 347
General Electric Co. v. Electric Light & Power Co. (C. C.) 96 Fed. 563, 567... 317
General Electric Co. v. Specialty Co., 61 C. C. A. 329, 332, 126 Fed. 755, 756, 758 317, 318
Gertrude, The, 55 C. C. A. 80, 118 Fed. 130, 131, 132 .....418, 421
Gibson v. Railroad Co., 63 N. Y. 449, 20 Am. Rep. 552 601
Gilbert, In re (D. C.) 112 Fed. 951..... 677
Gilbert v. Ackerman, 159 N. Y. 118, 124, 53 N. E. 753, 45 L. R. A. 118.....573, 575
Gilbert v. Hebard, 8 Metc. (Mass.) 129.. 480
Gilbert v. Moose's Adm'r, 104 Pa. 74, 49 Am. Rep. 570 582
Gilbert v. Railroad Co., 38 C. C. A. 408, 97 Fed. 747 506
Gill v. Patton, 118 Iowa, 68, 91 N. W. 904 657, 658
Gladiator, The, 25 C. C. A. 32, 79 Fed. 445, 446, 447 418
Gleason v. Strauss, 5 Kan. App. 80, 48 Pac. 861 47
Globe Refining Co. v. Cotton Oil Co., 190 U. S. 545, 23 Sup. Ct. 754, 47 L. Ed. 1171 294
Golden Rule, The (C. C.) 9 Fed. 334..... 347
Goldsmith v. Insurance Co., 52 C. C. A. 534, 114 Fed. 914 678
Gonzales v. Williams, 118 Fed. 941; 192 U. S. 1, 15, 24 Sup. Ct. 177, 48 L. Ed. 317 4
Good, In re, 3 Am. Bankr. R. 605, 89 C. C. A. 581, 99 Fed. 389..... 417
Gossom v. Donaldson, 18 B. Mon. 230, 238, 68 Am. Dec. 723 628
Grand Trunk R. Co. v. Richardson, 91 U. S. 454, 23 L. Ed. 356..... 130
Grant, In re (D. C.) 106 Fed. 496..... 677
Grant v. Fitchburg, 160 Mass. 15, 35 N. E. 84, 39 Am. St. Rep. 449..... 63
Green v. Mills, 16 C. C. A. 516, 69 Fed. 852, 30 L. R. A. 90..... 261
Greer, Ex parte, 2 D. & Ch. 113..... 386
Griffin v. Colver, 16 N. Y. 489, 69 Am. Dec. 718 292
Griffiths v. Gidlow, 3 Hurl. & N. 648, 655 598
Grignon v. Astor, 2 How. 319, 11 L. Ed. 283 297
Grisar v. McDowell, 6 Wall. 363, 18 L. Ed. 863 279
Grosvenor v. Dashiell (C. C.) 62 Fed. 584 136
Guarantee Co. of North America v. Insurance Co., 59 C. C. A. 376, 378, 379, 124 Fed. 170, 172, 173 629

Digitized by Google

Page

Guaranty Co. v. Railroad Co., 139 U. S. 147, 11 Sup. Ct. 512, 35 L. Ed. 116..... 484
Guffy v. Hukill, 34 W. Va. 49, 11 S. E. 754, 8 L. R. A. 759, 26 Am. St. Rep. 901 529
Gumbel v. Pitken, 124 U. S. 143, 5 Sup. Ct. 616, 28 L. Ed. 1128..... 164

Hager v. Burlington, 42 Iowa, 661..... 647
Haines v. Schultz, 50 N. J. Law, 481, 486, 14 Atl. 488.....609, 610
Haley v. Kilpatrick, 44 C. C. A. 102, 104 Fed. 647 233
Hall v. Stern (C. C.) 20 Fed. 788..... 144
Hall & Long v. Railroad Co., 93 Wall. 367, 20 L. Ed. 594..... 612
Hamilton Gas Light Co. v. Hamilton City, 146 U. S. 258, 13 Sup. Ct. 90, 36 L. Ed. 963 451
Hamlin v. Railroad Co., 24 C. C. A. 272, 78 Fed. 665, 36 L. R. A. 826..... 673
Hammock v. Loan & Trust Co., 105 U. S. 77, 84, 26 L. Ed. 1111..... 231
Handy v. Adams, 25 C. C. A. 430, 80 Fed. 297, 303 670
Hanover Nat. Bank v. Bank, 48 C. C. A. 482, 109 Fed. 421..... 59
Hardwick v. Young (Ky.) 62 S. W. 10... 653
Hardwood v. Wentworth, 162 U. S. 547, 16 Sup. Ct. 890, 40 L. Ed. 1069..... 280
Harkrader v. Wadley, 172 U. S. 148, 19 Sup. Ct. 119, 43 L. Ed. 399..... 71
Hartford Fire Ins. Co. v. Railroad Co., 17 C. C. A. 62, 65, 70 Fed. 201, 203, 30 L. R. A. 193..... 582
Harvey v. Railroad Co., 124 Mass. 424, 26 Am. Rep. 673 294
Hawk v. Railroad Co. (Pa.) 11 Atl. 459.. 601
Hawkins v. Barney, 5 Pet. 457, 466, 8 L. Ed. 190 574
Hawse v. Burgmire, 4 Colo. 313..... 574
Hayden v. Smithville M. Co., 29 Conn. 548 601
Head v. Porter (C. C.) 48 Fed. 481..... 133
Hearing, Succession of, 26 La. Ann. 326, 327 58
Heaton Peninsular Button Fastener Co. v. Specialty Co., 25 C. C. A. 267, 77 Fed. 288, 35 L. R. A. 728.....545, 546, 548
Hedger v. Rennaker, 3 Metc. (Ky.) 255.. 573
Hekking v. Pfaff, 33 C. C. A. 328, 91 Fed. 60, 43 L. R. A. 618..... 483
Helmetag's Adm'r v. Miller, 76 Ala. 183, 52 Am. Rep. 316 582
Henry, In re, 123 U. S. 372, 8 Sup. Ct. 142, 31 L. Ed. 174 464
Hepburn v. Auld, 5 Cranch, 262, 3 L. Ed. 96 89
Hepburn v. Dunlop, 1 Wheat. 179, 4 L. Ed. 65 90
Hepburn v. Elizey, 2 Cranch, 445, 2 L. Ed. 332 36
Herring v. Gage, 12 Fed. Cas. 44..... 36
Herrman, In re, 102 Fed. 753, 754; 46 C. C. A. 77, 106 Fed. 987, 988..... 480
Heusner v. Insurance Co., 47 Mo. App. 336 582
Hewitt v. Filbert, 116 U. S. 142, 144, 6 Sup. Ct. 319, 29 L. Ed. 581..... 624
Hickey v. Taafe, 105 N. Y. 26, 12 N. E. 286 601

Page

Hickory v. U. S., 160 U. S. 408, 16 Sup. Ct. 327, 40 L. Ed. 474..... 458
Highlander, The, 1 Sprague, 510, Fed. Cas. No. 6,476 265
Hilliker v. Hale, 54 C. C. A. 252, 117 Fed. 220 188
Hinckley v. Pittsburgh Co., 121 U. S. 264, 7 Sup. Ct. 875, 30 L. Ed. 967..... 32
Hinckley v. Steel Co., 121 U. S. 264, 271, 7 Sup. Ct. 875, 30 L. Ed. 967.....29, 35
H. M. Whitney, The, 30 C. C. A. 343, 86 Fed. 697, 700, 701.....418, 423
Hobbs v. Bank of Commerce, 37 C. C. A. 513, 96 Fed. 396..... 187
Hochster v. De La Tour, 2 El. & Bl. 678 29, 32, 35
Hogue v. Provision Co., 59 Minn. 39, 43, 60 N. W. 812 583
Holcombe v. Tracy, 2 Minn. 241 (Gil. 201) 573
Hollins v. Brierfield Co., 150 U. S. 371-378, 14 Sup. Ct. 127-130, 37 L. Ed. 1113.. 262
Hollister v. Mfg. Co., 113 U. S. 59, 5 Sup. Ct. 717, 28 L. Ed. 901.....132, 133
Holloway v. Dunham, 170 U. S. 615, 619, 18 Sup. Ct. 784, 42 L. Ed. 1165..... 204
Holmes v. Railroad Co. (D. C.) 5 Fed. 523; 9 Fed. 229..... 483
Holy Trinity Church v. U. S., 143 U. S. 459, 12 Sup. Ct. 511, 36 L. Ed. 226..... 351
Hooe v. Jamieson, 166 U. S. 395, 17 Sup. Ct. 596, 41 L. Ed. 1049..... 363
Hooven, Owens & Rentschler Co. v. John Featherstone's Sons, 49 C. C. A. 229, 234, 111 Fed. 81, 86..... 623
Horbach v. Miller, 4 Neb. 31.....573, 577
Horton v. Maffitt, 14 Minn. 289, 292 (Gil. 216), 100 Am. Dec. 222..... 628
Hosmer v. Railroad Co., 156 Mass. 506, 31 N. E. 652 357
Hovey v. McDonald, 109 U. S. 150, 157, 3 Sup. Ct. 136, 27 L. Ed. 888..... 415
Howard v. Mfg. Co., 139 U. S. 199, 206, 11 Sup. Ct. 500, 503, 35 L. Ed. 147....36, 177
Howard v. Stillwell, 139 U. S. 199, 11 Sup. Ct. 500, 35 L. Ed. 147..... 292
Howell v. Miller, 33 C. C. A. 407, 91 Fed. 129 137
Howell v. Sewing Machine Co., 12 Neb. 177, 10 N. W. 700..... 413
Hubbell v. U. S., 171 U. S. 203, 18 Sup. Ct. 828, 43 L. Ed. 136; 179 U. S. 77, 21 Sup. Ct. 24, 45 L. Ed. 95.....134, 653
Huggins v. Daley, 40 C. C. A. 12, 99 Fed. 606, 48 L. R. A. 320.....528, 529, 531
Hudson v. Bank, 56 C. C. A. 250, 119 Fed. 346 79
Hunt v. Bridge Co., 64 C. C. A. 548, 130 Fed. 302 589
Huntzicker v. Railroad Co., 64 C. C. A. 78, 129 Fed. 548 166
Hurt v. Hollingsworth, 100 U. S. 100, 102, 25 L. Ed. 569..... 623

Idaho, The, 93 U. S. 575, 23 L. Ed. 978... 44
Improvement & R. R. Co. v. Munson, 14 Wall. 442, 20 L. Ed. 867..... 304
Inland & Seaboard Coasting Co. v. Tolson, 139 U. S. 551, 554, 555, 11 Sup. Ct. 653, 35 L. Ed. 270..... 555
Inman v. Railroad Co., 129 U. S. 128, 9 Sup. Ct. 249, 32 L. Ed. 612.....333, 334

Digitized by Google

Page

Insurance Co. v. Bailey, 13 Wall. 616, 20 L. Ed. 501 288
Insurance Co. v. Boon, 95 U. S. 117, 24 L. Ed. 395 130
Insurance Co. v. Eggleston, 96 U. S. 572, 577, 24 L. Ed. 841.....360, 361
Insurance Co. v. Norton, 96 U. S. 240-242, 24 L. Ed. 689..... 360
International, The (D. C.) 30 Fed. 375... 268
International Nav. Co. v. Mfg. Co., 181 U. S. 218, 21 Sup. Ct. 591, 45 L. Ed. 830 151, 152
Iroquois, The, 55 C. C. A. 497, 118 Fed. 1003 241

Jabine v. Sparks, 65 C. C. A. 424, 131 Fed. 440 .....427, 435
Jackson v. Lamphire, 3 Pet. 280, 290, 7 L. Ed. 679 574
Jackson v. Ludeling, 21 Wall. 616, 622, 23 L. Ed. 492 .....628, 630
Jacobs v. George, 150 U. S. 415, 416, 14 Sup. Ct. 159, 37 L. Ed. 1127..... 623
Jacobs v. Insurance Co., 86 Iowa, 145, 53 N. W. 101 509
James v. Campbell, 104 U. S. 356, 26 L. Ed. 786 .....132, 133
Japanese Immigrant Case, The, 189 U. S. 86, 99, 100, 23 Sup. Ct. 611, 47 L. Ed. 721 .....3, 4
Jay v. Adler, 6 R. P. C. 136, 139..... 143
Johnson v. Wald, 35 C. C. A. 522, 93 Fed. 640 677
Jones v. Green, 1 Wall. 330, 17 L. Ed. 553 262

Kalleck v. Deering, 161 Mass. 469, 37 N. E. 450, 42 Am. St. Rep. 421..... 597
Kalorama, The, 10 Wall. 218, 19 L. Ed. 941 .....265, 266
Kann v. Steel Co., 32 C. C. A. 324, 89 Fed. 706 112
Kelley v. Mining Co. (Mont.) 41 Pac. 273 369
Kelly v. Jutte & Foley Co., 44 C. C. A. 274, 104 Fed. 955.....597, 598
Kelly v. Owen, 7 Wall. 496, 19 L. Ed. 283 5
Kennedy v. Gibson, 8 Wall. 498, 19 L. Ed. 476 213
Kent v. Mining Co., 78 N. Y. 159..... 57
Keyser v. Lowell, 54 C. C. A. 574, 578, 580, 117 Fed. 400, 404, 406.....572, 574, 577
Killman v. Railroad Co., 42 C. C. A. 281, 102 Fed. 224 497
Kimball v. Cunningham, 4 Mass. 502, 3 Am. Dec. 230 .....15, 16
Kimberly v. Arms (C. C.) 40 Fed. 548, 550 416
Kincaid v. Price (Colo.) 70 Pac. 153..... 31
King v. Cornell, 106 U. S. 395, 1 Sup. Ct. 312, 27 L. Ed. 60..... 363
Kirby v. Railroad Co., 120 U. S. 130, 137, 138, 7 Sup. Ct. 430, 30 L. Ed. 569..... 392
Kirby v. Tel. Co. (S. D.) 55 N. W. 759, 30 L. R. A. 612, 621, 46 Am. St. Rep. 776 47
Kirtley v. Railroad Co. (C. C.) 65 Fed. 386 506
Kittredge v. Race, 92 U. S. 116, 121, 23 L. Ed. 488 668
Knight v. Coal & Iron Co., 47 Ind. 105, 17 Am. Rep. 692 528
Knowlton v. Moore, 178 U. S. 41, 77, 20 Sup. Ct. 747, 44 L. Ed. 969..... 460

Page

Kohn v. McNulta, 147 U. S. 238, 13 Sup. Ct. 298, 37 L. Ed. 150..... 601
Korn v. Browne, 64 Pa. 55 573
Koshkonong v. Burton, 104 U. S. 668, 675, 26 L. Ed. 886..... 575
Krippendorf v. Hyde, 110 U. S. 276, 4 Sup. Ct. 27, 28 L. Ed. 145..... 164
Krippner v. Biebl, 28 Minn. 139, 9 N. W. 671 130
Kross, In re (D. C.) 96 Fed. 816..... 51

Labette County v. Moulton, 112 U. S. 217, 5 Sup. Ct. 108, 28 L. Ed. 698..... 435
Laclede Bank v. Schuler, 120 U. S. 511, 516, 7 Sup. Ct. 644, 30 L. Ed. 704..... 179
Lake Shore, etc., R. Co. v. Prentice, 147 U. S. 101, 13 Sup. Ct. 261, 37 L. Ed. 97.. 609
Lance v. Apgar, 60 N. J. Law, 447, 448, 38 Atl. 695 154
Land Title & Trust Co. v. Asphalt Co., 62 C. C. A. 23, 38, 39, 43, 44, 127 Fed. 1, 16, 17, 21, 22.....671, 672, 673
Lanier v. McCabe, 2 Fla. 32, 48 Am. Dec. 173 413
Lanning v. Osborne (C. C.) 76 Fed. 319.. 404
Lansing Boiler & Engine Works v. Ryerson & Son, 63 C. C. A. 253, 128 Fed. 701 203
Lantry v. Wallace, 182 U. S. 536, 21 Sup. Ct. 878, 45 L. Ed. 1218..... 288
Last Chance Min. Co. v. Mining Co., 157 U. S. 683, 691, 15 Sup. Ct. 733, 39 L. Ed. 859 180
Leathe v. Thomas, 38 C. C. A. 75, 97 Fed. 136 71
Leavenworth & Galveston Railroad v. U. S., 92 U. S. 733, 23 L. Ed. 634..... 280
Le Barron v. East Boston Ferry, 11 Allen, 312, 317, 87 Am. Dec. 717..... 555
Leeds v. Gas Light Co., 90 N. Y. 26, 29.. 154
Lem Moon Sing v. U. S., 158 U. S. 538, 547, 15 Sup. Ct. 967, 39 L. Ed. 1082.....3, 4
Leonard v. Grant (C. C.) 5 Fed. 11..... 5
Levi v. Allnutt, 15 East. 207..... 129
Levy v. Vaughn, 4 Taunton, 387..... 129
Lewis v. Lewis, 7 How. 776, 12 L. Ed. 909 574
Lincoln v. Orthwein, 57 C. C. A. 540, 120 Fed. 880 32
Lincoln v. Wilamowicz, 7 Ark. 378..... 670
Linn v. McLean, 80 Ala. 368..... 90
Lippincott v. Mitchell, 94 U. S. 767, 770, 24 L. Ed. 315..... 397
Li Sing v. U. S., 180 U. S. 486, 21 Sup. Ct. 449, 45 L. Ed. 634..... 562
Liverpool Steam Co. v. Insurance Co., 129 U. S. 397, 462, 9 Sup. Ct. 469, 479, 32 L. Ed. 788 613
Lloyd v. Railroad Co. (C. C.) 65 Fed. 351, 357 628
Lockhart v. Yeiser, 2 Bush, 231..... 573
Lockman v. Lang, 62 C. C. A. 550, 128 Fed. 279 622
Loew Filter Co. v. Filter Co., 47 C. C. A. 94, 107 Fed. 949, 950..... 546
Logan v. U. S., 144 U. S. 263, 267, 296, 12 Sup. Ct. 617, 36 L. Ed. 429..... 464
Logan Gas Co. v. Gas Co., 61 C. C. A. 359, 126 Fed. 623, 626.....184, 528, 529
Lombard v. Morse, 155 Mass. 136, 140, 29 N. E. 205, 14 L. R. A. 273..... 389

Digitized by Google

Page

Long v. Meriden Brittania Co., 94 Va. 594, 27 S. E. 499 583
Looker v. Maynard, 179 U. S. 46, 21 Sup. Ct. 21, 45 L. Ed. 79..... 12
Loom Co. v. Higgins, 105 U. S. 580, 594, 26 L. Ed. 1177..... 553
Lorillard Co. v. Peper, 30 C. C. A. 496, 86 Fed. 956, 960 113
Lottawanna, The, 20 Wall. 201, 225, 22 L. Ed. 259 415
Louisiana State Bank v. Ledoux (1848) 3 La. Ann. 674 .....124, 125
Louisville v. Bank, 104 U. S. 469, 26 L. Ed. 775 280
Louisville, E. & St. L. R. Co. v. Wilson (Ind.) 21 N. E. 342, 4 L. R. A. 244..... 347
Louisville & N. R. Co. v. Conner, 2 Baxt. 385 568
Louisville & N. R. Co. v. Miller, 43 C. C. A. 436, 104 Fed. 124 602
Low v. Schaffer (Or.) 33 Pac. 679..... 45
L. S. & M. S. R. Co. v. Railroad Co., 149 Ill. 272, 37 N. E. 91..... 36
Ludwig v. Stewart, 32 Mich. 27..... 579
Lyon v. Alley, 130 U. S. 177, 9 Sup. Ct. 480, 32 L. Ed. 899..... 647
L. & N. R. R. Co. v. County Court, 1 Sneed, 639, 696, 62 Am. Dec. 424..... 567

McBride v. Rinard, 172 Pa. 543, 33 Atl. 750 .....353, 354
McCain v. Des Moines, 174 U. S. 168, 19 Sup. Ct. 644, 43 L. Ed. 936..... 451
McCormick v. Shippy, 59 C. C. A. 568, 124 Fed. 48 357
McCoy v. Briant, 53 Cal. 247..... 647
McCracken v. Hayward, 2 How. 608, 612, 11 L. Ed. 397..... 576
McCrary v. Beaudry, 67 Cal. 120, 121, 7 Pac. 265 404
McCreery v. Davis, 44 S. C. 195, 22 S. E. 178, 28 L. R. A. 655, 51 Am. St. Rep. 794 483
McDowell v. McCormick, 57 C. C. A. 401, 121 Fed. 61 71
McElmoyle v. Cohen, 13 Pet. 312, 325, 327, 10 L. Ed. 177.....574, 576
McElroy v. U. S., 164 U. S. 76, 77, 17 Sup. Ct. 31, 41 L. Ed. 355, 356..... 464
McElwain v. Willis, 9 Wend. 548, 556... 262
McFadden v. Milling Co., 33 C. C. A. 354, 355, 357, 97 Fed. 670, 672.....279, 623
McGahey v. Virginia, 135 U. S. 662, 707, 708, 10 Sup. Ct. 972, 34 L. Ed. 304,..575, 577
McGinty v. Reservoir Co., 155 Mass. 183, 29 N. E. 510 597
McGorty v. Telephone Co., 69 Conn. 635, 38 Atl. 359, 61 Am. St. Rep. 62..... 600
McGuire v. Telephone Co., 167 N. Y. 208, 209, 212, 60 N. E. 433, 52 L. R. A. 437.. 601
McHale v. Moore (Kan.) 71 Pac. 522..... 188
McIlroy v. Buckner, 35 Ark. 555, 560..... 669
McIsaac v. Electric Co., 172 Mass. 89, 51 N. E. 524, 70 Am. St. Rep. 244.....600, 601
Mack v. Porter, 18 C. C. A. 527, 72 Fed. 236, 242 45
McLish v. Roff, 141 U. S. 663, 12 Sup. Ct. 118, 35 L. Ed. 893..... 261
McNair v. Platt, 46 Ill. 211, 213..... 412
McQueen v. Kondelin, 61 C. C. A. 650, 127 Fed. 76 455

Page

Maggie J. Smith, The, 123 U. S. 349, 356, 8 Sup. Ct. 159, 31 L. Ed. 175..... 589
Manufacturers' Nat. Bank, In re, 5 Biss. 499, Fed. Cas. No. 9,051..... 212
Marks v. Van Eeghen, 30 C. C. A. 208, 88 Fed. 853 29
Marsh v. Herman, 47 Minn. 537, 50 N. W. 611 597
Martin v. Railroad Co., 168 U. S. 399, 17 Sup. Ct. 603, 41 L. Ed. 1051..... 486
Martin v. Stubbings, 126 Ill. 387, 18 N. E. 657, 660, 9 Am. St. Rep. 620..... 583
Marye v. Strouse (C. C.) 5 Fed. 483, 496 516
Mary Morgan, The (D. C.) 28 Fed. 196-202 266
Mason v. Insurance Co., 49 C. C. A. 106, 110 Fed. 452, 54 L. R. A. 700..... 614
Masterton v. The Mayor, 7 Hill, 61, 71, 42 Am. Dec. 38.....29, 35, 293
Mather v. Rillston, 156 U. S. 391, 15 Sup. Ct. 464, 39 L. Ed. 464 368
Mattingly v. Railroad Co., 158 U. S. 53, 56, 15 Sup. Ct. 725, 39 L. Ed. 894..... 624
Maxfield v. Graveson, 65 C. C. A. 595, 131 Fed. 841 599
Mayor v. Railroad Co., 113 N. Y. 317, 21 N. E. 60 11
Mead v. Bunn, 32 N. Y. 275..... 289
Meade v. Beale, Taney, 339, 361, Fed. Cas. No. 9,371 393
Memphis, etc. R. R. v. Dow, 120 U. S. 287, 301, 7 Sup. Ct. 482, 30 L. Ed. 595.. 612
Memphis Sav. Bank v. Houchens, 52 C. C. A. 176, 115 Fed. 110..... 164
Merchants' Ins. Co., In re, Fed. Cas. No. 9,441 677
Merchants' Nat. Bank v. Braithwiate, 7 N. D. 358, 372, 75 N. W. 244, 66 Am. St. Rep. 653 573
Meriwether v. County Court, 120 U. S. 354, 7 Sup. Ct. 563, 30 L. Ed. 653...420, 434
Merriam v. U. S., 107 U. S. 437, 2 Sup. Ct. 536, 27 L. Ed. 530..... 339
Merritt v. Steel Barge Co., 24 C. C. A. 530, 79 Fed. 228.....71, 164
Merz Capsule Co. v. Capsule Co. (C. C.) 67 Fed. 414, 19 C. C. A. 108, 71 Fed. 787, 31 L. R. A. 415..... 275
Methven v. Light, Heat & Power Co., 13 C. C. A. 362, 66 Fed. 113..... 179
Mexican Prince, The (D. C.) 82 Fed. 488 153
Miller v. State, 15 Wall. 478, 21 L. Ed. 98 12
Mills v. Charleton, 29 Wis. 400, 9 Am. Rep. 578 .....658, 659
Milner v. Bowman, 119 Ind. 448, 454, 21 N. E. 1094, 5 L. R. A. 95..... 584
Milwaukee, etc., R. Co. v. Arms, 91 U. S. 489, 493, 23 L. Ed. 374.....155, 609
Minor v. Bank (1828) 1 Pet. 46, 7 L. Ed. 47 124
Minor v. Tillotson, 1 Pet. 99, 8 L. Ed. 621 304
Missouri Val. Life Ins. Co. v. McCrum, 36 Kan. 146, 59 Am. Rep. 537, 12 Pac. 517 582
Missouri Val. Life Ins. Co. v. Sturges, 18 Kan. 93, 26 Am. Rep. 761..... 582
Mitchell v. Lippincott, 17 Fed. Cas. 503, 506 .....397, 398
Mitchell v. Williams, 45 C. C. A. 265, 106 Fed. 168 143

Digitized by Google

Page

Mobile & M. R. Co. v. Jurey, 111 U. S. 584, 4 Sup. Ct. 566, 28 L. Ed. 527..... 614
Monarch Cycle Co. v. Wheel Co., 44 C. C. A. 523, 526, 105 Fed. 324, 328..... 476
Montgomery v. Railroad Co., 103 Mich. 46, 61 N. W. 543, 29 L. R. A. 287..... 506
Moore v. Bowman, 47 N. H. 494, 502..... 44
Moore v. Ware, 38 Me. 496, 498..... 628
Moorson v. Kymer, 2 M. & S. 318..... 349
Moran v. Sturges, 154 U. S. 256, 277, 14 Sup. Ct. 1019, 1025, 38 L. Ed. 981..... 70, 164, 266
More v. Freeman, Bunb. 205, 207..... 388
Morgan Envelope Co. v. Paper Co., 152 U. S. 430, 14 Sup. Ct. 627, 38 L. Ed. 500.. 546
Morgan's Louisiana R. R. Co. v. Railroad Co. (C. C.) 32 Fed. 525, 530..... 416
Morrin v. Lawler (C. C.) 91 Fed. 693... 416
Mt. Hope, The, 29 C. C. A. 365, 84 Fed. 910, 912 418
Mt. Hope Cemetery Ass'n v. Weidenmann, 139 Ill. 67, 28 N. E. 834..... 31
Murphy v. Red, 64 Miss. 614, 1 South. 761, 762, 763, 60 Am. Rep. 68..... 583
Musselman v. Pratt, 44 Ind. 126..... 47
Mutual Life Ins. Co. v. Allen, 138 Mass. 24, 31, 52 Am. Rep. 245..... 583
Mutual Life Co. v. Hillmon, 145 U. S. 285, 293, 12 Sup. Ct. 909, 36 L. Ed. 706 459, 462, 463
Mutual Life Ins. Co. v. Logan, 31 C. C. A. 172, 87 Fed. 637, 645..... 45
Myers v. Wheelock, 60 Kan. 747, 57 Pac. 956 577

Narramore v. Railroad Co., 37 C. C. A. 499, 96 Fed. 298, 48 L. R. A. 68..... 601
Nashua Savings Bank v. Anglo-American, etc. Co., 189 U. S. 221, 231, 23 Sup. Ct. 517, 47 L. Ed. 782..... 233
National Bank v. Insurance Co., 95 U. S. 673, 24 L. Ed. 563..... 126
National Bank v. Omaha, 96 U. S. 737, 24 L. Ed. 881 624
National Steel Co. v. Lowe, 62 C. C. A. 229, 127 Fed. 311, 315..... 597
Neves v. Scott, 13 How. 268, 271, 14 L. Ed. 140 .....392, 397
Newman v. Arthur, 109 U. S. 132, 3 Sup. Ct. 88, 27 L. Ed. 883..... 559
New Orleans v. Winter, 1 Wheat. 91, 4 L. Ed. 44 363
Newton v. Allis, 12 Wis. 378..... 510
New York Life Ins. Co. v. Russell, 23 C. C. A. 43, 77 Fed. 94..... 678
New York Mut. Life Ins. Co. v. Armstrong, 117 U. S. 591, 597, 6 Sup. Ct. 877, 29 L. Ed. 997..... 583
Nickels v. Com., 64 S. W. 448, 23 Ky. Law Rep. 778 .....519, 523
Nishimura Ekiu v. U. S., 142 U. S. 651, 659, 12 Sup. Ct. 336, 35 L. Ed. 1146.....3, 4
N. K. Fairbank Co. v. Windsor (C. C.) 118 Fed. 96 144
Norcross v. James, 140 Mass. 188, 2 N. E. 946 274
Norcross v. Mercantile Co., 42 C. C. A. 29, 101 Fed. 796 623
Northern Assurance Co. v. Ass'n, 183 U. S. 308, 22 Sup. Ct. 133, 46 L. Ed. 213.. 298

Page

Northern Pac. R. Co. v. Charless, 162 U. S. 359, 16 Sup. Ct. 843, 40 L. Ed. 999 486
Northern Pac. R. Co. v. Hambly, 154 U. S. 349, 14 Sup. Ct. 983, 38 L. Ed. 1009.. 486
Northern Pac. R. Co. v. Peterson, 162 U. S. 346, 16 Sup. Ct. 843, 40 L. Ed. 994... 370, 486
Northern Securities Co. v. U. S., 193 U. S. 197, 24 Sup. Ct. 436, 48 L. Ed. 679.. 494
North of England Ass'n v. Armstrong, L. R. 5 Q. B. 244..... 613
North Star, The, 106 U. S. 17, 27, 1 Sup. Ct. 41, 27 L. Ed. 91..... 458
Northwestern Fuel Co. v. Brock, 139 U. S. 216, 11 Sup. Ct. 523, 35 L. Ed. 151... 540
Norwich Ins. Soc. v. Oil Co., 8 C. C. A. 433, 59 Fed. 984..... 613
Norwood v. Baker, 172 U. S. 269, 19 Sup. Ct. 187, 43 L. Ed. 443.....658, 659

Oakey v. Cook, 41 N. J. Eq. 364, 7 Atl. 503 90
O'Connor v. Rich, 164 Mass. 560, 42 N. E. 111, 49 Am. St. Rep. 483..... 598
Olcott v. Sup'rs, 16 Wall. 689, 21 L. Ed. 382 484
Old Colony R. R. v. Wilder, 137 Mass. 536 225
Olive Mount, The (D. C.) 50 Fed. 563..... 268
Oliver v. Platt, 3 How. 333, 411, 11 L. Ed. 622 86
Olmsted v. Keyes, 85 N. Y. 593, 598..... 583
Olympia, The, 9 C. C. A. 393, 61 Fed. 120 497
One Pearl Chain v. U. S., 59 C. C. A. 499, 123 Fed. 371..... 696
Oregon, The, 158 U. S. 186, 200, 201, 202, 203, 15 Sup. Ct. 804, 39 L. Ed. 943..... 421
Oregon Steam Nav. Co. v. Winsor, 20 Wall. 64, 22 L. Ed. 315..... 80
O'Rourke v. 221 Tons of Coal (D. C.) 1 Fed. 619, 624 347
Orton v. Smith, 18 How. 263, 15 L. Ed. 393 .....162, 163
Osborne v. Florida, 164 U. S. 650, 17 Sup. Ct. 214, 41 L. Ed. 586..... 324
Osborne v. Lindstrom, 9 N. D. 1, 8, 9, 81 N. W. 72, 46 L. R. A. 715, 81 Am. St. Rep. 516 .....573, 579
Osburn v. Lyons, 104 Iowa, 160, 73 N. W. 650 .....657, 658
Ottumwa B. & C. Co. v. Ainley, 109 Iowa, 386, 80 N. W. 510.....649, 650
Owensboro v. Waterworks Co., 191 U. S. 358, 24 Sup. Ct. 82, 48 L. Ed. 217..... 405

Pahquioque Bank v. Bank, 36 Conn. 325, 4 Am. Rep. 80 213
Paper Bag Cases, 105 U. S. 766, 772, 26 L. Ed. 959 670
Parker v. Phetteplace, 2 Cliff. 70, Fed. Cas. No. 10,746..... 398
Patillo v. Com. Co., 47 C. C. A. 637, 644, 645, 108 Fed. 723, 730, 731..... 511
Patton v. Railroad Co., 89 Tenn. 372, 15 S. W. 919, 12 L. R. A. 184, 179 U. S. 658, 660, 663, 21 Sup. Ct. 275, 45 L. Ed. 361 .....102, 103, 471, 568
Peck & Co. v. Metal Roofing & C. Co. (Mo.) 70 S. W. 169..... 31
Peirce v. Tobey, 5 Metc. (Mass.) 168..... 573

Digitized by Google

Page

Pennoyer v. Neff, 95 U. S. 732, 24 L. Ed. 565 483
Pennsylvania Co. v. Roy, 102 U. S. 451, 458, 26 L. Ed. 141 176
Pennsylvania R. R. Co. v. Knight, 192 U. S. 21, 24 Sup. Ct. 202, 48 L. Ed. 325 324
Pennypacker v. Jones, 106 Pa. 237..... 292
People v. Bartels, 138 Ill. 322, 332, 27 N. E. 1091 207
People v. Colmere, 23 Cal. 632..... 47
People v. Coyne, 116 Cal. 295, 48 Pac. 218 47
People's Sav. Bank v. Smith & Co., 114 Ga. 185, 188, 39 S. E. 920..... 413
Perkins v. Ermel, 2 Kan. 325..... 47
Perry v. Thompson, 98 Mass. 249..... 225
Persian Monarch, The, 5 C. C. A. 117, 55 Fed. 333 598
Peschel v. Railroad Co., 62 Wis. 338, 21 N. W. 269 597
Petigru v. Ferguson, 6 Rich. Eq. 380..483, 484
Petroleum Co. v. Mfg. Co., 89 Tenn. 381, 18 S. W. 65.....528, 530
Phelps v. Ass'n, 50 C. C. A. 339, 112 Fed. 453, 61 L. R. A. 717.....163, 164
Philadelphia, etc. R. R. Co. v. Quigley, 21 How. 202, 213, 16 L. Ed. 73.....155, 608
Phoenix Ins. Co. v. Transportation Co., 117 U. S. 312, 321, 6 Sup. Ct. 750, 29 L. Ed. 873 .....332, 613
Pierce v. Railroad Co., 173 U. S. 1, 19 Sup. Ct. 335, 43 L. Ed. 591..... 31
Pietro G., The (D. C.) 39 Fed. 366..... 217
Pillsbury v. Flour Mills Co., 12 C. C. A. 432, 64 Fed. 841..... 108
Pittsburg, F. W. & C. R. Co. v. Shaeffer (1868) 59 Pa. 350, 356, 357..... 124
Pittsburg Meter Co. v. Supply Co., 48 C. C. A. 580, 109 Fed. 644..... 117
Platt v. Wilmot, 24 Sup. Ct. 542, 48 L. Ed. 809 187
Plymouth Min. Co. v. Canal Co., 118 U. S. 264, 269, 6 Sup. Ct. 1034, 30 L. Ed. 232 623
Polk's Lessee v. Wendal, 9 Cranch, 87, 95, 97, 3 L. Ed. 665.....518, 519, 522
Pollock v. Insurance Co. (Mich.) 86 N. W. 1017 678
Pond v. U. S., 49 C. C. A. 582, 111 Fed. 989 43
Porter v. Price, 80 Fed. 655, 657, 658, 659, 660, 26 C. C. A. 70, 72, 73, 74, 75; 33 C. C. A. 196, 197, 198, 90 Fed. 631, 632..511, 516
Postum Cereal Co. v. Health Food Co., 56 C. C. A. 360, 119 Fed. 848, 852....108, 113
Potomac, The, 105 U. S. 630, 634, 26 L. Ed. 1194..... 613
Potter Drug & Chemical Corp. v. Soap Co. (C. C.) 102 Fed. 490..... 111
Potts v. Creager, 155 U. S. 606, 15 Sup. Ct. 194, 39 L. Ed. 275..... 310
Powell v. Dewey, 123 N. C. 103, 68 Am. St. Rep. 818, 31 S. E. 381..... 582
Power v. Kitching, 10 N. D. 254, 86 N. W. 737, 88 Am. St. Rep. 691..... 577
Powers v. Ass'n (C. C.) 86 Fed. 705.. 163
Price v. Bank, 62 Kan. 743, 64 Pac. 639.. 582
Price v. Hopkin, 13 Mich. 318, 324.....573, 575
Prudential Ins. Co. v. Liersch, 122 Mich. 436, 81 N. W. 258..... 583
Pullman Co. v. Adams, 189 U. S. 420, 23 Sup. Ct. 494, 47 L. Ed. 877..... 324

Page

Putney v. Whitmire (C. C.) 66 Fed. 388 263

Railroad v. Dies, 98 Tenn. 655, 41 S. W. 860 .....565, 567
Railroad v. McDonough, 97 Tenn. 255, 37 S. W. 15..... 569
Railroad v. Pratt, 85 Tenn. 9, 1 S. W. 618 569
Railroad v. Pugh, 95 Tenn. 419, 32 S. W. 311 568
Railroad v. Scales, 2 Lea, 688..... 568
Railroad v. Smith, 6 Heisk. 174..... 566
Railroad v. Swaney, 5 Lea, 119, 121..... 568
Railroad v. Troxlee, 1 Lea, 520..... 568
Railroad Co. v. Baugh, 149 U. S. 368, 13 Sup. Ct. 914, 37 L. Ed. 772..... 368
Railroad Co. v. Campbell, 170 Ill. 163, 167, 49 N. E. 314..... 510
Railroad Co. v. Cox, 145 U. S. 593, 601, 606, 12 Sup. Ct. 905, 36 L. Ed. 829.... 509
Railroad Co. v. Fort, 17 Wall. 553, 558, 21 L. Ed. 739 167
Railroad Co. v. Jones, 149 Ill. 361, 37 N. E. 247, 24 L. R. A. 141, 41 Am. St. Rep. 278 510
Railroad Co. v. Lockwood, 11 Wall. 357, 21 L. Ed. 627..... 334
Railroad Co. v. Pollard, 22 Wall. 341, 22 L. Ed. 877 555
Railroad Co. v. Smith, 81 Ala. 229, 1 South. 723 510
Railroad Co. v. Stout, 17 Wall. 657, 662, 21 L. Ed. 745, 748.....61, 62
Railroad Co. v. Wilson, 90 Tenn. 271, 16 S. W. 613, 13 L. R. A. 364, 25 Am. St. Rep. 693 ..... 566, 567
Railroad Co. v. Wyler, 158 U. S. 285, 289, 298, 15 Sup. Ct. 877, 39 L. Ed. 983..... 509
Railroad Equipment Co. v. Railroad Co., 34 C. C. A. 519, 522, 92 Fed. 541, 544.. 624
Ramish v. Kirschbraun, 107 Cal. 659, 661, 40 Pac. 1045..... 348
Randall v. Railroad, 109 U. S. 478, 482, 3 Sup. Ct. 322, 27 L. Ed. 1003..... 601
Randolph v. Scruggs, 190 U. S. 533, 23 Sup. Ct. 710, 47 L. Ed. 1165..... 53
Rankin v. Bank, 188 U. S. 557, 23 Sup. Ct. 372, 47 L. Ed. 594..... 665
Redfield v. Iron Co., 110 U. S. 174, 3 Sup. Ct. 570, 28 L. Ed. 109..... 540
Reeside, The, 2 Sumn. 567, Fed. Cas. No. 11,657 346
Register v. Reid, 72 Ky. 103, 106..... 518, 519, 520, 521, 522, 523
Remington v. Hudson, 64 Kan. 45, 67 Pac. 636 188
Removal Cases, 100 U. S. 457, 25 L. Ed. 593 363
Renner v. Bank, 9 Wheat. 581, 682, 6 L. Ed. 166 304
Resolute, The, 168 U. S. 441, 18 Sup. Ct. 112, 42 L. Ed. 533..... 266
Reubin v. Cohen, 48 Cal. 545..... 413
Reynolds v. Insurance Co., 47 N. Y. 597, 604 126
Richards v. Rough, 53 Mich. 212, 18 N. W. 785 601
Richman v. Sup'rs, 70 Iowa, 627, 26 N. W. 24; 77 Iowa, 513, 42 N. W. 422, 4 L. R. A. 445, 14 Am. St. Rep. 308..655, 656

Digitized by Google

Page

Rider v. Railroad Co. (N. Y.) 63 N. E. 836, 58 L. R. A. 125 506
Riggs v. Johnson Co., 6 Wall. 166, 18 L. Ed. 768 163
Riggs v. Taylor, 4 Wheat. 486, 6 L. Ed. 141 304
Rittler v. Smith (Md.) 16 Atl. 890, 892, 893 583
Roberts v. Graham, 6 Wall. 578, 581, 18 L. Ed. 791 233
Roberts v. Langenbach, 56 C. C. A. 253, 119 Fed. 349 183
Rochester Lantern Co. v. Press Co., 135 N. Y. 209, 31 N. E. 1018 293
Rochford, In re, 59 C. C. A. 388, 393, 124 Fed. 182, 187 626
Roehm v. Horst, 178 U. S. 1, 21, 20 Sup. Ct. 780, 788, 44 L. Ed. 953 .....29, 32
Roemer v. Simon, 95 U. S. 214, 220, 24 L. Ed. 384 553
Rogers v. Durant, 106 U. S. 644, 1 Sup. Ct. 623, 27 L. Ed. 308 304
Rome Planing Mill, In re (D. C.) 96 Fed. 812 677
Roos v. Railroad Co., 199 Pa. 378, 49 Atl. 344 333
Rose v. Stephens & Condit Co. (C. C.) 11 Fed. 438 555
Rothwell v. Dewees, 2 Black, 613, 619, 17 L. Ed. 309 628
Rouse, Hazard & Co., In re, 33 C. C. A. 356, 91 Fed. 96 417
Routon v. Railroad Co., 1 Tenn. Cas. 528 568
Ruby v. Atkinson, 35 C. C. A. 458, 93 Fed. 577 623
Russell v. Clark, 7 Cranch, 69, 3 L. Ed. 271 258
Russell v. Farley, 105 U. S. 433, 437, 26 L. Ed. 1060 670
Russell v. Lumber Co., 45 Minn. 376, 48 N. W. 3 .....573, 577
Russell v. Southard, 12 How. 138, 147, 13 L. Ed. 927 392

Sage v. Railroad Co., 96 U. S. 712, 715, 24 L. Ed. 641 624
St. John v. Insurance Co., 13 N. Y. 31, 40, 64 Am. Dec. 529 583
St. Johns, The (D. C.) 101 Fed. 469, 474, 475 613
St. Louis Cordage Co. v. Miller, 61 C. C. A. 477, 126 Fed. 495, 511, 63 L. R. A. 551 .....662, 663
St. Louis R. Co. v. Shumacher, 152 U. S. 77, 81, 14 Sup. Ct. 479, 38 L. Ed. 361.. 506
St. Paul etc. R. Co. v. Drake, 19 C. C. A. 252, 72 Fed. 945 44
Samuel Dillaway, The, 38 C. C. A. 675, 98 Fed. 138, 141 418
Sanders v. Van Zeller, 4 Q. B. 260, 284.... 349
San Diego Land & Town Co. v. Jasper, 189 U. S. 439, 446, 23 Sup. Ct. 571, 47 L. Ed. 892 406
San Diego Land & Town Co. v. National City (C. C.) 74 Fed. 79, 174 U. S. 739, 753, 19 Sup. Ct. 804, 810, 43 L. Ed. 1154 404, 405
Sands v. Taylor, 5 Johns. 395, 410, 4 Am. Dec. 374 284

Page

Saranac Land & Timber Co. v. Comptroller, 177 U. S. 318, 20 Sup. Ct. 642, 44 L. Ed. 786 575
Schenectady & Saratoga Plank Road Co. v. Thatcher, 11 N. Y. 102, 114 13
Schlamp v. Berner's Adm'r, 21 Ky. Law Rep. 324, 51 S. W. 312 582
Schonfield v. Turner, 75 Tex. 324, 12 S. W. 626, 7 L. R. A. 189 583
Schuff v. Pflanz, 99 Ky. 97, 35 S. W. 132.. 435
Schurz v. Cook, 148 U. S. 411, 13 Sup. Ct. 645, 37 L. Ed. 498 12
Scott v. Neely, 140 U. S. 106, 11 Sup. Ct. 712, 35 L. Ed. 358 262
Scovill v. Glasner, 79 Mo. 449, 453 510
Seattle Nat. Bank v. Pratt (C. C.) 103 Fed. 62; 49 C. C. A. 662, 111 Fed. 841.. 188
Seeligson v. Philbrick (C. C.) 30 Fed. 600 348
Seminole, The (D. C.) 42 Fed. 924 267
Servia, The, 149 U. S. 144, 153, 13 Sup. Ct. 817, 37 L. Ed. 681 423
Sexton v. The Troy, 1 Newb. Adm. 176, Fed. Cas. No. 4,115 266
Shankland v. Washington, 5 Pet. 390, 8 L. Ed. 166 298
Shepard v. De Bernales, 13 East, 565..... 349
Shirley v. Watts, 3 Atk. 200 262
Shirreff v. Wilks, 1 East, 48 413
Sias v. Lighting Co. (Vt.) 50 Atl. 554.. 600
Sicard v. Davis, 6 Pet. 124, 8 L. Ed. 342.. 509
Silvia, The, 171 U. S. 462, 19 Sup. Ct. 7, 43 L. Ed. 241 153
Simmons v. Saul, 138 U. S. 439, 448, 11 Sup. Ct. 369, 34 L. Ed. 1054 .....297, 484
Simpson v. Bank, 63 C. C. A. 371, 129 Fed. 257, 260 .....622, 624
Simpson v. Dall, 3 Wall. 460, 18 L. Ed. 265 304
Singer v. Wilson, L. R. App. Cas. 389..... 143
Sinking Fund Cases, 99 U. S. 720, 25 L. Ed. 496 12
Small v. Foley, 8 Colo. App. 435, 450, 47 Pac. 64, 70 575
Smelting Co. v. Kemp, 104 U. S. 636, 648, 653, 26 L. Ed. 875 .....519, 523
Smith v. Loag, 132 Pa. 301, 19 Atl. 137.. 154
Smith v. Morrison, 22 Pick. 430 573
Smith v. Packard, 12 Wis. 371 577
Smith v. People, 47 N. Y. 330 433
Smith v. Railroad Co., 99 U. S. 398, 401, 25 L. Ed. 437 262
Smith v. Shriver, 3 Wall. Jr. 219, Fed. Cas. No. 13,108 398
Smyth v. Ames, 169 U. S. 466, 524, 18 Sup. Ct. 418, 42 L. Ed. 819 406
Social Circle Case, 162 U. S. 184, 191, 193, 16 Sup. Ct. 700, 703, 704, 40 L. Ed. 935.... 323
Societe Anonyme v. Distilling Co. (C. C.) 46 Fed. 921 144
Sohn v. Waterson, 17 Wall. 596, 21 L. Ed. 737 .....572, 574
Solomons v. U. S., 137 U. S. 342, 348, 11 Sup. Ct. 88, 34 L. Ed. 667 .....133, 134
Solvay Process Co. v. Alkali Co., 33 C. C. A. 285, 90 Fed. 818 553
Sommer v. Conhaim (Sup.) 54 N. Y. Supp. 146 31
Souder v. Society (Md.) 20 Atl. 137, 138 583

Digitized by Google

Page

Southern Minnesota Ry. Extension Co. v. Railroad Co., 5 C. C. A. 249, 55 Fed. 690 653
Southern Pac. Co. v. Pool, 160 U. S. 438, 440, 16 Sup. Ct. 338, 40 L. Ed. 485..471, 514
Southern Pac. Co. v. Schoer, 52 C. C. A. 268, 275, 114 Fed. 466, 473..... 475
Southern Pac. R. R. v. U. S., 168 U. S. 1, 48, 18 Sup. Ct. 18, 42 L. Ed. 355..... 653
Southern R. Co. v. Elder, 26 C. C. A. 615, 81 Fed. 791 569
Southwark, The, 191 U. S. 1, 24 Sup. Ct. 1, 48 L. Ed. 65..... 151
Speer v. Board, 32 C. C. A. 101, 114, 88 Fed. 749, 762 582
Sprott v. Reid, 3 G. Greene, 489, 56 Am. Dec. 549 576
S. S. Osborne, The, 105 U. S. 447, 450, 26 L. Ed. 1065 415
Stanton v. Embry, 93 U. S. 548, 23 L. Ed. 983 71
Stanton v. Small, 3 Sandf. 230..... 284
Stapp v. Steamboat Swallow, 1 Bond, 190, Fed. Cas. No. 13,305..... 266
Star Brass Works v. Electric Co., 49 C. C. A. 409, 111 Fed. 398, 400..... 317
Starr v. U. S., 164 U. S. 627, 17 Sup. Ct. 223, 41 L. Ed. 577..... 458
State v. Columbia George (Or.) 65 Pac. 604, 610 40
State v. Rotwitt, 17 Mont. 41, 41 Pac. 1004 433
State v. Stoll, 17 Wall. 425, 21 L. Ed. 650 433
Statham's Case, 93 U. S. 24, 23 L. Ed. 789 360
Steamboat Co. v. Brockett, 121 U. S. 637, 7 Sup. Ct. 1039, 30 L. Ed. 1049..... 46
Stebbins v. Duncan, 105 U. S. 43, 27 L. Ed. 641 305
Steelsmith v. Gartlan, 45 W. Va. 27, 29 S. E. 978, 44 L. R. A. 107..... 528
Steinback v. Diepenbrock, 37 N. Y. Supp. 279, 280, 1 App. Div. 417..... 583
Stephens v. Cherokee Nation, 174 U. S. 445, 477, 480, 19 Sup. Ct. 722, 43 L. Ed. 1041 .....231, 572
Sterling Remedy Co. v. Mfg. Co., 25 C. C. A. 314, 80 Fed. 105..... 108
Stern, In re, 54 C. C. A. 60, 116 Fed. 604 29
Stevenson v. Polk, 71 Iowa, 288, 32 N. W. 346 90
Stewart v. Ferguson, 34 App. Div. 515, 54 N. Y. Supp. 615 486
Stickney v. Wilt, 23 Wall. 150, 23 L. Ed. 50 416
Stine v. Bennett, 13 Minn. 153 (Gil. 138) 573, 577
Stockton v. Ford, 18 How. 418, 15 L. Ed. 395 180
Stokes v. Saltonstall, 13 Pet. 181, 10 L. Ed. 115 555
Stollenwerck v. Thacher, 115 Mass. 224, 226 348
Stone v. U. S., 12 C. C. A. 451, 452, 64 Fed. 667, 672 464
Stone v. Wisconsin, 94 U. S. 181, 24 L. Ed. 102 398
Strike v. Insurance Co., 95 Wis. 583, 70 N. W. 819, 820 583
Sturges v. Crowninshield, 4 Wheat. 122, 197, 4 L. Ed. 529..... 576

Page

Supreme Council Catholic K. of A. v. Fidelity & Casualty Co., 11 C. C. A. 96, 63 Fed. 48, 59 125
Swarts v. Siegel, 54 C. C. A. 399, 402, 117 Fed. 13, 16..... 626
Swift v. Meyers (C. C.) 37 Fed. 43..... 483
Sykes v. Chadwick, 18 Wall. 141, 146, 147, 148, 21 L. Ed. 824, 826.....390, 391

Talbot, In re (D. C.) 110 Fed. 924....385, 399
Tannage Patent Co. v. Zahn, 17 C. C. A. 552, 70 Fed. 1003 310
Taylor v. Bank (1829) 2 J. J. Marsh. (Ky.) 564 124
Terry v. Anderson, 95 U. S. 628, 632, 633, 24 L. Ed. 365.....574, 575, 577
Tewksbury v. Howard, 138 Ind. 111, 37 N. E. 358 90
Texas, etc., R. R. Co. v. Archibald, 170 U. S. 665, 672, 18 Sup. Ct. 777, 42 L. Ed. 1188 .....369, 601
Texas & P. R. Co. v. Barrett, 166 U. S. 617, 17 Sup. Ct. 707, 41 L. Ed. 1136..102, 103
Texas & P. Ry. v. Commerce Commission, 162 U. S. 197, 212, 16 Sup. Ct. 666, 672, 40 L. Ed. 940..... 322
Thomas v. County of Scotland, 3 Dill. 7, Fed. Cas. No. 13,909..... 398
Thomas v. Stetson, 62 Ill. 537 413
Thompson v. Railroad Co. (N. Y.) 70 N. E. 213 327
Thompson v. Whitman, 18 Wall. 457, 21 L. Ed. 897 483
Thomson v. Wooster, 114 U. S. 104, 114, 5 Sup. Ct. 788, 793, 29 L. Ed. 105..... 180
Thomson-Houston Electric Co. v. Brass Co., 26 C. C. A. 107, 116, 80 Fed. 712, 721, 722 .....546, 548
Thomson-Houston Electric Co. v. Railroad Co., 22 C. C. A. 1, 75 Fed. 1005, 1008 548
Times Pub. Co. v. Carlisle, 36 C. C. A. 475, 493, 94 Fed. 762, 780 464
Tompkins v. Catawba Mills (C. C.) 82 Fed. 782, 783 263
Toof v. Martin, 13 Wall. 40, 20 L. Ed. 481 677
Totten v. Bucy, 57 Md. 450..... 330
Towle v. Kettell, 5 Cush. 18..... 191
Townsend v. Todd, 91 U. S. 452, 23 L. Ed. 413 398
Transportation Co. v. Downer, 11 Wall. 129, 134, 20 L. Ed. 160..... 555
Transportation Line v. Hope, 95 U. S. 297, 24 L. Ed. 477..... 36
Travellers' Ins. Co. v. McConkey, 127 U. S. 661, 666, 8 Sup. Ct. 1360, 32 L. Ed. 308 126
Tremolo Patent, The, 23 Wall. 518, 23 L. Ed. 97 144
Trenton, &c. Ins. Co. v. Johnson, 24 N. J. Law, 576, 585..... 583
Trinidad Asphalt Pav. Co. v. Robinson (C. C.) 52 Fed. 347..... 663
Troy Laundry Mach. Co. v. Dolph, 138 U. S. 617, 11 Sup. Ct. 412, 34 L. Ed. 1083 33
Truscott v. Cattle Co., 19 C. C. A. 374, 73 Fed. 64 42
Tsoi Sim v. U. S., 54 C. C. A. 154, 116 Fed. 920 5

Digitized by Google

Page

Tubular Rivet & Stud Co. v. O'Brien (C. C.) 93 Fed. 200 545
Turner v. Malone, 24 S. C. 398..... 483
Turner v. New York, 168 U. S. 90, 94, 18 Sup. Ct. 38, 42 L. Ed. 392.....575, 577
Tuttle v. Polk, 84 Iowa, 12, 50 N. W. 38 658
Tuttle v. Polk & Hubbell, 92 Iowa, 429, 60 N. W. 733 649
Tuttle v. Railroad Co., 122 U. S. 189, 7 Sup. Ct. 1166, 30 L. Ed. 1114..... 601

Uhl v. Reynolds, 64 S. W. 498, 499, 503, 504, 23 Ky. Law Rep. 759, 761, 767, 769 519, 521, 522, 523
Umbria, The, 166 U. S. 404, 17 Sup. Ct. 610, 41 L. Ed. 1053 421
Union Pac. R. Co. v. Jarvi, 3 C. C. A. 433, 69 Fed. 65 368
Union Pac. R. Co. v. McDonald, 152 U. S. 262, 283, 14 Sup. Ct. 619, 38 L. Ed. 434 514
Union Pac. R. Co. v. Wyler, 158 U. S. 285, 15 Sup. Ct. 877, 39 L. Ed. 983..... 569
Union Pac. Ry. v. McDonald, 152 U. S. 262, 14 Sup. Ct. 619, 38 L. Ed. 434....61, 62
U. S. v. Ass'n, 166 U. S. 328, 17 Sup. Ct. 554, 41 L. Ed. 1007; 171 U. S. 558, 19 Sup. Ct. 25, 31, 43 L. Ed. 259.....491, 494
U. S. v. Behan, 110 U. S. 339, 344, 4 Sup. Ct. 81, 28 L. Ed. 168..... 177
U. S. v. Burns, 12 Wall. 246, 20 L. Ed. 388 133
U. S. v. Chu Chee, 35 C. C. A. 613, 93 Fed. 797 562
U. S. v. Chun Hoy, 50 C. C. A. 57, 111 Fed. 899 562
U. S. v. E. C. Knight Co., 156 U. S. 1, 15 Sup. Ct. 249, 39 L. Ed. 325..... 274
U. S. v. Flournoy Live Stock & Real Estate Co. (C. C.) 69 Fed. 886..... 40
U. S. v. Freeman, 3 How. 556, 11 L. Ed. 724 .....534, 535
U. S. v. Freight Ass'n, 166 U. S. 290, 17 Sup. Ct. 540, 41 L. Ed. 1007..... 80
U. S. v. Gooding, 12 Wheat. 460, 478, 6 L. Ed. 693 455
U. S. v. Hough, 103 U. S. 71, 72, 73, 26 L. Ed. 305 476
U. S. v. Jahn, 155 U. S. 109, 15 Sup. Ct. 39, 39 L. Ed. 87 261
U. S. v. Kellar (C. C.) 13 Fed. 82..... 5
U. S. v. Kirkpatrick (1824) 9 Wheat. 720, 736, 6 L. Ed. 199..... 124
U. S. v. Lacher, 134 U. S. 624, 628, 10 Sup. Ct. 625, 33 L. Ed. 1080..... 231
U. S. v. Leathers, 6 Sawy. 17, Fed. Cas. No. 15,581 279
U. S. v. Lee Yen Tai, 51 C. C. A. 299, 113 Fed. 465 80
U. S. v. Live Stock & Real Estate Co. (C. C.) 69 Fed. 886; 71 Fed. 576..... 42
U. S. v. Logan (C. C.) 105 Fed. 240.... 40
U. S. v. Lung Hong (D. C.) 105 Fed. 188 562
U. S. v. Marchant, 12 Wheat. 480, 481, 6 L. Ed. 700 460
U. S. v. Morrison, 4 Pet. 124, 7 L. Ed. 804 398
U. S. v. Mullin (D. C.) 71 Fed. 685..... 42
U. S. v. Mullins, 56 C. C. A. 238, 119 Fed. 334 331

Page

U. S. v. One Pearl Necklace, 49 C. C. A. 287, 111 Fed. 164, 56 L. R. A. 130.. 604
U. S. v. Palmer, 128 U. S. 262, 9 Sup. Ct. 104, 32 L. Ed. 442 134
U. S. v. Payne (D. C.) 8 Fed. 883..... 280
U. S. v. Pipe & Steel Co., 29 C. C. A. 141, 85 Fed. 271, 46 L. R. A. 122..... 276
U. S. v. Railroad, 164 U. S. 526, 541, 17 Sup. Ct. 165, 41 L. Ed. 541..... 231
U. S. v. Rickert, 188 U. S. 432, 23 Sup. Ct. 478, 47 L. Ed. 532.....40, 45
U. S. v. Schurz, 102 U. S. 407, 26 L. Ed. 219 668
U. S. v. Speed, 8 Wall. 77, 19 L. Ed. 449 35
U. S. v. Sturgeon, 6 Sawy. 29, Fed. Cas. No. 16,412 279
U. S. v. Swift & Co. (C. C.) 122 Fed. 534 494
U. S. v. Telephone Co., 128 U. S. 252, 9 Sup. Ct. 90, 32 L. Ed. 450..... 36
U. S. v. Treadwell (D. C.) 15 Fed. 532.. 668
U. S. v. Wimans (C. C.) 73 Fed. 72..... 42
U. S. v. Wong Dep Kan (D. C.) 57 Fed. 296 562
U. S. v. Yamasaka, 40 C. C. A. 454, 100 Fed. 404 3
U. S. v. Yong Yew (D. C.) 88 Fed. 832.. 562
United States Bank v. Binney, 5 Mason, 176, Fed. Cas. No. 16,791..... 414
Upton v. Englehart, 3 Dill. 496, Fed. Cas. No. 16,800 289

Valton v. Insurance Co., 20 N. Y. 32, 38 583
Vance v. Vance, 108 U. S. 245, 514, 521, 2 Sup. Ct. 854, 27 L. Ed. 808....575, 577, 578
Van De Haar v. Van Demseler, 56 Iowa, 671, 676, 10 N. W. 227 509
Van Horne v. Fonda, 5 Johns. Ch. 388, 407 628
Victor Talking Machine Co. v. The Fair, 61 C. C. A. 58, 123 Fed. 424, 426....545, 546
Victory, The, and The Plymethian, 168 U. S. 411, 426, 18 Sup. Ct. 149, 42 L. Ed. 519 423
Vindomera, The (1891) A. C. 1..... 422
Vivar v. Knights of Pythias, 52 N. J. Law, 455, 469, 20 Atl. 36, 41..... 583

Wager v. Hall, 16 Wall. 584, 21 L. Ed. 504 677
Wakeman v. Mfg. Co., 101 N. Y. 205, 4 N. E. 264, 54 Am. Rep. 676.....32, 35
Walker v. Walker, 9 Wall. 746, 754, 19 L. Ed. 814 399
Walker v. Whitehead, 16 Wall. 314, 21 L. Ed. 357 212
Wallace v. Holmes, 29 Fed. Cas. 79.... 548
Wallace v. McConnell, 13 Pet. 136, 10 L. Ed. 95 163
Wallingsford v. Allen, 10 Pet. 583, 592, 9 L. Ed. 542 .....387, 388
Ward v. Joslin, 186 U. S. 142, 22 Sup. Ct. 807, 46 L. Ed. 1093..... 77
Ware v. Wisner (C. C.) 50 Fed. 310 5
Warnock v. Davis, 104 U. S. 775, 778, 782, 26 L. Ed. 924..... 582
Warren v. Boston (Mass.) 62 N. E. 951.. 647
Warren v. Stoddart, 105 U. S. 224, 26 L. Ed. 1117 31
Washington Gaslight Co. v. Lansden, 172 U. S. 534, 19 Sup. Ct. 296, 43 L. Ed. 543 610

Digitized by Google

Page

Washington Nat. Bank v. Eckels (C. C.) 57 Fed. 870 213
Washington & G. R. Co. v. McDade, 135 U. S. 554, 570, 10 Sup. Ct. 1044, 34 L. Ed. 235 102
Water Meter Co. v. Desper, 101 U. S. 332, 25 L. Ed. 1024 117
Watkins v. King, 55 C. C. A. 290, 118 Fed. 531 261
Watts v. Weston, 10 C. C. A. 302, 62 Fed. 136 154
Weatherhead's Lessee v. Baskerville, 11 How. 360, 13 L. Ed. 730..... 304
Webb, The, 14 Wall. 406, 414, 20 L. Ed. 774 555
Webb v. Fisher, 109 Tenn. 702, 72 S. W. 110, 60 L. R. A. 791, 97 Am. St. Rep. 863 543
Webber v. Mihills, 59 C. C. A. 578, 124 Fed. 64 622
Webster v. Cooper, 14 How. 488, 501, 14 L. Ed. 510 572
Wells, Ex parte, 2 M. & D. & De G. 504.. 386
West v. Chamberlain, 58 S. W. 584, 22 Ky. Law Rep. 687.....519, 531
Westchester R. Co. v. Jackson, 77 Pa. 321 57
Western Coal Min. Co. v. Ingraham, 17 C. C. A. 71, 70 Fed. 219 368
Western Ins. Co. v. Cropper, 32 Pa. 351, 355, 75 Am. Dec. 56 126
Western Union Tel. Co. v. Eyser, 91 U. S. 495, 23 L. Ed. 377 609
Western Union Tel. Co. v. Railroad Co., 178 U. S. 239, 20 Sup. Ct. 867, 44 L. Ed. 1052 450
Western Union Tel. Co. v. Tracy, 52 C. C. A. 168, 114 Fed. 282 601
Western W. S. Co. v. Drinnen (C. C.) 79 Fed. 820 416
Western & A. R. Co. v. Roberson, 9 C. C. A. 646, 61 Fed. 592, 604.....567, 569
Whalen v. Gordon, 37 C. C. A. 70, 74, 95 Fed. 305, 309 509
Whallon v. Sprague Co., 1 App. Div. 264, 37 N. Y. Supp. 174 486
Wheeler v. Jackson, 137 U. S. 245, 255, 11 Sup. Ct. 76, 34 L. Ed. 659.....575, 577
Whelton v. Railroad Co., 172 Mass. 555, 52 N. E. 1072 601
Whitman v. Bank, 49 C. C. A. 122, 110 Fed. 504 188

Page

Wicker v. Hoppock, 6 Wall. 94, 18 L. Ed. 752 31
Widaman v. Hubbard (C. C.) 88 Fed. 806, 814 583
Wiggins v. Armstrong, 2 Johns. Ch. 144 262
Wilcox, In re (D. C.) 94 Fed. 84..... 502
Wilcox v. Jackson, 13 Pet. 498, 10 L. Ed. 264 280
Willard v. Eastham, 15 Gray, 328, 335, 79 Am. Dec. 366 389
Williams v. U. S., 1 How. 299, 11 L. Ed. 135; 168 U. S. 382, 18 Sup. Ct. 92, 42 L. Ed. 509 .....305, 464
Wilmot, The Collector, 6 Wheat. 194, 203, 5 L. Ed. 239..... 415
Wilson v. Iseminger, 185 U. S. 55, 62, 22 Sup. Ct. 573, 46 L. Ed. 804..... 575
Wilson v. Oswego Tp., 151 U. S. 56, 66, 14 Sup. Ct. 259, 38 L. Ed. 70..... 363
Wilson's Ex'rs v. Tappan, 6 Ohio, 174.. 90
Wisconsin Compressed Air House Cleaning Co. v. Compressed Air Cleaning Co., 60 C. C. A. 529, 125 Fed. 761..... 640
Withers v. Com., 5 Serg. & R. 59..... 461
Wong Wing v. U. S., 163 U. S. 228, 16 Sup. Ct. 977, 41 L. Ed. 140..... 3
Wood v. Weimar, 104 U. S. 786, 792, 26 L. Ed. 779 670
Woods v. Root, 59 C. C. A. 206, 123 Fed. 402 71
Woodward v. Spurr, 141 Mass. 283, 286, 287, 6 N. E. 521.....385, 387, 394, 396
Woodward v. Woodward, 3 De G. J. & S. 671, 674 387
Wooster v. Tarr, 8 Allen, 270, 85 Am. Dec. 707 349
Worley v. Tobacco Co., 104 U. S. 340, 342, 26 L. Ed. 821 552
Wright, In re (D. C.) 96 Fed. 820..... 416
Wright v. Yuengling, 155 U. S. 47, 15 Sup. Ct. 1, 39 L. Ed. 64..... 117
Wrightman v. Boone County (C. C.) 82 Fed. 412 573
W. W. Montague & Co. v. Lowry, 24 Sup. Ct. 307, 48 L. Ed. 608..... 492

Young v. Hill, 6 Hun, 613..... 516

Zimmerman v. So Relle, 25 C. C. A. 518, 80 Fed. 417 164

Digitized by Google

CASES PASSED UPON.

CASES IN THE UNITED STATES CIRCUIT COURTS OF APPEALS WHICH HAVE BEEN PASSED UPON BY THE SUPREME COURT OF THE UNITED STATES.

Flanigan v. Sierra County.....58 C. C. A. 340

Writ of certiorari. Judgment reversed February 20, 1905. 25 Sup. Ct. 314, 196 U. S. 553, 49 L. Ed. —.

Germanic, The .....59 C. C. A. 521

Writ of certiorari. Decree affirmed February 20, 1905. 25 Sup. Ct. 317, 196 U. S. 589, 49 L. Ed. —.

McClaine v. Rankin.....56 C. C. A. 160

Writ of error. Judgment reversed March 6, 1905. 25 Sup. Ct. 410, 197 U. S. 154, 49 L. Ed. —.

Uinta Tunnel Min. & Transp. Co. v. Creede & C. C. Min. & Mill. Co. .....57 C. C. A. 200

Writ of certiorari. Judgment affirmed January 30, 1905. 25 Sup. Ct. 266, 196 U. S. 337, 49 L. Ed. —.

United States v. Stinson.....60 C. C. A. 615

Appeal. Decree affirmed March 13, 1905. 25 Sup. Ct. 426, 197 U. S. 200, 49 L. Ed. —.

Western Tie & Timber Co. v. Brown.....64 C. C. A. 256

Appeal. Decree reversed February 20, 1905. 25 Sup. Ct. 339, 196 U. S. 502, 49 L. Ed. —

Wheeler v. Plumas County.....58 C. C. A. 683

Writ of certiorari. Judgment reversed February 20, 1905. 25 Sup. Ct. 316, 196 U. S. 562, 49 L. Ed. —.

Digitized by Google

CASES ON REHEARING.

CASES IN THE UNITED STATES CIRCUIT COURTS OF APPEALS IN WHICH REHEARINGS HAVE BEEN GRANTED OR DENIED.

Conner v. Manchester Assur. Co. ..... 65 C. C. A. 127
Rehearing denied, March 3, 1905.
First Nat. Bank v. Simpson ..... 63 C. C. A. 371
Rehearing denied, June 15, 1904.
Lockman v. Lang ..... 65 C. C. A. 621
Rehearing granted, 65 C. C. A. 621.
Simpson v. First Nat. Bank ..... 63 C. C. A. 371
Rehearing denied, June 15, 1904.

Digitized by Google

INDEX TO NOTES.

VOLUMES 1-65.

ABANDONMENT.
Of trade-marks and trade-names. 33 C. C. A. 294.
Of railroad right of way. 42 C. C. A. 576.
Of water rights. 45 C. C. A. 190.

ABATEMENT AND REVIVAL.
Pendency of action in state or federal court as ground for abatement of action in the other. 47 C. C. A. 205.

ACCIDENT INSURANCE.
Risks and causes of loss. 38 C. C. A. 3.

ACTIONS.
Jurisdiction of federal courts as restricted by state laws. 1 C. C. A. 514.
On insurance policy—Time of bringing suit. 2 C. C. A. 473; 35 C. C. A. 404.
Forms of action in federal courts—Following state practice. 5 C. C. A. 598.
Limitation of actions against corporate officers. 53 C. C. A. 7.
By and against receivers and "agents" of national banks. 53 C. C. A. 398.
Bar of action as determined by limitations of state other than that in which action is brought. 58 C. C. A. 186.

ADMIRALTY.
Nature of hearing on appeal—Admission of new proof. 3 C. C. A. 322.
Demurrage. 14 C. C. A. 657; 21 C. C. A. 337; 46 C. C. A. 4.
Extinguishment of maritime liens. 17 C. C. A. 102.
Jurisdiction as to matters of contract. 18 C. C. A. 347; 27 C. C. A. 530.
General average. 20 C. C. A. 357.
Jurisdiction to enforce liens under state laws. 21 C. C. A. 21.
Collision rules. 28 C. C. A. 532; 29 C. C. A. 368.
Salvage awards. 30 C. C. A. 280.
Signals of meeting vessels. 30 C. C. A. 630.
Negligence of both master and servant—Division of damages. 30 C. C. A. 678.
Jurisdiction of suits between foreigners. 37 C. C. A. 193.
Limitation of shipowner's liability. 45 C. C. A. 387.

ADMIRALTY—Cont'd.
Statutory exemptions of shipowners from liability. 49 C. C. A. 11.
Demise of vessel. 55 C. C. A. 225.
Collision—Overtaking vessels. 60 C. C. A. 254.
Jurisdiction of torts. 62 C. C. A. 279.

ADVERSE POSSESSION.
Tax deed as color of title. 24 C. C. A. 402.
Acquisition or loss of right to railroad right of way by prescription. 63 C. C. A. 7.

ALIENS.
Citizenship under state and federal laws. 6 C. C. A. 37.
Citizenship of the Chinese. 1 C. C. A. 212; 35 C. C. A. 332.
Citizenship of married women. 65 C. C. A. 5.

APPEAL.
In admiralty—New proofs. 3 C. C. A. 322.
Review of previous decisions as to validity of patents in circuit court of appeals. 3 C. C. A. 565; 27 C. C. A. 427; 32 C. C. A. 484.
Review of interlocutory decree granting or refusing injunction in patent case in circuit court of appeals. 3 C. C. A. 572; 27 C. C. A. 189; 32 C. C. A. 484.
When may be aided by mandamus. 10 C. C. A. 450.
Following state practice. 27 C. C. A. 394.
Finality of judgments and decrees for purposes of review. 2 C. C. A. 379; 17 C. C. A. 238; 28 C. C. A. 482.
Appeal and review in bankruptcy cases. 43 C. C. A. 9.
Appeal or mandamus. 47 C. C. A. 376.
Reduction or increase of amount of recovery on appeal. 48 C. C. A. 470.

APPEARANCE.
Following state practice. 5 C. C. A. 594.

ARBITRATION AND AWARD.
Arbitration as a condition of an insurance policy. 9 C. C. A. 628; 39 C. C. A. 389.

Digitized by Google

ARBITRATION AND AWARD — Cont'd.
Setting aside an award for interest, prejudice, or misconduct of arbitrator. 12 C. C. A. 592.

ARGUMENTS.
Of counsel upon failure to produce witness. 13 C. C. A. 589.

ASSAULT AND BATTERY.
Mental suffering as element of damages. 11 C. C. A. 561.

ASSIGNEES.
Citizenship as affecting the jurisdiction of the federal courts. 10 C. C. A. 254; 27 C. C. A. 302.

ASSIGNMENT.
Of right to use name as trade-mark. 17 C. C. A. 579; 27 C. C. A. 360.
Of claims against the United States and government contracts. 22 C. C. A. 650.
Liability of transferrors and transferees of corporate stock for assessments. 61 C. C. A. 322.
Of licenses for use or sale of patents. 64 C. C. A. 596.
Subrogation of insurer under assignment of rights of insured. 65 C. C. A. 615.

ASSIGNMENT FOR BENEFIT OF CREDITORS.
Power of corporation to make. 24 C. C. A. 221.
Effect of national bankruptcy act on state insolvency laws and on assignments for benefit of creditors. 51 C. C. A. 11.

ASSUMPTION OF RISK.
Assumption of risk incident to employment. 38 C. C. A. 314.

ATTACHMENT.
Issuance—Following state practice. 5 C. C. A. 606; 27 C. C. A. 393.

ATTORNEY AND CLIENT.
Arguments of counsel. 13 C. C. A. 589.
Bonds, securities, and other papers subject to lien for services. 32 C. C. A. 229.
Liability of attorneys for contempt. 48 C. C. A. 7.
Comments of counsel and instructions on failure of accused to testify. 54 C. C. A. 373.

AWARD.
Setting aside for interest, prejudice, or misconduct of arbitrator. 12 C. C. A. 592.

BAGGAGE.
Responsibility of sleeping-car companies for baggage and valuables. 10 C. C. A. 338.

BAGGAGE—Cont'd.
Limitation of liability by carrier for passenger's baggage. 32 C. C. A. 308.

BANKRUPTCY.
Jurisdiction of federal courts in suits relating to bankruptcy. 11 C. C. A. 313.
What persons are subject to bankruptcy law. 42 C. C. A. 4.
Appeal and review in bankruptcy cases. 43 C. C. A. 9.
Franchises and licenses as assets in bankruptcy. 43 C. C. A. 389.
Effect of national bankruptcy act on state insolvency laws and on assignments for benefit of creditors. 51 C. C. A. 11.

BANKS AND BANKING.
Jurisdiction of federal courts in suits against national banks. 11 C. C. A. 315.
Who liable as shareholders in national banks. 15 C. C. A. 130; 46 C. C. A. 503.
Personal liability of directors. 12 C. C. A. 680; 33 C. C. A. 230.
Deposits in bank after insolvency. 43 C. C. A. 588.
Enforcement of statutory liability of stockholders in national banks. 52 C. C. A. 6.
Actions by and against receivers and "agents" of national banks. 53 C. C. A. 398.
Lien of banks on stock. 56 C. C. A. 179.
Taxation of bank deposits. 60 C. C. A. 413.

BILLS OF LADING.
Perils of the sea. 19 C. C. A. 465.

BOARDS OF TRADE.
Quotations of prices and transactions on exchanges. 61 C. C. A. 2.

BONDS.
Bona fide purchasers of municipal bonds. 41 C. C. A. 6.
Death of surety. 49 C. C. A. 591.

BREACH OF MARRIAGE PROMISE.
Effect of existing marriage on subsequent contract to marry. 50 C. C. A. 583.

BUILDING AND LOAN ASSOCIATIONS.
Statutory exemptions from operation of usury laws. 36 C. C. A. 343.
What law governs usury. 51 C. C. A. 319.

CANCELLATION.
Of patent to public land. 22 C. C. A. 38.
Of certificates of corporate stock. 55 C. C. A. 167.
Cancellation, surrender, or rescission of charter of vessel. 61 C. C. A. 569.

Digitized by Google

CARRIERS.
Duty to protect passengers from dangerous fellow passengers. 4 C. C. A. 231.
Right to restrain or expel disorderly passenger. 4 C. C. A. 231.
Duties and liabilities of sleeping-car companies. 10 C. C. A. 335; 34 C. C. A. 386.
Liability for injuries caused by negligence or torts of servants. 10 C. C. A. 466; 27 C. C. A. 651.
Duty to stop trains at station. 14 C. C. A. 362.
Quick dispatch—Demurrage. 14 C. C. A. 657; 21 C. C. A. 342.
Contracts other than for carriage. 20 C. C. A. 521.
Who are common carriers of goods. 20 C. C. A. 521.
Liability as warehousemen. 20 C. C. A. 529.
Duty to trespasser on train. 31 C. C. A. 76.
Who are passengers. 31 C. C. A. 164.
Persons assisting passengers. 31 C. C. A. 164.
Rights of licensee on train. 31 C. C. A. 164.
Rights of person traveling on pass. 31 C. C. A. 164; 32 C. C. A. 306.
Burden of proof of negligence where passengers have been injured. 32 C. C. A. 23.
Live stock—Evidence admissible in actions for injuries through negligence or accident. 32 C. C. A. 148.
Limitations of liability for personal injuries to passengers and for baggage. 32 C. C. A. 301.
Continuance of passenger relation. 40 C. C. A. 437.
Liability of railroads or street car companies for ejection of trespassers. 51 C. C. A. 578.
Injuries to railroad passengers while occupying positions other than regular seats. 54 C. C. A. 4.
Use of carriers' premises by hack and cab drivers, hotel runners, etc. 57 C. C. A. 367.
Regulations of charges by carrier for long and short hauls. 60 C. C. A. 542.
Duties and liabilities of carriers as to furnishing facilities for transportation. 61 C. C. A. 414.
Negligence in ejection of persons under disability. 62 C. C. A. 422.
Liabilities of connecting carriers for injuries to passengers. 64 C. C. A. 485.

CERTIFICATES.
Of receivers. 26 C. C. A. 350.
Of corporate stock—Cancellation. 55 C. C. A. 167.

CERTIORARI.
From supreme court. 1 C. C. A. 5.

CHARITIES.
Liabilities of charitable institutions for negligence. 47 C. C. A. 134.

CHARTER.
Implied warranty of seaworthiness. 15 C. C. A. 388; 60 C. C. A. 179.
Cancellation, surrender, or rescission of charter of vessel. 61 C. C. A. 569.

CHATTEL MORTGAGES.
Controlling effect of state decisions in United States courts. 11 C. C. A. 88.

CHILD.
Death of parent by wrongful act—Damages. 1 C. C. A. 34.
Imputed negligence. 34 C. C. A. 4.
Age as affecting contributory negligence. 37 C. C. A. 362.

CHINESE.
Citizenship. 1 C. C. A. 212; 35 C. C. A. 332.

CIRCUIT COURTS.
Review of jurisdiction of circuit courts. 48 C. C. A. 351.

CIRCUIT COURTS OF APPEALS.
Certiorari from supreme court. 1 C. C. A. 5.
Jurisdiction. 1 C. C. A. 6; 32 C. C. A. 475.
Effect of previous decisions as to validity of patents. 3 C. C. A. 565; 27 C. C. A. 427; 32 C. C. A. 484.
Review of interlocutory decrees in patent cases. 3 C. C. A. 572; 27 C. C. A. 189; 32 C. C. A. 484.
Orders, decrees, and judgments reviewable. 13 C. C. A. 374.
Enjoining proceedings in state courts. 16 C. C. A. 90; 27 C. C. A. 575; 63 C. C. A. 437.
Conflicts of jurisdiction between federal and state courts. 22 C. C. A. 356; 26 C. C. A. 49.
Jurisdiction on habeas corpus. 25 C. C. A. 11.
Review of jurisdiction of circuit courts. 48 C. C. A. 351.

CITIZENSHIP.
Of Chinese. 1 C. C. A. 212; 35 C. C. A. 332.
Of aliens under state and federal laws. 6 C. C. A. 37.
Of corporations. 6 C. C. A. 174; 10 C. C. A. 249; 27 C. C. A. 301.
Diverse citizenship as a ground of federal jurisdiction. 10 C. C. A. 249; 27 C. C. A. 298.
Of married women. 65 C. C. A. 5.

COLLISION.
As a peril of the sea. 19 C. C. A. 468.
Collision rules—Speed of steamers in fog. 28 C. C. A. 532.
Collision rules—Speed of sailing vessels in fog. 29 C. C. A. 368.
Signals of meeting vessels. 30 C. C. A. 630.
Overtaking vessels. 60 C. C. A. 254.

COLOR OF TITLE.
Tax deed as color of title. 24 C. C. A. 402.

Digitized by Google

COMMERCE.
Taxation of interstate commerce by state. 8 C. C. A. 492.
Jurisdiction of federal courts of suits under interstate commerce act. 11 C. C. A. 318.
State laws interfering with interstate or foreign commerce—Exclusion, regulation, and taxation of foreign corporations. 24 C. C. A. 13.
Inspection, quarantine, and sanitary regulations interfering with interstate commerce. 59 C. C. A. 191.

CONSTITUTIONAL LAW.
Due process of law in revenue proceedings. 8 C. C. A. 398.
Regulation of commerce by taxation. 8 C. C. A. 492.
Restrictions on grants. 14 C. C. A. 6.
Limitations of taxing power. 28 C. C. A. 515.
Interference with interstate or foreign commerce. 24 C. C. A. 13.
Constitutional limitations of municipal indebtedness. 36 C. C. A. 6.
Trial by jury in criminal prosecutions. 39 C. C. A. 275.

CONTEMPT.
Liability of attorneys. 48 C. C. A. 7.

CONTRACTS.
Implied obligation to pay for benefits received. 2 C. C. A. 488.
Jurisdiction of federal courts as to laws impairing obligation of contract. 11 C. C. A. 316.
Relating to use of trade-name. 14 C. C. A. 104.
Mutuality in. 15 C. C. A. 543.
Intent as an element in offer and acceptance. 16 C. C. A. 199.
Admiralty jurisdiction over. 18 C. C. A. 347; 27 C. C. A. 530.
Of common carriers other than for carriage. 20 C. C. A. 521.
Restraining competition in bidding for public works at judicial sales, etc. 28 C. C. A. 192.
For lobby services. 29 C. C. A. 446.
Breach of executory contract—Accrual of right to sue. 30 C. C. A. 210.
Divisibility of contracts. 30 C. C. A. 467.
Of persons non compos mentis under guardianship. 34 C. C. A. 264.
Monopolistic contracts—Validity as affected by public policy. 9 C. C. A. 666; 34 C. C. A. 486.
Marketable title. 40 C. C. A. 592.
Sufficiency of expression of consideration in memorandum within statute of frauds. 46 C. C. A. 183.
Persons entitled to enforce specific performance. 47 C. C. A. 493.
Enforcement of contracts requiring performance of continuous acts. 49 C. C. A. 103.
Discharge of surety on building contract by change in obligation or duty of principal. 52 C. C. A. 427.

CONTRACTS—Cont'd.
Marriage by mutual agreement. 52 C. C. A. 581.
Restraining breach of contract of employé not to engage in competing business. 53 C. C. A. 492.
Validity of contracts with public officers as affected by legality of object or consideration. 56 C. C. A. 10.
For sale of things to be produced or manufactured. 58 C. C. A. 363.
Merger of contracts. 60 C. C. A. 6.
Relating to liability of master for negligence causing injury to or death of servant. 62 C. C. A. 5.
Enforcement of contracts of which time is the essence. 63 C. C. A. 562.

CONTRIBUTION.
On marine loss—General average. 20 C. C. A. 357.

COPYRIGHTS.
Laches as a defense in suits for infringement. 22 C. C. A. 211; 36 C. C. A. 613.
Matter subject to copyright. 58 C. C. A. 273.

CORPORATIONS.
Citizenship for purposes of federal jurisdiction. 6 C. C. A. 174; 10 C. C. A. 249; 27 C. C. A. 298.
Status of foreign corporations. 7 C. C. A. 419.
Dissolution of foreign corporation. 7 C. C. A. 421.
Jurisdiction of federal courts in suits against federal corporations. 11 C. C. A. 314.
Personal liability of directors for negligence. 12 C. C. A. 680; 33 C. C. A. 230.
The power of officers and directors in their individual capacity to deal with corporation. 13 C. C. A. 466.
Use of corporate name as trade-name. 17 C. C. A. 579; 27 C. C. A. 357.
Stockholders' liability to creditors in equity. 23 C. C. A. 315; 33 C. C. A. 23.
Exclusion, regulation, and taxation of foreign corporations. 24 C. C. A. 13.
Power to assign for benefit of creditors. 24 C. C. A. 221.
Foreign corporations "doing business" in state. 33 C. C. A. 585.
Liability for torts. 39 C. C. A. 9.
Rights and liabilities of pledgees of stock. 42 C. C. A. 135.
Service of process on foreign corporations. 45 C. C. A. 3.
Acts of corporators and promoters. 46 C. C. A. 576.
Power to form partnership. 50 C. C. A. 131.
Effect of judgment against corporation in action to enforce stockholder's liability. 52 C. C. A. 305.
Limitation of actions against corporate officers. 53 C. C. A. 7.

Digitized by Google

CORPORATIONS—Cont'd.
Cancellation of certificates of corporate stock. 55 C. C. A. 167.
Liability of transferrors and transferees of corporate stock for assessments. 61 C. C. A. 322.
Liabilities enforceable against reorganized corporations. 62 C. C. A. 147.

COSTS.
Right to costs in equity. 17 C. C. A. 368.

COUNTERFEITING.
Nonmailable matter. 30 C. C. A. 86.

COURTS.
Dicta. 64 C. C. A. 361.

CREDIT.
Loss of as element of damages. 62 C. C. A. 612.

CREDIT INSURANCE. 19 C. C. A. 271; 34 C. C. A. 165.

CRIMINAL LAW.
Practice on trial before jury. 26 C. C. A. 528.
Trial by jury in criminal prosecutions. 39 C. C. A. 275.
Prosecution and punishment of accessories. 44 C. C. A. 326.
Power of court to revise sentence. 46 C. C. A. 412.
Restraining criminal proceedings. 51 C. C. A. 133.
Proof of corpus delicti to corroborate a confession. 53 C. C. A. 278.
Comments of counsel and instructions on failure of accused to testify. 54 C. C. A. 373.
Preliminaries to introduction of secondary evidence in criminal prosecutions. 61 C. C. A. 117.

CUSTOMS AND USAGES.
Presumptions. 56 C. C. A. 394.

CUSTOMS DUTIES.
Interpretation of commercial and trade terms in tariff laws. 18 C. C. A. 545.

DAMAGES.
Mental suffering as an element of damage in general. 11 C. C. A. 556.
For mental suffering for delay in delivery of telegram. 11 C. C. A. 571; 15 C. C. A. 250; 28 C. C. A. 62.
Delay in transmission of telegraphic message. 14 C. C. A. 177.
Measure of, in actions against telegraph companies. 15 C. C. A. 235; 28 C. C. A. 59.
In condemnation proceedings. 16 C. C. A. 468.
For personal injuries as affected by plaintiff's character and condition. 27 C. C. A. 138.
Negligence of both master and servant —Division of damages in admiralty. 30 C. C. A. 678.

DAMAGES—Cont'd.
Punitive damages for death by wrongful act. 44 C. C. A. 259.
Reduction or increase of amount of recovery on appeal. 48 C. C. A. 470.
Persons entitled to damages for wrongful enforcement of tax. 54 C. C. A. 550.
Aggravation of disease or injury due to existing disease, predisposition, or physical condition. 54 C. C. A. 645.
Loss of credit as element of damages. 62 C. C. A. 612.
Mitigation of damages for wrongful discharge from employment by failure of servant to seek or accept other employment. 64 C. C. A. 5.

DEATH BY WRONGFUL ACT.
Mental suffering as element of damages. 11 C. C. A. 563.
Punitive damages. 44 C. C. A. 259.
What law governs actions. 47 C. C. A. 606.

DECREES.
Power of court to amend or modify interlocutory orders and decrees. 61 C. C. A. 236.

DEEDS.
Names of parties. 23 C. C. A. 146.

DEMURRAGE.
Quick dispatch. 14 C. C. A. 657; 21 C. C. A. 342.
Definition and general principles. 21 C. C. A. 337; 46 C. C. A. 4.

DEPOSITION.
Conformity to state practice. 5 C. C. A. 602; 27 C. C. A. 392.
Use of deposition when deponent is present. 50 C. C. A. 232.

DICTA.
Of courts. 64 C. C. A. 361.

DIRECTORS.
Personal liability for negligence. 12 C. C. A. 680; 33 C. C. A. 230.

DISCOVERY.
Conformity to state practice. 5 C. C. A. 594; 27 C. C. A. 393.

DISSOLUTION.
Of foreign corporations. 7 C. C. A. 421.
Of municipal corporations—Effect on indebtedness. 33 C. C. A. 506.

DIVORCE.
Separation agreements. 38 C. C. A. 608.

DOMICILE.
Effect of change of domicile on the question of diverse citizenship. 10 C. C. A. 251.

Digitized by Google

DOWER.
How inchoate right extinguished. 3 C. C. A. 316.
In mines. 3 C. C. A. 316.
What estate subject to dower. 3 C. C. A. 316.
Divestiture of inchoate right by legislative action. 4 C. C. A. 295.

EMINENT DOMAIN.
Consequential and indirect damages. 16 C. C. A. 468.
Nature of estate or interest acquired in condemnation proceedings. 53 C. C. A. 604.

EQUITY.
Right to costs. 17 C. C. A. 368.
Equitable mortgages. 18 C. C. A. 458.
Stockholders' liability to creditors of corporation. 23 C. C. A. 315; 33 C. C. A. 23.
Compensation of masters in chancery. 27 C. C. A. 475.
Conclusiveness and effect of judgments as between courts of law and equity. 50 C. C. A. 463.
Obtaining possession or establishing title to personal property in equity. 58 C. C. A. 101.

ESTOPPEL.
As against state or United States. 16 C. C. A. 353.

EVIDENCE.
Rules of evidence in federal courts—Following state practice. 5 C. C. A. 594.
Examination of party before trial—Conformity to state practice. 5 C. C. A. 602.
Excluded from bill of exceptions. 14 C. C. A. 248.
Burden of proof of negligence where passenger has been injured. 32 C. C. A. 23.
Evidence admissible to show injury to live stock, during transportation, through negligence or accident. 32 C. C. A. 148.
Judicial notice of public laws and regulations. 44 C. C. A. 4.
Use of deposition when deponent is present. 50 C. C. A. 232.
Negative testimony. 52 C. C. A. 82.
As to character or reputation in civil actions. 55 C. C. A. 7.
Presumptions as to customs and usages. 56 C. C. A. 394.
Utility, extent of use, and commercial success as evidence of invention. 59 C. C. A. 620.
Preliminaries to introduction of secondary evidence in criminal prosecutions. 61 C. C. A. 117.

EXCEPTIONS, BILL OF.
Time of filing—When regulated by state practice. 5 C. C. A. 594.
Exclusion of evidence from. 14 C. C. A. 248.

EXCHANGES.
Membership in stock exchange as an asset in bankruptcy. 43 C. C. A. 389.
Quotations of prices and transactions on exchanges. 61 C. C. A. 2.

EXECUTIVE DEPARTMENTS.
Regulations of. 26 C. C. A. 239.

EXECUTORS AND ADMINISTRATORS.
Citizenship as affecting the jurisdiction of the federal courts. 10 C. C. A. 252.
Probate jurisdiction of federal courts. 36 C. C. A. 276.

EXTINGUISHMENT.
Of maritime liens. 17 C. C. A. 102.

EXTRADITION.
Scope of review on habeas corpus to procure release of person sought to be extradited. 62 C. C. A. 506.
Fugitives from justice under extradition laws. 63 C. C. A. 104.

FEDERAL COURTS.
Jurisdiction of circuit courts of appeals in general. 1 C. C. A. 6; 32 C. C. A. 475.
Jurisdiction as affected by state laws. 1 C. C. A. 513.
Jurisdiction of circuit court of appeals to review interlocutory decrees in patent cases. 3 C. C. A. 572; 27 C. C. A. 189; 32 C. C. A. 484.
Conformity of practice in common-law actions to that of state court. 5 C. C. A. 594; 27 C. C. A. 392.
Jurisdiction over corporations. 6 C. C. A. 174.
State laws as rules of decision in federal courts. 11 C. C. A. 71; 29 C. C. A. 553.
Diverse citizenship as a ground of federal jurisdiction. 10 C. C. A. 249; 27 C. C. A. 298.
Jurisdiction in cases involving federal question. 11 C. C. A. 308; 35 C. C. A. 7.
Jurisdiction and judgments of Indian courts. 11 C. C. A. 468.
Federal jurisdiction of suits against state. 13 C. C. A. 165.
Orders, decrees, and judgments reviewable in circuit court of appeals. 13 C. C. A. 374.
Jurisdiction as affected by possession of the subject-matter. 15 C. C. A. 6.
Enjoining proceedings in state courts. 16 C. C. A. 90; 27 C. C. A. 575; 63 C. C. A. 437.
Lack of jurisdiction of United States circuit court. 16 C. C. A. 507.
Removal of causes—Separable controversy. 18 C. C. A. 86; 35 C. C. A. 155.
Jurisdiction in admiralty as to matters of contract. 18 C. C. A. 347; 27 C. C. A. 530.

Digitized by Google

FEDERAL COURTS—Cont'd.
Jurisdiction of circuit courts as determined by the amount in controversy. 19 C. C. A. 75; 36 C. C. A. 459.
Jurisdiction in admiralty to enforce liens created by state laws. 21 C. C. A. 21.
Conclusiveness of judgment between federal and state courts. 21 C. C. A. 478; 49 C. C. A. 468.
Conflict of jurisdiction with state courts. 22 C. C. A. 356.
Jurisdiction in mortgage foreclosure. 24 C. C. A. 523.
Jurisdiction on habeas corpus. 25 C. C. A. 4.
Mandamus to enforce payment of judgment against municipality. 25 C. C. A. 475.
Suits by and against receivers of. 26 C. C. A. 49.
Jury trial—Province of court and jury. 26 C. C. A. 528.
Supplementary and ancillary proceedings and relief. 36 C. C. A. 195.
Probate jurisdiction. 36 C. C. A. 276.
Admiralty jurisdiction of suits between foreigners. 37 C. C. A. 193.
Enjoining proceedings in federal courts. 45 C. C. A. 591.
Pendency of action in state or federal court as ground for abatement of action in the other. 47 C. C. A. 205.
Review of jurisdiction of circuit courts. 48 C. C. A. 351.
Waiver of right as to district in which suit may be brought. 52 C. C. A. 192.

FEDERAL QUESTIONS.
As conferring jurisdiction on United States courts. 11 C. C. A. 308; 35 C. C. A. 7.

FELLOW SERVANTS.
Who are. 8 C. C. A. 668; 31 C. C. A. 286.
Concurrent negligence of master and fellow servant. 40 C. C. A. 236.

FERRIES.
As carriers. 20 C. C. A. 536.

FIDELITY INSURANCE. 19 C. C. A. 273.

FIRES.
As a peril of the sea. 19 C. C. A. 472.
Presumption of negligence from railroad fires. 41 C. C. A. 370.
Fire escapes on buildings. 64 C. C. A. 217.

FORECLOSURE.
In federal courts. 24 C. C. A. 523.
Distribution of proceeds. 29 C. C. A. 639.

FOREIGN CORPORATIONS.
Status under the rule of comity. 7 C. C. A. 419.
Dissolution. 7 C. C. A. 421.

FOREIGN CORPORATIONS—Cont'd.
Exclusion—Regulation and taxation. 24 C. C. A. 13.
What constitutes "doing business" in state. 33 C. C. A. 585.
Service of process. 45 C. C. A. 3.

FRANCHISES.
As assets in bankruptcy. 43 C. C. A. 389.

FRAUD.
In use of trade-marks and trade-names. 17 C. C. A. 579, 657; 20 C. C. A. 165; 30 C. C. A. 380.
Nonmailable matter. 30 C. C. A. 86.

FRAUDS, STATUTE OF.
Sufficiency of expression of consideration in memorandum within statute. 46 C. C. A. 183.

GARNISHMENT.
Following state practice. 5 C. C. A. 606; 27 C. C. A. 393.
Of receivers. 26 C. C. A. 49.

GENERAL AVERAGE.
Marine insurance. 20 C. C. A. 357.

GIFTS.
Revocation of gifts causa mortis. 54 C. C. A. 143.

GUARANTY INSURANCE. 19 C. C. A. 271.

GUARDIAN AND WARD.
Citizenship as affecting the jurisdiction of the federal courts. 10 C. C. A. 253; 27 C. C. A. 300.

HABEAS CORPUS.
Jurisdiction of federal courts. 25 C. C. A. 4.
Scope of review on habeas corpus to procure release of persons sought to be extradited. 62 C. C. A. 506.

HEALTH.
Inspection, quarantine, and sanitary regulations interfering with interstate commerce. 59 C. C. A. 191.

HOMESTEAD.
Rights acquired by homestead settlements and entries on public lands. 59 C. C. A. 434.

HOSPITALS.
Liability for negligence. 47 C. C. A. 134.

HUSBAND AND WIFE.
Liability of husband for negligence and torts of wife. 12 C. C. A. 196.
Paraphernal property. 31 C. C. A. 40.
Separation agreements. 38 C. C. A. 608.
Citizenship of married women. 65 C. C. A. 5.

Digitized by Google

IMPLICATION.
Repeal of statutes by implication. 38 C. C. A. 136.

INDEBTEDNESS.
Constitutional and statutory limitations of municipal indebtedness. 36 C. C. A. 6.

INDEPENDENT CONTRACTORS.
Negligence of employés. 28 C. C. A. 392.

INDIANS.
Jurisdiction and judgments of Indian courts. 11 C. C. A. 468.
Citizenship of. 27 C. C. A. 298.

INFANTS.
Imputed negligence. 34 C. C. A. 4.
Age as affecting contributory negligence. 37 C. C. A. 362.

INFRINGEMENT.
Of patents, copyrights, and trademarks—Laches as a defense. 22 C. C. A. 211; 36 C. C. A. 613.
Contributory infringement of patents. 43 C. C. A. 485.

INJUNCTION.
Restraining proceedings in state courts. 16 C. C. A. 90; 27 C. C. A. 575; 63 C. C. A. 437.
Jurisdiction of circuit court of appeals to review interlocutory decrees. 32 C. C. A. 481.
Restraining pollution of water courses. 37 C. C. A. 544.
Right of taxpayer to enjoin misuse of public funds and property. 38 C. C. A. 458.
Restraining proceedings in federal courts. 45 C. C. A. 591.
Restraining criminal proceedings. 51 C. C. A. 133.
Restraining breach of contract of employé not to engage in competing business. 53 C. C. A. 492.
Persons entitled to restrain wrongful enforcement of tax. 54 C. C. A. 550.
Restraining enforcement of judgment pending establishment or enforcement of set-off or counterclaim. 58 C. C. A. 532.

INJURIOUS NOTICES.
Nonmailable matter. 30 C. C. A. 93.

INNKEEPERS.
Fire escapes on buildings. 64 C. C. A. 217.

INSANE PERSONS.
Contracts of persons non compos mentis under guardianship. 33 C. C. A. 264.
Effect of insanity on the question of suicide in insurance suits. 16 C. C. A. 623; 28 C. C. A. 284.

INSOLVENCY.
Effect of national bankruptcy act on state insolvency laws and on assignments for benefit of creditors. 51 C. C. A. 11.

INSPECTION.
Of public records. 49 C. C. A. 210.
Inspection, quarantine, and sanitary regulations interfering with interstate commerce. 59 C. C. A. 191.
Duty of servant to inspect appliances and places for work. 65 C. C. A. 370.

INSURANCE.
Accident insurance—Risks and causes of loss. 38 C. C. A. 3.
Conditions in policy as to time for bringing suit. 2 C. C. A. 473; 35 C. C. A. 404.
Conditions of policy—Arbitration. 9 C. C. A. 628; 39 C. C. A. 389.
Authority of insurance agent to waive prepayment of premiums. 13 C. C. A. 292.
Suicide as a defense to a life policy. 16 C. C. A. 623; 28 C. C. A. 284.
Credit insurance. 19 C. C. A. 271; 34 C. C. A. 165.
Guaranty insurance. 19 C. C. A. 271.
Fidelity insurance. 19 C. C. A. 273.
Title insurance. 19 C. C. A. 278.
Marine insurance—Perils of the sea. 19 C. C. A. 465.
Marine insurance—General average. 20 C. C. A. 357.
Waiver of condition against other insurance. 27 C. C. A. 46.
Divisibility of contracts. 30 C. C. A. 474.
Waiver by acceptance of premiums. 33 C. C. A. 369.
What constitutes an insurable interest in human life. 39 C. C. A. 632.
Change of beneficiary. 40 C. C. A. 4.
Commencement of risk. 41 C. C. A. 273.
What law governs policies. 46 C. C. A. 287.
Authority of insurance agents as to acceptance of risks. 49 C. C. A. 335.
Liability for injuries sustained by assured while engaged in occupation not covered by policy. 51 C. C. A. 434.
Time for notice of loss. 55 C. C. A. 376.
Notice of premiums, dues, and assessments. 59 C. C. A. 317.
Mutual benefit insurance contracts as affected by subsequent provisions and amendments of charter, constitution, or by-laws. 63 C. C. A. 285.
Subrogation of insurer under assignment of rights of insured. 65 C. C. A. 615.

INTENT.
As an element in offer and acceptance of proposition. 16 C. C. A. 199.

INTERSTATE COMMERCE.
Taxation of by state. 8 C. C. A. 492.
Jurisdiction of federal courts of suits under interstate commerce act. 11 C. C. A. 318.

Digitized by Google

INTERSTATE COMMERCE—Cont'd.
State laws interfering with interstate commerce. 24 C. C. A. 21.
Inspection, quarantine, and sanitary regulations interfering with interstate commerce. 59 C. C. A. 191.

JUDGMENT.
Method of entering judgment in federal court—Following state practice. 5 C. C. A. 604.
Of federal courts—Jurisdiction as involving federal question. 11 C. C. A. 317.
Giving full faith and credit—Jurisdiction of federal courts. 11 C. C. A. 318.
Rendition on Sunday. 12 C. C. A. 462.
Finality of judgments for purposes of review. 2 C. C. A. 379; 17 C. C. A. 238; 28 C. C. A. 482.
Conclusiveness as between federal and state courts. 21 C. C. A. 478; 49 C. C. A. 468.
Enforcement against municipality by mandamus. 25 C. C. A. 475.
Conclusiveness and effect of judgments as between courts of law and equity. 50 C. C. A. 468.
Effect of judgment against corporation in action to enforce stockholder's liability. 52 C. C. A. 305.
Restraining enforcement of judgment pending establishment or enforcement of set-off or counterclaim. 58 C. C. A. 532.
Power of court to amend or modify interlocutory orders and decrees. 61 C. C. A. 236.

JUDICIAL SALES.
On Sunday. 12 C. C. A. 462.
Contracts restraining competition in bidding. 28 C. C. A. 192.

JURISDICTION.
Of federal courts. See "Federal Courts."
Of circuit court of appeals. 1 C. C. A. 6; 32 C. C. A. 475.
Of supreme court. 1 C. C. A. 9, 11.
Diverse citizenship as ground of federal jurisdiction. 10 C. C. A. 249; 27 C. C. A. 298.
Federal question as ground of jurisdiction. 11 C. C. A. 308; 35 C. C. A. 7.
Of Indian courts. 11 C. C. A. 468.
As affected by possession of the subject-matter. 15 C. C. A. 6.
Removal of causes—Separable controversy. 18 C. C. A. 86; 35 C. C. A. 155.
Of circuit courts as determined by the amount in controversy. 19 C. C. A. 75; 36 C. C. A. 459.
Conflict between federal and state courts. 22 C. C. A. 356.
Probate jurisdiction. 36 C. C. A. 276.
Admiralty jurisdiction of suits between foreigners. 37 C. C. A. 193.
Review of jurisdiction of circuit courts. 48 C. C. A. 351.

JURY.
Right to trial by jury in federal court. 5 C. C. A. 603; 26 C. C. A. 528.
Following state practice. 5 C. C. A. 603; 27 C. C. A. 393.
Instructing jury and receiving verdict on Sunday. 12 C. C. A. 462.
Trial by jury in criminal prosecutions. 39 C. C. A. 275.

LACHES.
As a defense in suits for infringement of patents, copyrights, and trademarks. 22 C. C. A. 211; 36 C. C. A. 613.

LAND DEPARTMENT.
Conclusiveness and effect of decisions. 22 C. C. A. 38; 28 C. C. A. 344; 57 C. C. A. 207.

LIBEL AND SLANDER.
Mitigation. 40 C. C. A. 168.

LICENSE.
Implied rights of licensee of a patent. 25 C. C. A. 280.
Rights of licensee on train. 31 C. C. A. 164.
Licenses as assets in bankruptcy. 43 C. C. A. 389.
Sublicenses and assignments of licenses for use or sale of patents. 64 C. C. A. 596.

LIENS.
Maritime liens. 15 C. C. A. 679; 17 C. C. A. 102; 21 C. C. A. 21.
Attorneys' liens. 32 C. C. A. 229.
Maritime liens for torts. 34 C. C. A. 565.
Who are entitled to liens or preferences as laborers or employés. 47 C. C. A. 2.
Lien of banks on stock. 56 C. C. A. 179.

LIFE INSURANCE.
Suicide as a defense. 16 C. C. A. 623; 28 C. C. A. 284.
Waiver by acceptance of premiums. 33 C. C. A. 369.

LIMITATION OF ACTIONS.
Against corporate officers. 53 C. C. A. 7.
Bar of action as determined by limitations of state other than that in which action is brought. 58 C. C. A. 186.

LOTTERY.
What constitutes. 12 C. C. A. 346.
Nonmailable matter. 30 C. C. A. 90.

MAIL.
Nonmailable matter. 30 C. C. A. 79.

MANDAMUS.
In aid of appeals. 10 C. C. A. 450.
To enforce payment of judgment against municipality. 25 C. C. A. 475.
Appeal or mandamus. 47 C. C. A. 376.

Digitized by Google

MANUFACTURES.
Liabilities of manufacturers of injurious substances or defective machinery and appliances for injuries to persons other than immediate vendees. 57 C. C. A. 5.
Contracts for sale of things to be manufactured. 58 C. C. A. 363.
Fire escapes on factories. 64 C. C. A. 217.

MARINE INSURANCE.
Perils of the sea. 19 C. C. A. 465.
General average. 20 C. C. A. 357.

MARITIME LIENS.
For supplies and services. 15 C. C. A. 679.
Waiver and extinguishment. 17 C. C. A. 102.
Created by state laws. 21 C. C. A. 21.
For torts. 34 C. C. A. 565.

MARRIAGE.
Effect of existing marriage on subsequent marriage or contract to marry. 50 C. C. A. 583.
Marriage by mutual agreement. 52 C. C. A. 581.

MASTER AND SERVANT.
Who are fellow servants. 8 C. C. A. 668; 31 C. C. A. 286.
Liabilities of carriers for injuries caused by negligence or torts of servants. 10 C. C. A. 466; 27 C. C. A. 651.
Negligence of employé of independent contractor. 28 C. C. A. 392.
Divisibility of contracts for services. 30 C. C. A. 467.
Negligence of both—Division of damages in admiralty. 30 C. C. A. 678.
Duty of railroad companies to furnish safe appliances. 37 C. C. A. 8.
Assumption of risk incident to employment. 38 C. C. A. 314.
Concurrent negligence of master and fellow servant. 40 C. C. A. 236.
Injuries to servant while not on duty. 44 C. C. A. 489.
Duty of railroad companies to block switches. 46 C. C. A. 98.
Who are entitled to liens or preferences as laborers or employés. 47 C. C. A. 2.
What law governs master's liability for injuries to servant. 48 C. C. A. 232.
Liability for injuries to volunteers. 51 C. C. A. 509.
Restraining breach of contract of employé not to engage in competing business. 53 C. C. A. 492.
Contracts relating to liability of master for negligence causing injury to or death of servant. 62 C. C. A. 5.
Mitigation of damages for wrongful discharge from employment by failure of servant to seek or accept other employment. 64 C. C. A. 5.
Fire escapes on buildings. 64 C. C. A. 217.

MASTER AND SERVANT—Cont'd.
Duty of servant to inspect appliances and places for work. 65 C. C. A. 370.

MASTERS IN CHANCERY.
Compensation. 27 C. C. A. 475.

MENTAL SUFFERING.
As an element of damages. 11 C. C. A. 556.
Damages for, by delay in delivering telegram. 11 C. C. A. 571; 15 C. C. A. 250; 28 C. C. A. 62.

MINES AND MINING.
Right of dower in mines. 3 C. C. A. 316.
Mining partnerships. 35 C. C. A. 515.
Conclusiveness of patents for mining claims. 28 C. C. A. 346; 48 C. C. A. 674.

MOBS.
Municipal liability for acts of mobs. 57 C. C. A. 517.

MONOPOLIES.
Constitutional restrictions on grant. 14 C. C. A. 6.
Monopolistic contracts—Validity as affected by public policy. 34 C. C. A. 486.

MORTGAGES.
Equitable mortgages—Agreement to give a mortgage. 18 C. C. A. 458.
Names of parties in deeds and mortgages. 23 C. C. A. 146.
Foreclosure in federal courts. 24 C. C. A. 523.
Distribution of proceeds on foreclosure. 29 C. C. A. 639.
Taxation of. 31 C. C. A. 467.
Subrogation to rights of mortgagee. 42 C. C. A. 304.

MUNICIPAL CORPORATIONS.
Liability for torts of public officers. 14 C. C. A. 534.
Enforcement of judgment against municipality by mandamus. 25 C. C. A. 475.
Dissolution and reincorporation—Effect on indebtedness. 33 C. C. A. 506.
Constitutional and statutory limitations of municipal indebtedness. 36 C. C. A. 6.
Right of taxpayer to enjoin misuse of public funds and property. 38 C. C. A. 458.
Bona fide purchasers of municipal bonds. 41 C. C. A. 6.
Rights of telegraph and telephone companies to use of streets. 44 C. C. A. 155.
Municipal liability for acts of mobs. 57 C. C. A. 517.
Effect of violation of ordinances limiting speed of trains. 59 C. C. A. 5.

NAMES.
Of parties in deeds and mortgages. 23 C. C. A. 146.
Use of person's name as trade-name. 17 C. C. A. 579; 27 C. C. A. 357.

Digitized by Google

NAVIGABLE WATERS.
Obstruction—Jurisdiction of federal courts. 11 C. C. A. 318.

NEGLIGENCE.
Liabilities of carriers for negligence of servants. 10 C. C. A. 466; 27 C. C. A. 651.
Of wife—Liability of husband. 12 C. C. A. 196.
Personal liability of directors. 12 C. C. A. 680; 33 C. C. A. 230.
In transmission of telegram. 14 C. C. A. 177.
Of independent contractor. 28 C. C. A. 392.
Duty of railroads to give warning signals at crossing. 29 C. C. A. 90.
Of both master and servant—Division of damages in admiralty. 30 C. C. A. 678.
Injuries to trespasser on train. 31 C. C. A. 76.
Injuries to one traveling on pass. 31 C. C. A. 164.
Injuries to licensee on train. 31 C. C. A. 164.
Injuries to servant. 31 C. C. A. 286.
Burden of proof where passengers have been injured. 32 C. C. A. 23.
Evidence admissible to show injury to live stock through negligence or accident during transportation. 32 C. C. A. 148.
Imputed to infant. 34 C. C. A. 4.
Sleeping-car companies. 34 C. C. A. 386.
Duty of railroad companies to furnish safe appliances. 37 C. C. A. 8.
Age as affecting contributory negligence. 37 C. C. A. 362.
Concurrent negligence of master and fellow servant. 40 C. C. A. 236.
Care required of motormen. 40 C. C. A. 361.
Presumption from railroad fires. 41 C. C. A. 370.
Injuries to servant not on duty. 44 C. C. A. 489.
Duty of railroad companies to block switches. 46 C. C. A. 98.
Liabilities of charitable institutions for negligence. 47 C. C. A. 134.
What law governs master's liability for injuries to servant. 48 C. C. A. 232.
Liability of employer for injuries to volunteers. 51 C. C. A. 509.
Injuries to railroad passengers while occupying positions other than regular seats. 54 C. C. A. 4.
Injuries to persons at public entertainment or exhibition. 56 C. C. A. 502.
Liabilities of manufacturers and venders of injurious substances or defective machinery and appliances for injuries to persons other than immediate vendees. 57 C. C. A. 5.
In ejection of passengers or trespassers under disability. 62 C. C. A. 422.

NEGLIGENCE—Cont'd.
Liabilities of connecting carriers for injuries to passengers. 64 C. C. A. 485.
Fire escapes on buildings. 64 C. C. A. 217.

NEUTRALITY LAWS.
Object and scope of neutrality law. 28 C. C. A. 622.

NEW TRIAL.
Following state practice. 5 C. C. A. 605; 27 C. C. A. 393.

NON COMPOS MENTIS.
Contracts of persons non compos mentis under guardianship. 34 C. C. A. 264.

NONMAILABLE MATTER.
Obscene matter. 30 C. C. A. 79.
Frauds and counterfeiting. 30 C. C. A. 86.
Lotteries. 30 C. C. A. 90.
Injurious notices. 30 C. C. A. 93.
Threatening and dunning postal cards. 30 C. C. A. 94.

NONRESIDENTS.
Taxation of property. 31 C. C. A. 467.

NOTICE.
Sufficiency of notice of dissolution of partnership. 54 C. C. A. 229.
To agent—Adverse interest, fraud, or collusion of agent. 56 C. C. A. 561.
Time for notice of loss under insurance policy. 55 C. C. A. 376.
Of insurance, premiums, dues, and assessments. 59 C. C. A. 317.

OBITER DICTUM. 64 C. C. A. 361.

OBSCENE MATTER.
Nonmailable matter. 30 C. C. A. 79.

OFFICE AND OFFICER.
Jurisdiction of federal courts in suits against federal officers. 11 C. C. A. 316.
Torts of public officers. 14 C. C. A. 534.
Liabilities of sureties for acts of officers under color of office. 43 C. C. A. 222.
Validity of contracts with public officers as affected by illegality of object or consideration. 56 C. C. A. 10.

ORDERS.
Power of court to amend or modify interlocutory orders and decrees. 61 C. C. A. 236.

PARAPHERNAL PROPERTY.
What constitutes. 31 C. C. A. 40.

PARENT.
Death of child by wrongful act—Damages. 1 C. C. A. 34.

Digitized by Google

PARTIES.
Citizenship as affecting the jurisdiction of the federal courts. 10 C. C. A. 254; 27 C. C. A. 298; 82 C. C. A. 479.
Names of, in deeds and mortgages. 23 C. C. A. 146.
Persons entitled to enforce specific performance. 47 C. C. A. 493.
Persons entitled to injunction restraining or damages for wrongful enforcement of tax. 54 C. C. A. 550.

PARTNERSHIP.
Use of partnership name as trade-name. 17 C. C. A. 579; 27 C. C. A. 357.
Mining partnerships. 35 C. C. A. 515.
Purchase of co-partner's interest. 40 C. C. A. 508.
Liability of partnership for torts of partner. 45 C. C. A. 277.
Power of corporation to form partnership. 50 C. C. A. 131.
Sufficiency of notice of dissolution of partnership. 54 C. C. A. 229.

PASSENGERS.
Duty of carrier to protect from dangerous fellow passengers. 4 C. C. A. 231.
Right of carrier to restrain or expel disorderly passenger. 4 C. C. A. 231.
Duties and liabilities of sleeping-car companies towards. 10 C. C. A. 335; 34 C. C. A. 386.
Rights against carriers for injuries caused by negligence or torts of servants. 10 C. C. A. 466; 27 C. C. A. 651.
Rights of persons traveling on a pass. 31 C. C. A. 164.
Burden of proof of negligence for injuries to. 32 C. C. A. 23.
Limitation of carrier's liability for injuries to passengers. 32 C. C. A. 301.
Limitation of carrier's liability for injuries to passenger by condition on ticket. 32 C. C. A. 302.
Limitation of liability by carrier for injuries to passenger traveling on pass. 32 C. C. A. 305.
Limitation of carrier's liability for injuries to baggage. 32 C. C. A. 308.
Continuance of passenger relation. 40 C. C. A. 437.
Injuries to railroad passengers while occupying positions other than regular seats. 54 C. C. A. 4.
Negligence in ejecting passengers under disability. 62 C. C. A. 422.
Liabilities of connecting carriers for injuries to passengers. 64 C. C. A. 485.

PATENTS.
To public lands—Cancellation. 22 C. C. A. 38.
Conclusiveness of land patents. 28 C. C. A. 346.

PATENTS—Cont'd.
Conclusiveness of patents for mining claims. 28 C. C. A. 346; 48 C. C. A. 674.

PATENTS FOR INVENTIONS.
Effect of previous adjudication on circuit court of appeals. 3 C. C. A. 565; 27 C. C. A. 427; 32 C. C. A. 475.
Review of interlocutory decree granting or continuing injunction in circuit court of appeals. 8 C. C. A. 572; 27 C. C. A. 189; 32 C. C. A. 484.
Jurisdiction of federal courts in suits relating to patents. 11 C. C. A. 313.
Pleading in infringement suits—Demurrer for want of novelty and invention. 19 C. C. A. 595.
Laches as a defense in suits for infringement. 22 C. C. A. 211; 36 C. C. A. 613.
Power of patentee to control his invention. 25 C. C. A. 280.
Contributory infringement of patents. 43 C. C. A. 485.
Accounting by infringer for profits. 50 C. C. A. 8.
Time for application for reissue. 55 C. C. A. 560.
Utility, extent of use, and commercial success as evidence of invention. 59 C. C. A. 620.
Sublicenses and assignments of licenses for use or sale of patents. 64 C. C. A. 596.

PAYMENT.
Implied obligation to pay for benefits received. 2 C. C. A. 488.

PERILS OF THE SEA.
Damages to ship and cargo by vermin. 18 C. C. A. 231; 19 C. C. A. 473.
Damages to ship and cargo through various causes. 19 C. C. A. 465; 64 C. C. A. 118.

PLEADING.
Following state practice. 5 C. C. A. 594; 27 C. C. A. 392.
Averments of citizenship to show jurisdiction in federal courts. 10 C. C. A. 261; 27 C. C. A. 303.
In patent infringement suits—Demurrer for want of novelty and invention. 19 C. C. A. 595.

PLEDGES.
Rights and liabilities of pledgees of corporate stock. 42 C. C. A. 135.

POST OFFICE.
Nonmailable matter. 30 C. C. A. 79.

PRACTICE.
As regulated by state laws. 1 C. C. A. 515; 5 C. C. A. 594; 9 C. C. A. 548; 27 C. C. A. 392.

PREJUDICE.
As ground for removal of causes. 8 C. C. A. 95.

Digitized by Google

PRINCIPAL AND AGENT.
Agency implied from course of dealing. 42 C. C. A. 221.
Liability of principal for torts of agent. 43 C. C. A. 316.
Knowledge of agent as notice to principal—Effect of adverse interest, fraud, or collusion of agent. 56 C. C. A. 561.

PRINCIPAL AND SURETY.
Liabilities of sureties for acts of officers under color of office. 43 C. C. A. 222.
Death of surety. 49 C. C. A. 591.
Liability of sureties for interest, costs, and attorney's fees. 51 C. C. A. 248.
Discharge of surety on building contract by change in obligation or duty of principal. 52 C. C. A. 427.

PROBATE.
Jurisdiction of federal courts. 36 C. C. A. 276.

PROCESS.
Following state practice. 5 C. C. A. 599; 27 C. C. A. 393.
Service on foreign corporations. 45 C. C. A. 3.

PROPERTY.
Obtaining possession or establishing title to personal property in equity. 58 C. C. A. 101.

PUBLIC FUNDS.
Right of taxpayer to enjoin misuse of public funds and property. 38 C. C. A. 458.

PUBLIC LANDS.
Liability of purchaser holding equitable title to state taxation. 4 C. C. A. 196.
Not subject to state taxation. 4 C. C. A. 196.
Jurisdiction of federal courts in suits under public land laws. 11 C. C. A. 314.
Decisions of land department—Their conclusiveness and effect. 22 C. C. A. 38; 28 C. C. A. 344; 57 C. C. A. 207.
Rights acquired by homestead settlements and entries. 59 C. C. A. 434.

PUBLIC POLICY.
As affecting contracts. 9 C. C. A. 666; 34 C. C. A. 486.
Contracts for lobby services. 29 C. C. A. 446.
As affecting monopolistic contracts. 34 C. C. A. 486.

QUIETING TITLE.
Necessity of possession in suits to quiet title. 39 C. C. A. 522.

RAILROADS. (See "Carriers.")
When land grants taxable. 4 C. C. A. 196.
Duty to give warning signals at crossing. 29 C. C. A. 90.

RAILROADS—Cont'd.
Rights of trespassers on trains. 31 C. C. A. 76.
Duty of railroad companies to furnish safe appliances. 37 C. C. A. 8.
Location and establishment of stations. 41 C. C. A. 219.
Presumption of negligence from fires. 41 C. C. A. 370.
Injuries to persons at stations. 41 C. C. A. 550.
Abandonment or forfeiture of right of way. 42 C. C. A. 576.
Duty of railroad companies to block switches. 46 C. C. A. 98.
Liability of railroad or street car companies for ejection of trespassers. 51 C. C. A. 578.
Effect of violation of statutes and ordinances regulating speed of trains. 59 C. C. A. 5.
Negligence in ejecting trespassers under disability. 62 C. C. A. 422.
Acquisition or loss of right to railroad right of way by prescription. 63 C. C. A. 7.

RECEIVERS.
Citizenship as affecting the jurisdiction of the federal courts. 10 C. C. A. 253.
Actions by and against receivers of federal courts. 26 C. C. A. 49.
Nature of certificates. 26 C. C. A. 350.
Actions by and against receivers and "agents" of national banks. 53 C. C. A. 398.
Preservation and prevention of removal of property beyond jurisdiction pending litigation as ground for appointment of receiver. 57 C. C. A. 80.

RECORDS.
Access to public records. 49 C. C. A. 210.

REFERENCE.
Following state practice. 27 C. C. A. 392.

REMOVAL OF CAUSES.
As restricted by state laws. 1 C. C. A. 515.
For prejudice or local influence. 8 C. C. A. 95.
Separable controversy. 18 C. C. A. 86; 35 C. C. A. 155.
Actions against federal receivers. 26 C. C. A. 49.
Distinctions between legal and equitable remedies in actions removed to federal courts. 63 C. C. A. 204.

REPEAL OF STATUTES.
Repeal of statutes by implication. 38 C. C. A. 136.

REVIEW.
Necessity of leave to file bill of review after decision on appeal. 4 C. C. A. 72.
In bankruptcy cases. 43 C. C. A. 9.

Digitized by Google

RISKS.
Assumption of risk incident to employment. 38 C. C. A. 314.

SALE.
Of patent. 25 C. C. A. 280.
Divisibility of contracts. 30 C. C. A. 470.
Liabilities of venders of injurious substances or defective machinery and appliances for injuries to persons other than immediate vendees. 57 C. C. A. 5.
Contracts for sale of things to be produced or manufactured. 58 C. C. A. 363.

SALVAGE.
Awards in federal courts. 36 C. C. A. 280.

SEAMEN.
Negligence of both master and servant —Division of damages in admiralty. 30 C. C. A. 678.

SEPARABLE CONTROVERSIES.
As ground for removal of cause. 18 C. C. A. 86; 35 C. C. A. 155.

SEPARATION AGREEMENTS. 38 C. C. A. 608.

SET-OFF AND COUNTERCLAIM.
Restraining enforcement of judgment pending establishment or enforcement of set-off or counterclaim. 58 C. C. A. 532.

SHAREHOLDERS.
In national banks. 15 C. C. A. 130; 46 C. C. A. 503.

SHIPPING.
Quick dispatch. 14 C. C. A. 657; 21 C. C. A. 342.
Implied warranty of seaworthiness. 15 C. C. A. 388; 60 C. C. A. 179.
Damages to ships and cargoes by vermin. 18 C. C. A. 231; 19 C. C. A. 473.
Admiralty jurisdiction over contracts. 18 C. C. A. 347; 27 C. C. A. 530.
Loss by perils of the sea. 19 C. C. A. 465; 64 C. C. A. 118.
General average. 20 C. C. A. 357.
Demurrage. 14 C. C. A. 657; 21 C. C. A. 337; 46 C. C. A. 4.
Carriers by water. 20 C. C. A. 535.
Limitation of owner's liability. 45 C. C. A. 387.
Statutory exemptions of shipowners from liability. 49 C. C. A. 11.
Demise of vessel. 55 C. C. A. 225.
Cancellation, surrender, or rescission of charter of vessel. 61 C. C. A. 569.

SIGNALS.
At railroad crossings. 29 C. C. A. 90.

SLEEPING-CAR COMPANIES.
Their duties and liabilities towards their passengers. 10 C. C. A. 335; 34 C. C. A. 386.

SPECIFIC PERFORMANCE.
Persons entitled to enforce specific performance. 47 C. C. A. 493.
Of contracts requiring performance of continuous acts. 49 C. C. A. 103.
Of contracts of which time is the essence. 63 C. C. A. 562.
Necessity of tender of performance. 65 C. C. A. 91.

STATE COURTS.
Proceedings enjoined by federal courts. 16 C. C. A. 90; 27 C. C. A. 575; 63 C. C. A. 437.
Jurisdiction of state courts to enforce maritime liens under state laws. 21 C. C. A. 21.
Conclusiveness of judgments between federal and state courts. 21 C. C. A. 478; 49 C. C. A. 468.
Conflict of jurisdiction with federal courts. 22 C. C. A. 356.
Restraining proceedings in federal courts. 45 C. C. A. 591.

STATES.
Federal jurisdiction in suit against state. 13 C. C. A. 165.
Estoppel against. 16 C. C. A. 353.

STATUTES.
Construction of statutes—State laws as rules of decision in federal courts. 11 C. C. A. 72.
Constitutional and statutory limitations of municipal indebtedness. 36 C. C. A. 6.
Statutory exemptions of building and loan associations from operation of usury laws. 36 C. C. A. 343.
Repeal of statutes by implication. 38 C. C. A. 136.
Power of legislature to pass curative statutes. 39 C. C. A. 180.
Amendment of amended, repealed, or invalid statutes. 44 C. C. A. 590.
Effect of violation of statutes limiting speed of trains. 59 C. C. A. 5.
Construction of statutes as affected by mistakes in writing, grammar, spelling, and punctuation. 65 C. C. A. 237.
History and passage of statutes and contemporary circumstances as aids to construction. 65 C. C. A. 535.

STOCKHOLDERS.
Liability to creditors of corporation. 23 C. C. A. 315; 33 C. C. A. 23.
Enforcement of statutory liability of stockholders in national banks. 52 C. C. A. 6.
Effect of judgment against corporation in action to enforce stockholder's liability. 52 C. C. A. 305.
Liability of transferrors and transferees of corporate stock for assessments. 61 C. C. A. 322.

STREET RAILROADS.
Care required of motormen. 40 C. C. A. 361.

Digitized by Google

SUBROGATION.
To rights of mortgagee. 42 C. C. A. 304.
Of insurer under assignment of rights of insured. 65 C. C. A. 615.

SUICIDE.
As a defense to a suit for life insurance. 16 C. C. A. 623; 28 C. C. A. 284.

SUNDAY.
As dies non juridicus. 12 C. C. A. 462.

SUPREME COURT.
Certiorari to circuit court of appeals. 1 C. C. A. 5.
Jurisdiction. 1 C. C. A. 9, 11.
Review of jurisdiction of circuit courts. 48 C. C. A. 351.

TARIFF LAWS.
Interpretation of commercial and trade terms. 18 C. C. A. 545.

TAXATION.
Of railroad land grants. 4 C. C. A. 196.
Of equitable title to public lands. 4 C. C. A. 196.
Lands of the United States not subject to state taxation. 4 C. C. A. 196.
Due process of law. 8 C. C. A. 398.
Notice of equalization. 8 C. C. A. 400.
Forfeiture for nonpayment. 8 C. C. A. 401.
Regulation and taxation of interstate commerce by state. 8 C. C. A. 492; 24 C. C. A. 21.
Limitations of taxing power from mutual independence of federal and state governments. 23 C. C. A. 515.
Of foreign corporations. 24 C. C. A. 13.
Tax deed as color of title. 24 C. C. A. 402.
Of intangible property of nonresidents. 31 C. C. A. 467.
Persons entitled to injunction restraining or damages for wrongful enforcement of tax. 54 C. C. A. 550.
Of bank deposits. 60 C. C. A. 413.

TELEGRAPHS AND TELEPHONES.
Measure of damages in actions against telegraph and telephone companies. 15 C. C. A. 235; 28 C. C. A. 59.
Damages for mental suffering from delay in delivering telegram. 11 C. C. A. 571; 15 C. C. A. 250; 28 C. C. A. 62.
Delay in transmission of message—Failure to disclose that line was not in working order. 14 C. C. A. 177.
Rights of telegraph and telephone companies to use of streets. 44 C. C. A. 155.

THREATENING POSTAL CARDS.
Nonmailable matter. 30 C. C. A. 94.

TITLE INSURANCE. 19 C. C. A. 278.

TORTS.
Liabilities of carriers for negligence and torts of servants. 10 C. C. A. 466; 27 C. C. A. 651.
Of wife—Liability of husband. 12 C. C. A. 196.
Municipal liability for torts of public officers. 14 C. C. A. 534.
As affecting demurrage. 21 C. C. A. 345.
Maritime liens for torts. 34 C. C. A. 565.
Liability of corporation for torts. 39 C. C. A. 9.
Liability of principal for torts of agent. 43 C. C. A. 316.
Liabilities of charitable institutions for negligence. 47 C. C. A. 134.
Admiralty jurisdiction. 62 C. C. A. 279.

TRADE-MARKS AND TRADE-NAMES.
Contracts relating to use. 14 C. C. A. 104.
Assignment of right to use a person's name. 17 C. C. A. 579; 27 C. C. A. 360.
Right to use one's own name. 17 C. C. A. 579; 27 C. C. A. 357.
Use of corporate and firm names. 17 C. C. A. 579; 27 C. C. A. 357.
Use of geographical names. 17 C. C. A. 657; 35 C. C. A. 242.
Unfair competition. 20 C. C. A. 165; 30 C. C. A. 376.
Laches as a defense in suits for infringement. 22 C. C. A. 211; 36 C. C. A. 613.
Misleading or false labels. 29 C. C. A. 250.
Abandonment. 33 C. C. A. 294.
Arbitrary, descriptive, or fictitious character of trade-marks and trade-names. 50 C. C. A. 323.

TRADE SECRETS.
Disclosure. 58 C. C. A. 8.

TRESPASSER.
Rights of trespasser on train. 31 C. C. A. 76.
Liability of railroads or street car companies for ejection of trespassers. 51 C. C. A. 578.
Negligence in ejecting trespasser under disability. 62 C. C. A. 422.

TRIAL.
Jury trial in federal court. 5 C. C. A. 603; 26 C. C. A. 528; 27 C. C. A. 393.
Instructing jury and receiving verdict on Sunday. 12 C. C. A. 462.
Comments of counsel on failure to produce witness. 13 C. C. A. 589.
Trial by jury in criminal prosecutions. 39 C. C. A. 275.

TRUSTEES.
Citizenship as affecting the jurisdiction of the federal courts. 10 C. C. A. 252; 27 C. C. A. 300.

Digitized by Google

TRUSTS.
Assets of corporation when trust fund for creditors. 23 C. C. A. 315.

UNITED STATES.
Estoppel against. 16 C. C. A. 353.
Assignment of claims and government contracts. 22 C. C. A. 650.

USURY.
Statutory exemptions of building and loan associations from operation of usury laws. 36 C. C. A. 343.
What law governs usury by building and loan associations. 51 C. C. A. 319.

VENDOR AND PURCHASER.
Marketable title. 40 C. C. A. 592.
Liabilities of venders of injurious substances or defective machinery and appliances for injuries to persons other than immediate vendees. 57 C. C. A. 5.

WAIVER.
Of prepayment of insurance premiums. 13 C. C. A. 292.
Of maritime liens. 17 C. C. A. 102.
Of conditions of insurance. 27 C. C. A. 46.
Of defense by acceptance of premiums. 33 C. C. A. 369.
Of trial by jury in criminal prosecutions. 39 C. C. A. 281.
Of right as to district in which suit may be brought. 52 C. C. A. 192.

WAR.
The neutrality laws. 28 C. C. A. 622.

WAREHOUSEMEN.
Liability of carriers as. 20 C. C. A. 529.

WATERS AND WATER COURSES.
Pollution of water courses. 37 C. C. A. 538.
Abandonment of water rights. 45 C. C. A. 190.

WIFE.
Death of husband by wrongful act—Damages. 1 C. C. A. 33.
Liability of husband for torts of. 12 C. C. A. 196.

WILLS.
Probate jurisdiction of federal courts. 36 C. C. A. 276.

WITNESS.
Competency in federal courts—Following state practice. 5 C. C. A. 602; 21 C. C. A. 278.
Method of summoning — Following state practice. 5 C. C. A. 602.
Comments of counsel in argument on failure to produce. 13 C. C. A. 589.
Competency of, as to general reputation. 53 C. C. A. 109.

WRITS.
Form and service of process. 5 C. C. A. 594.
Issue and service on Sunday. 12 C. C. A. 462.

Digitized by Google

NOTES IN THIS VOLUME.

Page

Citizenship of Married Women..... 5

Necessity of Tender of Performance by Party Seeking Specific Performance of Contract..... 91

Construction of Statutes as Affected by Mistakes in Writing, Grammar, Spelling, or Punctuation..... 237

Duty of Servant to Inspect Appliances and Places to Work... 370

History and Passage of Statutes and Contemporary Circumstances as Aids to Construction..... 535

Subrogation of Insurer under Assignment of Rights of Insured 615

Digitized by Google

Digitized by Google

CASES

ARGUED AND DETERMINED

IN THE

UNITED STATES CIRCUIT COURTS OF APPEALS.

(130 Fed. 839.)

HOPKINS, U. S. Marshal, et al. v. FACHANT.

(Circuit Court of Appeals, Ninth Circuit. May 2, 1904.)

No. 1,003.

1. ALIENS—DEPORTATION—POWERS OF ADMINISTRATIVE OFFICERS.

The Alien Immigration Act of March 3, 1903, c. 1012, § 21, 32 Stat. 1218 [U. S. Comp. St. Supp. 1903, p. 180], does not confer authority on the Secretary of the Treasury to arbitrarily order the deportation of an alien who has entered this country and become a part of its population without giving such alien an opportunity to be heard on the questions involving his or her right to be and remain in the United States in such manner as is consistent with the principles that inhere in due process of law.

2. SAME—MARRIAGE OF ALIEN TO CITIZEN—RIGHT TO DISCHARGE FROM CUSTODY.

Where an alien woman, who has come into this country, pending proceedings for her deportation under the immigration laws, marries a citizen of the United States, she at once takes the status of her husband, and, unless released from custody, is entitled to be discharged on a writ of habeas corpus.

Appeal from the District Court of the United States for the Northern Division of the District of Washington.

Appellants take this appeal from an order made by the District Court discharging appellee from custody upon habeas corpus. Her petition for the

---

¶ 2. Citizenship under state and federal laws, see note to City of Minneapolis v. Reum, 6 C. C. A. 37, and note at end of case.

Digitized by Google

writ of habeas corpus is very lengthy, but the essential points therein may be briefly stated. In said petition it is alleged that Alexander Fachant was born in the republic of France, "but is now, and during all the times herein mentioned was, a naturalized citizen of the United States of America, and has been domiciled in the United States of America for about eighteen years last past, and is now, and during all the times herein mentioned was, a bona fide citizen and resident of the district of Washington"; that in April, 1903, at Paris, this petitioner, at the request of Alexander Fachant, entered into a contract of marriage with him, and that she agreed with him to come to the United States for the purpose of the consummation of such marriage relation; that upon her arrival in the city of Walla Walla, Wash., the said Alexander Fachant refused to make her his lawful wife; that she thereafter brought suit against said Fachant to recover $15,000 damages for the breach of said marriage contract; that said Alexander Fachant made default, but that for reasons stated she had been unable to have a jury trial in order to assess the damages to which she was entitled. It then sets forth the facts in regard to her arrest for the purpose of being deported under the immigration laws of the United States, and alleges that her deportation would be "in violation of the existing treaties between the United States of America and the republic of France," etc.; and she prays upon the hearing of her petition to be released from custody and restored to her liberty. The order of discharge, as made by the court, after a preliminary statement of the appearance of the respective parties, states that appellants herein "having made return ore tenus on behalf of the said respondents, and each of them, to the effect that the said Blanche Masclez had been held and retained in custody by the said Charles B. Hopkins, United States Marshal for the District of Washington, as a detained witness in the case of the United States vs. Alexander Fachant, pending in the District Court of the United States for the District of Washington, Northern Division, in pursuance of a commitment duly issued by United States Commissioner H. B. Strong, and that the said Blanche Masclez had been held and was being held by the respondents, Thomas M. Fisher and J. H. Sargent, immigration officers of the United States, and the Mother Superior of the House of Good Shepherd, as an alien immigrant unlawfully within the United States, and as such subject to deportation to the republic of France, the country whence she came, and under and by virtue of a certain warrant of deportation duly issued by the Secretary of the Treasury of the United States, on the 28th day of May, 1903, directed to the said Thomas M. Fisher, Chinese and immigrant inspector, wherein it is found by the said Secretary of the Treasury that the said Blanche Masclez is an alien immigrant, who landed in the United States at the port of New York, N. Y., on the 2d day of May, 1903, and came into the United States from the republic of France, contrary to the immigration laws of the United States, and commanding him, the said Thomas M. Fisher, as such immigrant inspector, to take into his custody the said Blanche Masclez as such alien immigrant, and return her to the country whence she came, which said warrant of deportation is still in force; and said respondents, in making return to the said writ of habeas corpus, having denied the allegations set forth in said petition herein as to the rights of the said Blanche Masclez to be and remain in the United States. And the court having taken into consideration the evidence admitted upon the trial of the case of the United States vs. Alexander Fachant, together with the fact of the marriage of the said Blanche Masclez to the said Alexander Fachant subsequent to the issuance of the writ herein, and being fully advised in the premises, and having found from a consideration of all the foregoing facts that the said Blanche Masclez is entitled to be and remain in the United States, and therefore not subject to deportation under the writ of deportation heretofore issued by the Secretary of the Treasury of the United States, but entitled to her full liberty: Now, therefore, it is hereby ordered that the said Blanche Masclez, petitioner above named, be, and she hereby is, discharged from the custody of the respondents herein, and restored to her full liberty."

Jesse A. Frye, U. S. Atty., and Edward E. Cushman, Asst. U. S. Atty., for appellants.

Digitized by Google

Silas M. Shipley, Will H. Morris, and Frank S. Southard, for appellee.

Before GILBERT and ROSS, Circuit Judges, and HAWLEY, District Judge.

HAWLEY, District Judge (after making the foregoing statement). Appellee moves that the appeal herein be dismissed upon the grounds that this court is without jurisdiction to hear and determine the matters involved upon this appeal, for the reason and upon the ground that the determination of the case involves the construction and application of the Constitution of the United States and the constitutionality of the law of the United States passed March 3, 1903, c. 1012, 32 Stat. 1213 [U. S. Comp. St. Supp. 1903, p. 170], being "An act to regulate the immigration of aliens into the United States," and also the construction of the treaty existing between the United States and the republic of France, and the rights of appellee thereunder; and, further, that the right to hear and determine the matters involved upon this appeal is by statute vested in the Supreme Court of the United States exclusively.

It is questionable, to say the least, whether, in the face of all the facts set out in the petition for habeas corpus, especially after her marriage to Alexander Fachant, appellee is shown to have any property rights which would involve any construction of the treaty referred to. But be that as it may, the determination of this case also depends upon other questions, which have no relation whatever with the provisions of the treaty. It is claimed by appellants that the only question involved in this case is, "Did the court below exceed its authority and jurisdiction in interfering with the Secretary of the Treasury in his administration of the immigration laws?" In view of all the facts stated in the petition and contained in the record of the case on appeal, we are of opinion that the motion of appellee to dismiss should be, and is, denied.

Upon the merits of this case appellants contend that Congress, by the act of March 3, 1903, has committed to the Secretary of the Treasury the execution of the law in question, without the aid or intervention of the courts, and has given to the Secretary of the Treasury of the United States power, not only to finally determine what aliens are excluded by the law, and to refuse such a landing, but also the authority to arrest and investigate and send out of the country, within the specified time, any alien immigrant who has secured entrance into the United States in violation of law; and cites the following cases in support of this contention: United States v. Yamasaka, 100 Fed. 404, 40 C. C. A. 454; Nishimura Ekiu v. United States, 142 U. S. 651, 12 Sup. Ct. 336, 35 L. Ed. 1146; Fong Yue Ting v. United States, 149 U. S. 698, 13 Sup. Ct. 1016, 37 L. Ed. 905; Lem Moon Sing v. United States, 158 U. S. 538, 15 Sup. Ct. 967, 39 L. Ed. 1082; Wong Wing v. United States, 163 U. S. 228, 16 Sup. Ct. 977, 41 L. Ed. 140; Fok Yung Yo v. United States, 185 U. S. 296, 22 Sup. Ct. 686, 46 L. Ed. 917; The Japanese Immigrant Case, 189 U. S. 86, 23 Sup. Ct. 611, 47 L. Ed. 721. Appellants claim that the court below, under these authorities, should

Digitized by Google

have denied the writ, and remanded appellee to the custody of appellant Fisher for deportation in pursuance of the warrant of deportation issued by the Secretary of the Treasury. It nowhere appears from the record that appellee has been given an opportunity to be heard before any officer or tribunal, either executive or judicial. The rigid construction of the act suggested by appellants is not justified by any of the decisions cited. In The Japanese Immigrant Case, 189 U. S. 86, 99, 100, 23 Sup. Ct. 611, 47 L. Ed. 721, the question herein involved was fully discussed. In the course of the opinion the court said:

"It has been settled that the power to exclude or expel aliens belonged to the political department of the government, and that the order of an executive officer, invested with the power to determine finally the facts upon which an alien's right to enter this country or remain in it depended, was 'due process of law. and no other tribunal, unless expressly authorized by law to do so, was at liberty to re-examine the evidence on which he acted, or to controvert its sufficiency.' Fong Yue Ting v. United States, 149 U. S. 698, 713, 13 Sup. Ct. 1016, 37 L. Ed. 905; Nishimura Ekiu v. United States, 142 U. S. 651, 659, 12 Sup. Ct. 336, 35 L. Ed. 1146; Lem Moon Sing v. United States, 158 U. S. 538, 547, 15 Sup. Ct. 967, 39 L. Ed. 1082. But this court has never held, nor must we now be understood as holding, that administrative officers, when executing the provisions of a statute involving the liberty of persons, may disregard the fundamental principles that inhere in 'due process of law,' as understood at the time of the adoption of the Constitution. * * * It is not competent for the Secretary of the Treasury, or any executive officer, at any time within the year limited by the statute, arbitrarily to cause an alien who has entered the country and has become subject in all respects to its jurisdiction, and a part of its population, although alleged to be illegally here, to be taken into custody and deported without giving him all opportunity to be heard upon the questions involving his right to be and remain in the United States. No such arbitrary power can exist where the principles involved in due process of law are recognized. This is the reasonable construction of the acts of Congress here in question, and they need not be otherwise interpreted. In the case of all acts of Congress such interpretation ought to be adopted as, without doing violence to the import of the words used, will bring them into harmony with the Constitution."

In the recent case of Gonzales v. Williams, U. S. Commissioner of Immigration, 192 U. S. 1, 15, 24 Sup. Ct. 177, 48 L. Ed. 317, which was an appeal by Isabella Gonzales from an order of the Circuit Court of the United States for the Southern District of New York dismissing a writ of habeas corpus issued on her behalf and remanding her to the custody of the United States Commissioner of Immigration at the port of New York (118 Fed. 941), the court, among other things, said:

"As Gonzales did not come within the act of 1891, the commissioner had no jurisdiction to detain and deport her by deciding the mere question of law to the contrary; and she was not obliged to resort to the superintendent or the secretary. Our conclusion is not affected by the provision in the sundry civil act of August 18, 1894, c. 301, § 1, 28 Stat. 372, 390 [U. S. Comp. St. 1901, p. 1303] in relation to the finality of the decisions of the appropriate immigration or custom officers, or the similar provision in the act 'to regulate the immigration of aliens into the United States,' approved March 3, 1903, c. 1012, 32 Stat. 1213 [U. S. Comp. St. Supp. 1903, p. 170]."

Did the court err in discharging appellee from custody? It will be observed by reference to the statement of facts that no particular ground upon which the court below based its order for discharging her is stated; but it does affirmatively appear that pending the application for her release under the writ of habeas corpus she was married to

Digitized by Google

Alexander Fachant, who is stated in the petition for the writ to be "a naturalized citizen of the United States of America." It is claimed by appellants that this statement was denied by their return to the writ ore tenus, and that no testimony was offered by either of the parties upon the question of his naturalization. But an examination of the facts shows that appellants did not deny this fact in their return to the writ. Their denial was confined to "the allegations set forth in said petition herein as to the rights of the said Blanche Masclez to be and remain in the United States." Her rights to be and remain in the United States under her petition were based solely upon the fact that she had brought suit against Alexander Fachant, who was a man of wealth, for damages for a breach of his promise to marry her, and that he had made default, and that her deportation under those circumstances would deprive her of substantial rights, and be "in violation of the existing treaties between the United States of America and the Republic of France." The court had the right to take the fact alleged in the petition, and not denied by the return, to be true. The rule is well settled that her marriage to a naturalized citizen of the United States entitled her to be discharged. The status of the wife follows that of her husband. Rev. St. § 1994 [U. S. Comp. St. 1901, p. 1268]; Leonard v. Grant (C. C.) 5 Fed. 11; Kelly v. Owen, 7 Wall. 496, 19 L. Ed. 283; United States v. Kellar (C. C.) 13 Fed. 82; Ware v. Wisner (C. C.) 50 Fed. 310; Broadis v. Broadis (C. C.) 86 Fed. 951. And by virtue of her marriage her husband's domicile became her domicile. Tsoi Sim v. United States, 116 Fed. 920, 54 C. C. A. 154. Upon all the facts of this case, it is apparent that the court did not err in discharging appellee from custody.

The judgment of the District Court is affirmed.

NOTE.

Citizenship of Married Women.

I. In General.

[a] (Ill. 1898) A vote cast by an alien woman before her marriage to a citizen is illegal.—Dorsey v. Brigham, 52 N. E. 303, 177 Ill. 250, 42 L. R. A. 809, 69 Am. St. Rep. 228.

[b] (Ky. 1839) A woman went with her husband to Texas, where the latter died after two or three years' residence. The woman remained about ten years longer, in the course of which time new forms of government were established there, to which she was presumed to have been a party. She then returned to Kentucky for a temporary purpose. *Held*, that these facts are sufficient evidence, prima facie, of her expatriation.—Alsberry v. Hawkins, 39 Ky. (9 Dana) 177, 33 Am. Dec. 546.

[c] (Ky. 1845) The removal of a wife with her husband from the United States, and remaining abroad with her husband, who had renounced his citizenship of the United States and died out of the United States, is prima facie evidence of expatriation of the wife, which is repelled, however, by the fact that within a short time after the husband's death she returned to the United States, and evinced no intention of leaving the country.—Moore v. Tisdale, 44 Ky. (5 B. Mon.) 352.

[d] (N. Y. 1800) Where the husband had resided in the United States both before and after the 4th of July, 1776, but the wife had always continued in the dominions of the King of Great Britain, she was held an alien.—Kelly v. Harrison, 2 Johns. Cas. 29, 1 Am. Dec. 154.

Digitized by Google

II. Marriage of Alien Woman to Citizen.

[a] An alien white woman, and not an alien enemy, who marries a citizen of the United States, is a citizen of the United States, although she has always resided in her native country.

—(N. Y. 1864) Burton v. Burton, *40 N. Y. (1 Keyes) 359; (1879) Renner v. Muller, 44 N. Y. Super. Ct. (12 Jones & S.) 535;
(N. C. 1869) Kane v. McCarthy, 63 N. C. 299.

[b] (U. S. 1868) The terms "married," and "who shall be married," in Act Cong. Feb. 10, 1855, mean that whenever a woman who, under previous acts, might be naturalized, is in a state of marriage to a citizen, she becomes by that fact a citizen also. His citizenship, whenever it exists, confers, under the act, citizenship on her.—Kelly v. Owen, 74 U. S. (7 Wall.) 496, 19 L. Ed. 283, affirming (1867) 6 D. C. 191.

[c] (U. S. 1880) Under Act Feb. 10, 1875, § 2 (Rev. St. § 1994 [U. S. Comp. St. 1901, p. 1268]), an alien woman of the race or class of persons that are entitled to be naturalized under existing laws, who is married to a citizen of the United States, becomes by that act a citizen of the United States: and such admission to citizenship has the same force and effect as if such woman had been naturalized by the judgment of a competent court.—Leonard v. Grant (C. C.) 5 Fed. 11.

[d] (U. S. 1880) The clause in the federal statute, "might herself be lawfully naturalized," does not require that the woman shall have the qualifications of residence, good character, etc., as in case of admission to citizenship in a judicial proceeding, but it is sufficient if she is of the class or race of persons who may be naturalized under existing laws.—Leonard v. Grant (C. C.) 5 Fed. 11.

[e] (U. S. 1882) Upon the marriage of a resident alien woman with a naturalized citizen, she, as well as her infant son, dwelling in this country, become citizens of the United States as fully as if they had become such in the special mode prescribed by the naturalization laws.—United States v. Kellar (C. C.) 13 Fed. 82.

[f] (U. S. 1883) A nonresident alien woman who marries a citizen of the United States thereby becomes a citizen of the United States, under Rev. St. § 1994 [U. S. Comp. St. 1901, p. 1268].—Ware v. Wisner (C. C.) 50 Fed. 310.

[g] (U. S. 1898) Section 1994, Rev. St. U. S. [U. S. Comp. St. 1901, p. 1268], providing that "any woman who is now or hereafter may be married to a citizen of the United States, and who might herself be lawfully naturalized, shall be deemed a citizen," applies to women of African blood since the act of July 14, 1870, extending the naturalization laws to persons of African birth or descent.—Broadis v. Broadis, 86 Fed. 951.

[h] (D. C. 1867) Act Cong. Feb. 10, 1855, § 2, declaring that "any woman who might lawfully be naturalized under the existing laws, married, or who shall be married, to a citizen of the United States, shall be deemed and taken to be a citizen," applies to every woman of white blood married at the time of its passage, or who should afterwards marry, a citizen of the United States.—Owen v. Kelly, 6 D. C. 191, affirmed in (1868) 74 U. S. (7 Wall.) 496, 19 L. Ed. 283.

[i] (Ga. 1879) An alien woman, whose husband becomes a naturalized citizen of the United States, is, under section 2 of the act of congress of 1855, thereby made a citizen, though she may live at a distance from her husband for years, and never come to the United States until after his death.—Headman v. Rose, 63 Ga. 458.

[j] (Ill. 1898) Rev. St. U. S. tit. 25, § 1994 [U. S. Comp. St. 1901, p. 1268], providing that any woman married to a citizen, and who might herself be naturalized, shall be deemed a citizen, is a uniform rule, within Const. U. S. art. 1, § 8, conferring upon Congress the power to establish a uniform rule of naturalization, even though Congress has provided for the naturalization of aliens, both male and female, by a judicial proceeding.—Dorsey v. Brigham, 52 N. E. 303, 177 Ill. 250, 42 L. R. A. 809, 69 Am. St. Rep. 228.

[k] (Ky. 1859) Naturalization is a personal privilege, and the alien wife does not become a naturalized citizen by the naturalization of the husband.—White v. White, 59 Ky. (2 Metc.) 185.

Digitized by Google

[l] (N. Y. 1879) Under the naturalization laws, a woman who is an alien acquires citizenship whenever her husband becomes a citizen. It makes no difference that she is not 21 years of age.—Renner v. Muller, 44 N. Y. Super. Ct. (12 Jones & S.) 535.

[m] (N. Y. 1885) Under Rev. St. U. S. § 1994 [U. S. Comp. St. 1901, p. 1268], the wife of an alien becomes a citizen upon the naturalization of her husband.—People v. Newell, 38 Hun. 78.

[n] (N. C. 1869) Under Act Cong. Feb. 10, 1865, the words, "married or who shall be married to a citizen of the United States," include a woman who, having been born an alien, in 1851 married another alien, who declared his intention to become a citizen in 1853, and was naturalized in 1856.—Kane v. McCarthy, 63 N. C. 299.

III. Marriage of Woman Who is a Citizen to an Alien.

[a] (U. S. 1830) A woman does not lose her national character by marrying an alien, whether friend or enemy.—Shanks v. Dupont, 28 U. S. (3 Pet.) 242, 7 L. Ed. 666, reversing (1824) Harp. Eq. 5.

[b] (U. S. 1902) The political status of a native-born American woman who marries a citizen of France or England, and removes with him to his country, follows that of her husband. Judgment, Ruckgaber v. Moore (C. C. 1900) 104 Fed. 947, 31 Civ. Proc. R. 310, affirmed.—Moore v. Ruckgaher, 114 Fed. 1020, 52 C. C. A. 587.

[c] (U. S. 1883) An alien woman who has once become an American citizen by operation of law, viz. by a marriage, which is subsequently dissolved, may resume her alienage by a marriage to an unnaturalized native of her own country.—Pequignot v. City of Detroit, 16 Fed. 211.

[d] (U. S. 1883) Where plaintiff, a native of France, came to this country in her childhood, and was afterwards married to an American citizen, this marriage was dissolved, and she was again married to a native-born French citizen, it was *held* that she was an alien, and competent to sue in the federal court, notwithstanding she and her husband continued to reside in this country.—Pequignot v. City of Detroit (C. C.) 16 Fed. 211.

[e] (U. S. 1893) Plaintiff, a native citizen of Louisiana, married a native-born subject of Italy, who, prior thereto, had come to Louisiana, and engaged in business, without intending ever to return to Italy, though he was not naturalized. After her marriage, she and her husband, until his death, lived together in Louisiana, without any intention on the part of either to depart therefrom or ever to reside elsewhere, and she, after his death, continued to live there. *Held*, that she was not an alien.—Comitis v. Parkerson (C. C.) 56 Fed. 556, 22 L. R. A. 148.

[f] (N. Y. 1850) Neither the marriage of a female with an alien husband nor her residence in a foreign country will constitute her an alien.—Beck v. McGillis, 9 Barb. 35.

Digitized by Google

(130 Fed. 536.)

McKEE v. CHAUTAUQUA ASSEMBLY et al.

(Circuit Court of Appeals, Second Circuit. April 20, 1904.)

No. 142.

1. CORPORATIONS—POWERS OF DIRECTORS—RIGHTS OF STOCKHOLDERS.
As to all matters of management and control within the scope of the powers delegated to the trustees or directors of a corporation by its charter, the affairs of the corporation are committed to their judgment and discretion, and the courts cannot sit in review of their errors at suit of the stockholders.

2. SAME—AMENDMENT OF CHARTER—RESERVED POWER OF LEGISLATURE.
Under power reserved to a Legislature to amend, annul, or repeal the charter of a corporation, it may make any alteration or amendment which will not defeat or substantially impair the object of the grant or any rights vested under it.

3. SAME.
While a reservation to the Legislature, in the charter of a corporation, of the power to annul or repeal such charter, cannot be used to take away property of the corporation, the action of the Legislature in consolidating a corporation with others organized for different purposes, and requiring it to assume their liabilities, is not invalid under such rule, but is within the reserved power, where, by the charters of such other corporations, they have always been under the sole management and control of its own board of trustees; the consolidation in such case being only a legislative recognition of the existing relations between them.

4. SAME.
The alteration or amendment of the charter of a corporation by the Legislature, within power reserved by the grant, does not require submission to the stockholders for their acceptance.

Appeal from the Circuit Court of the United States for the Western District of New York.

For opinion below, see 124 Fed. 808.

S. Schoyer, Jr., for appellant.

John G. Milburn, for appellees.

Before WALLACE, LACOMBE, and TOWNSEND, Circuit Judges.

WALLACE, Circuit Judge. The decree appealed from sustained a demurrer to the bill of complaint, and dismissed the bill. The action was brought by the complainant, as a member of Chautauqua Assembly, a corporation formed under the provisions of chapter 319, p. 447, of the Laws of New York of 1848, authorizing the organization of corporations for benevolent, charitable, scientific, and missionary purposes. Among other things, the bill prays relief as follows:

"That the merger and consolidation with said Chautauqua Assembly of the Chautauqua University and of the Chautauqua School of Theology, together with the assumption of all debts and liabilities of each of the said merged institutions by said Chautauqua Assembly, be declared null and void, and the said Chautauqua Assembly be enjoined and restrained from assuming any of the debts and liabilities of either of the same, or of making the work of the same, or of either, an integral part of said Chautauqua Assembly."

Digitized by Google

It appears by the bill that the objects of Chautauqua Assembly, as stated in its articles of association, were "to hold stated public meetings from year to year, at Fairpoint in the County of Chautauqua, State of New York, for the promotion of Sunday School interests, and any other moral and religious purposes not inconsistent therewith"; that since its organization it has acquired some 186 acres of land; that its membership consists of about 600 persons, including all persons having a lease of one or more of the lots upon such lands; and that the complainant, as one of such members, has erected upon his lot a cottage for a summer residence, and is entitled to all the rights and privileges which appertain to membership. The bill further sets forth that sundry grievances on the part of the members resulted in the appointment of a committee of three of their number to lay their complaints before the board of trustees; that a conference resulted between that committee and a committee of the board of trustees; and that, pending the adjustment of such differences, the board of trustees secured the passage by the Legislature of New York on March 21, 1902, of an act intended to defeat the claims of complaining members. Laws 1902, p. 496, c. 196. The act thus mentioned is entitled "An act to change the name, define the corporate objects and purposes, regulate the powers and government of the corporation Chautauqua Assembly, and to consolidate with said Chautauqua Assembly the Chautauqua University and the Chautauqua School of Theology." It changes the name of the corporation from "Chautauqua Assembly" to "Chautauqua Institution," and, among other provisions, contains the following:

"Sec. 2. The purpose and object of said corporation shall be to promote the intellectual, social, physical, moral and religious welfare of the people. To this end it may hold meetings and provide for recreation, instruction, health and comfort on its grounds at Chautauqua; conduct schools and classes; maintain libraries, museums, reading and study clubs and other agencies for home education; publish books and serials, and do such other things as are needful or proper to further its general purposes.

"Sec. 3. All debts and liabilities and all papers, records and other property (including the right to receive any gift, devise or bequest now or hereafter made) of Chautauqua University, a corporation chartered by chapter one hundred and forty-eight of the Laws of eighteen hundred and eighty-three, and of the Chautauqua School of Theology, a corporation chartered by chapter sixty-three of the Laws of eighteen hundred and eighty-one, both of which corporations are by chapters three hundred and eighty-seven and three hundred and eighty-eight, Laws of eighteen hundred and eighty-five, now under the sole control of the same trustees as said corporation Chautauqua Assembly, are hereby transferred to the corporation Chautauqua Institution, and the existence of the said Chautauqua University and the Chautauqua School of Theology as separate institutions is hereby terminated and their work is made an integral part of the work of Chautauqua Institution."

"Sec. 5. The government and control of said corporation shall be vested as heretofore in twenty-four trustees. The persons now acting as trustees shall be trustees for the terms for which they are respectively chosen * * * and until their successors are elected; those whose terms have expired shall be trustees until their successors are elected. The trustees shall be divided into Class A, consisting of twenty trustees who shall be elected by the trustees, and Class B, consisting of four trustees who shall be elected by the members of the corporation. The term of office shall be four years. Five of Class A and one of Class B shall be elected each year after 1902."

Digitized by Google

"Sec. 9. The trustees may by vote of two-thirds of their entire number alter or repeal the by-laws or enact new ones. * * * The sole power to enact, alter or repeal the by-laws shall be in the trustees. * * *"

The bill alleges that the board of trustees assumed authority to accept the provisions of the act of 1902, and, although the act has never been accepted by the members of the corporation, the trustees have proceeded, under color of said act, to use the amended name of "Chautauqua Institution," and have taken over and assumed the debts and liabilities of Chautauqua University and of the Chautauqua School of Theology, and have been and are carrying on the business of the said institutions as a part of the corporate business of said Chautauqua Institution, without any authority or assent from the members of Chautauqua Assembly, although the purposes and objects of each are entirely dissimilar from those of Chautauqua Assembly and from each other; that the purposes and objects of the Chautauqua School of Theology, as prescribed in the law of its organization, include the instruction of its patrons in historical and philosophical learning, and the departments which are usually taught in seminaries devoted to the training of candidates for the clerical profession, and also to provide an archæological library and museum, and a collection of books, manuscripts, charts, etc.; that the leading objects of Chautauqua University, as prescribed in the law of its organization, are to promote liberal and practical education, especially among the masses of the people, to teach the sciences, arts, languages, and literature, and give instructions embracing all departments of culture which the board of trustees may deem useful and proper, with power to grant diplomas and confer the usual university degrees; that, in carrying out the purposes of these two corporations, large expenses are incurrable for the services of instructors, teachers, lecturers, printing, etc.; that the assembly is without capital to prosecute the business of its department of theology or its university; that since the merger and consolidation of the corporations the Chautauqua Assembly has incurred large expenses for the support and maintenance of the business comprehended within the purposes of the other two corporations; that the continued support and maintenance thereof will be productive of great losses, and will threaten the continued existence of the corporation, and deprive the members of the benefits, privileges, and advantages resulting from membership therein, and will result in a serious depreciation of the property of lot-holding members of the corporation.

It is unnecessary to recapitulate the various averments of the bill which set forth the grievances complained of in the previous management of the corporation, or the prayers for relief founded upon them, and we have not referred to them in detail, because, unless the act of 1902 is unconstitutional, that act precludes the complainant from obtaining any relief in respect to those transactions. It is proper to say, however, that the averments in respect to the actions of the trustees in purchasing the capital stock of the "Chautauqua Press," in incurring indebtedness, and in creating a mortgage upon the property of the corporation, fail to show that the trustees trans-

Digitized by Google

cended their powers. The control and management of its affairs and funds were lodged by law with the trustees. They were expressly authorized to mortgage the property of the corporation upon obtaining the concurring vote of two-thirds of their members. Laws N. Y. 1895, p. 336, c. 559, § 13. The purchase of the stock of the Chautauqua Press was authorized. Laws N. Y. 1899, p. 326, c. 172. It is to be presumed, in the absence of any averment that two-thirds of the trustees did not concur, that the mortgage was properly created. In exercising the delegated power of managing its concerns for the common benefit of all the members of the corporation, the trustees were subject to the control of the membership, through its power to supersede them at recurring elections; and, if the trustees improvidently managed its affairs by incurring debts or otherwise, the remedy of the members was thus to supersede them. As to all matters of management and control within the scope of their powers, the affairs of the corporation were committed to their judgment and discretion, and the courts cannot sit in review of their errors.

Neither do we deem it necessary to discuss the contentions for the complainant that the act of 1902 contravenes the prohibitions of sections 16 and 18 of article 3 of the state Constitution, as it is entirely clear that these contentions are without merit. The real questions are whether the act is constitutional upon other considerations, and whether, if constitutional in part, some of its provisions are not nugatory without the consent of the corporation.

The power of the Legislature to amend, annul, or repeal the charter or articles of association of the corporation was originally reserved by section 10, c. 319, p. 449, of the Laws of 1848, and was preserved when that chapter was remodeled by chapter 563, p. 1065, of the Laws of 1890. That power confers exceedingly wide discretion upon the Legislature, but it is not without limits. Diverse views as to its scope have been entertained by the tribunals of different jurisdictions, some of which treat it as authorizing much less radical changes than do others; but the authorities which should be regarded as controlling upon this court are the decisions of the highest courts of New York and of the Supreme Court of the United States. The decisions of these tribunals are practically in accord, and sanction the doctrine that the reserved power authorizes the Legislature to make any alteration or amendment of a charter which will not defeat or substantially impair the object of the grant, or any rights vested under it, and which the Legislature may deem necessary to promote the original purpose contemplated by its charter or articles of association, or to protect the rights of the public. In The Mayor v. Twenty-Third Street Railroad Co., 113 N. Y. 317, 21 N. E. 60, the Court of Appeals used this language:

"It is difficult to put precise limits upon the power of the Legislature thus reserved over corporations created by it under its authority. Under its reserved power it cannot deprive a corporation of its property, or interfere with or annul its contracts with third persons; but it may take away its franchise to be a corporation, and may regulate the exercise of its corporate powers. * * * It may enlarge or limit its powers, and it may increase or limit its burdens. It is sometimes said that the alteration under such reserve power must, however, be reasonable, and it must always be legislative in its char-

Digitized by Google

acter, and consistent with the scope and object of the corporation as it was originally constituted."

The Supreme Court of the United States in Schurz v. Cook, 148 U. S. 411, 13 Sup. Ct. 645, 37 L. Ed. 498, quoted from this decision, and added:

"This construction of the statutes of the state by its highest court is of controlling authority."

In Looker v. Maynard, 179 U. S. 46, 21 Sup. Ct. 21, 45 L. Ed. 79, the Supreme Court used this language:

"The effect of such a provision, whether contained in an original act of incorporation, or in a constitutional or general law subject to which a charter is accepted, is, at the least, to reserve to the Legislature the power to make any alteration or amendment of a charter subject to it which will not defeat or substantially impair the object of the grant, or any right vested under the grant, and which the Legislature may deem necessary to carry into effect the purpose of the grant, or to protect the rights of the public or of the corporation, its stockholders or creditors, or to promote the administration of its affairs."

Further citations of authority are unnecessary, and the validity of the act of 1902 is to be tested by the general principles announced in these decisions.

The changes introduced by section 2 (Laws 1902, p. 496, c. 196) are consistent with the original object of the corporation, and merely enumerate more specifically the "other moral and religious purposes" which by the articles of association were declared to be within the contemplation of the incorporators. The changes made by sections 5 and 9 in the mode of the selection of the trustees, in their tenure of office, and by investing in them exclusively the power of enacting by-laws, were clearly within the competency of the Legislature. Changes fully as radical as these in the mode of constituting the government of a corporation were upheld as within the reserved power of the Legislature in Miller v. The State, 15 Wall. 478, 21 L. Ed. 98, and Close v. Glenwood Cemetery, 107 U. S. 466, 2 Sup. Ct. 267, 27 L. Ed. 408. The changes of more doubtful validity are those made by section 3. The provisions of this section not only merge the corporation with two others, and thus embark it in new enterprises, but they compel it to assume the debts and liabilities of the corporations. Thus apparently these provisions appropriate the funds of the corporation, and divert them from its own treasury, to the extent necessary to pay the outstanding liabilities and carry on the operations of the other two corporations. If it were really the effect of these provisions to compel the corporation to embark its money improperly in one or more unrelated and independent concerns, the legislation would seem to be an unwarranted exercise of the power of alteration or amendment. As was said by Chief Justice Waite:

"All agree that it cannot be used to take away property already acquired under the operation of the charter, or to deprive the corporation of any funds actually reduced to possession under contracts lawfully made." Sinking Fund Cases, 99 U. S. 720, 25 L. Ed. 496.

It appears, however, that for several years previous to the passage of the act the three corporations had been practically one, and the

Digitized by Google

power of management had been submitted to Chautauqua Assembly. By chapters 387 and 388, pp. 631, 632, of the Laws of New York of 1885, the control and management of the property and affairs of Chautauqua University, and of the Chautauqua School of Theology, were vested in the board of trustees from time to time existing of the Chautauqua Assembly. Thus the members of Chautauqua Assembly, through the trustees selected from time to time, were in control of the other two corporations. Presumably the membership of the three corporations was composed of the same persons, but, however the fact may have been, it is not material; it suffices that no person had a voice in the control of the two corporations except the members of Chautauqua Assembly. In view of this relation between the three corporations, the validity of the legislation is not fairly open to question. The provisions of section 3 were merely a legislative recognition and approval of the existing relations between them. Concluding, as we do, that the act of 1902 was in all respects a constitutional exercise of the power of the Legislature to alter the organic law of Chautauqua Assembly, it is of no consequence that the trustees did not, by a corporate meeting or otherwise, obtain the assent to the changes of the members of Chautauqua Assembly. Such changes were sanctioned by the members in advance. Every member who enters into such an association is aware of the reservation of the power of the Legislature and of the possibility of its exercise, and must trust to the wisdom and justice of the Legislature that the power will not be abused; and those who become members contract subject to the reservation of power, and the courts are bound to read their agreement with the legislative condition. Schenectady & Saratoga Plank Road Co. v. Thatcher, 11 N. Y. 102, 114.

We have not adverted to the charges in the bill which in substance aver that the trustees have arrogated to themselves municipal functions and established police and health regulations over the territory included within the lands of the corporation. It does not appear from the bill that any specific wrong or injury to the complainant has resulted from these acts.

We find nothing in the bill which entitled the complainant to equitable relief, and are of the opinion that the court below properly dismissed the bill.

The decree is affirmed, with costs.

Digitized by Google

(130 Fed. 694.)

HOFFMAN v. WILSON.

(Circuit Court of Appeals, Third Circuit. May 27, 1904.)

No. 15.

1. TROVER—RIGHT TO MAINTAIN—CORRELATIVE DUTIES.

Plaintiff was evicted from a house occupied by her as a boarding house under a judgment for possession recovered by defendant, who took possession of her furniture therein. From certain of the bedrooms she had removed furniture owned by defendant and substituted her own. *Held*, that she could not maintain trover for any part of her own furniture until she had returned or offered to return that owned by defendant.

Acheson, Circuit Judge, concurs so far as relates to the articles substituted for those of defendant, but dissents as to the remainder.

In Error to the Circuit Court of the United States for the District of New Jersey.

For opinion below, see 123 Fed. 984.

C. L. Cole, for plaintiff in error.

Geo. J. Bergen, for defendant in error.

Before ACHESON, DALLAS, and GRAY, Circuit Judges.

DALLAS, Circuit Judge. This writ of error has brought up the record in an action of tort in which Effie C. Wilson was plaintiff and Samuel D. Hoffman and Francis A. Canfield were defendants. The plaintiff declared in trespass, and also, by separate count, in trover. It appeared, however, that the charge of trespass could not be sustained, and that a joint conversion by the two defendants could not be established. Hence the case was properly tried as one of trover merely, and as against Samuel D. Hoffman only. The chattels alleged to have been converted consisted of household goods, which were contained in a house in Atlantic City, N. J., known as "Hawthorne Inn." The plaintiff below had been put in possession of this house by a certain Mrs. Hartley under an agreement between them, the particulars of which are unimportant. An action of ejectment for its possession was then pending by Hoffman against Mrs. Hartley, in which Hoffman subsequently obtained judgment, and upon execution on that judgment Effie C. Wilson was evicted. Prior thereto she had removed five suites of Hoffman's bedroom furniture from the house, and had put other furniture in their place; and for the latter, although she had not restored the former, she was allowed to recover. But, in our opinion, these facts were, as to the whole case, conclusive against her. Trover will not lie for anything which the plaintiff has not the immediate right to possess, and one who has not only voluntarily placed her goods upon the land of another, but has also taken therefrom goods of the landowner, has no right to reclaim her own without returning his. The question is not as to whether one trespass or conversion may be set off against another. It may be conceded that this cannot be done; but the law of torts deals with duties and rights as correlates, and to us it seems clear that the return of the defendant's goods was a duty which the plaintiff was bound to dis-

Digitized by Google

charge before she could lawfully demand those which belonged to herself. In Kimball v. Cunningham, 4 Mass. 502, 3 Am. Dec. 230, it was said that where an exchange of chattels has been made in execution of a contract voidable for fraud, the innocent party to it cannot maintain trover for anything delivered by him while he still retains any part of the consideration he received; "for he shall not compel even the fraudulent seller to an action to recover back the property he has parted with in the exchange." We adopt this statement of the law. It was pertinent to the case in which it was made, and, a fortiori, it is applicable to this one, for the defendant below had not consented to part with anything, and had perpetrated no fraud. His goods were taken by the plaintiff without his knowledge, and no wrong whatever was committed by him. This, it is true, gave him no right to keep what belonged to her, but the duty to relinquish what could not lawfully be retained was reciprocal, and therefore the fulfillment of that duty upon her part was essential to the existence of the right, necessarily asserted by her, to immediately possess the chattels of which she alleged she was wrongfully deprived. The situation presented is simply this: The defendant in error, during her occupancy of the locus in quo under a claim of title which the judgment in ejectment determined to be invalid, took therefrom goods of the owner of the premises and placed goods of her own thereon. This proceeding cannot be otherwise regarded than as one continuous and indivisible transaction, and therefore we are of opinion not only that she was debarred from recovery with respect to the furniture which she may have intended—but without Hoffman's assent—to specifically substitute for the furniture she removed, but that the return of the latter was requisite to the maintenance of trover for any part of the chattels to which the action related.

The second specification avers that the Circuit Court erred in overruling the motion of the defendant below for binding instructions in his favor, and, as the views we have expressed sustain that specification, they completely dispose of the case, and no other of the errors assigned need be considered.

The judgment is reversed.

ACHESON, Circuit Judge (concurring in part, but dissenting in part). I concur in the view that as to the five suites of bedroom furniture the plaintiff below was not entitled to recover. Having taken away the defendant's five suites of bedroom furniture, and substituted therefor five other bedroom suites of her own, Miss Wilson (the plaintiff) is to be held to have sanctioned the use by Hoffman (the defendant) of the substituted suites of furniture until she returned his suites, or at least offered to return them. Not having done this, the plaintiff was in no position to demand possession of the bedroom suites. Therefore quoad hoc a defense was shown. But I am not able to see by what rule of law or upon what just principle the defendant could retain the other separate and distinct personal property belonging to the plaintiff against her demand merely because of her action in respect to the bedroom fur-

Digitized by Google

niture. Except that the five bedroom suites of furniture and the plaintiff's other goods were upon the Hawthorn Inn premises, there was no connection whatever between the two sets of chattels. They differed in kind, use, particular location, and value. The case cited by my learned associates to sustain their conclusion (Kimball v. Cunningham, 4 Mass. 502, 3 Am. Dec. 230) arose out of a contract for the exchange of chattels. There the plaintiff's action rested upon his right to rescind the contract for fraud. He failed in his action because he had retained part of the consideration he had received in the exchange. The court held that, if he elected to rescind, he must disaffirm the whole contract, returning the entire consideration he had received. I submit that the principle of the case is not applicable here, and that nothing the court there said is pertinent to the facts of the present case.

I am for reversing the judgment of the court below not only upon the assignment respecting the bedroom suites, but also upon other assignments touching the admission of evidence and the instructions as to what constituted conversion, but I would reverse, with the award of a venire facias de novo.

(130 Fed. 696.)

UNITED STATES v. WITHERS et al.

(Circuit Court of Appeals, Second Circuit. April 27, 1904.)

No. 173.

1. CONTRACTS—BREACH—DUTY TO PREVENT LOSS.

A bidder for furnishing supplies to the Post-Office Department, who, on the acceptance of his bid, failed to execute the contract in accordance with his guaranty, cannot be held liable for the difference between the contract price of certain articles and the price paid by the department to the public printer for such articles three months after the default, where it is shown that at the time of such default and for several weeks thereafter the articles could have been purchased in the market for less than the contract price, and especially where it does not appear that the price subsequently paid was the market price, which alone could fix the measure of damages.

2. ERROR—GROUNDS FOR REVERSAL—RIGHT TO NOMINAL DAMAGES.

A judgment for defendant entered on a verdict directed by the court will not be reversed because plaintiff may have been entitled to nominal damages, where no permanent right is affected.

In Error to the Circuit Court of the United States for the Southern District of New York.

This cause comes here upon appeal from a judgment of the Circuit Court, Southern District of New York, in favor of the defendants in error (who were defendants below), entered upon a verdict in their favor which was directed by the court.

Arthur M. King, for plaintiff in error.

Charles F. McCandeles, for defendants in error.

Before LACOMBE, TOWNSEND, and COXE, Circuit Judges.

LACOMBE, Circuit Judge. The defendant Withers made a bid offering to enter into a contract to furnish certain stationery sup-

Digitized by Google

plies for the Post-Office Department at prices named in the said bid. The only item as to which testimony was taken is "7,500 doz. scratch blocks or pads at $15^1/_2$ cents." Withers and his codefendants, Morse and St. John, guarantied that if his bid were accepted he would within 10 days enter into and duly execute a contract to furnish such supplies at the prices named, and that, in case of failure to enter into such contract, the bidder and his guarantors would forfeit and pay to the United States the sum of $3,000. The bid was accepted somewhere about the latter part of June, 1900, and Withers was notified of such acceptance, and was requested to fill out the contract and send it back, so that it might be accepted and filed. He failed to do so, although repeatedly requested to execute it, and by the middle of July (the record does not give the exact date of notification to sign contract) the 10 days had expired, Withers was in default, and the government officers were entitled to advertise for new bids and enter into a new contract for the supplies in question. No steps were taken to effect a new contract in the usual way, and finally, about the 1st of October, the supply of pads was exhausted, and the post offices throughout the country had to be supplied. Thereupon the Post-Office Department ordered $3,333^1/_3$ dozen pads from the public printer at $30^{816}/_{1000}$ cents per dozen. This action was brought to recover the difference of price paid from the failing bidder and his guarantors.

The United States attorney quite properly decided that recovery could not be had for the penalty named ($3,000), but only for the actual damages which had been sustained through defendants' default. The price paid the public printer was $1,027.20, the articles at prices named in the bid would have cost $516.67, and the government sought to recover as actual damages $510.53. It appeared on the trial that the pads bought from the public printer were of slightly better quality than those which Withers had offered to furnish, and that $85 fairly represented such difference in quality, whereupon the United States attorney apparently conceded that the plaintiff's claim should be reduced by that sum. It further appeared that the market price of pads such as Withers offered to furnish was 14 cents in July and August. What the market price was subsequently does not appear.

The plaintiff relies on a section of the United States Revised Statutes which reads as follows:

"Sec. 3709. All purchases and contracts for supplies or services, in any of the departments of the government, except for personal services, shall be made by advertising a sufficient time previously for proposals respecting the same, when the public exigencies do not require the immediate delivery of the articles, or performance of the service. When immediate delivery or performance is required by the public exigency, the articles or services required may be procured by open purchase or contract, at the places and in the manner in which such articles are usually bought and sold, or such services engaged, between individuals." [U. S. Comp. St. 1901, p. 2484.]

Incidentally it may be noted that articles of stationery are not usually bought "between individuals" of the public printer, and whether the price of articles sold by him compare favorably or unfavorably with their prices in the open market, where individuals

Digitized by Google

purchase, does not appear. However this may be, the case seems to be determined by the application of the familiar principle that there can be no recovery for damages which might have been prevented by reasonable efforts on the part of the person injured. The defendants were in default in July; with reasonable diligence the Post-Office Department could have readvertised and secured a new bidder in August; even if it had not advertised, it could have obtained the pads by purchase in the open market during that month at a sum less than that at which Withers had agreed to furnish them. The most ordinary diligence to avoid disastrous results from the breach of contract would have prevented any loss at all. Moreover, since the record failed to show at what price the pads could have been bought in the open market in October, when at last they were bought there was nothing upon which the jury could have assessed any substantial damages, for the measure of damage was the difference between the contract price and the market price.

It is contended that plaintiff was at any rate entitled to recover nominal damages, and that the court erred in directing a verdict for defendants. But it is well settled that there should be no reversal when a nonsuit has been directed in a case where plaintiff could recover nominal damages only, unless some permanent right is affected, or some error of the court has crept in by which the jury has rendered an erroneous verdict, or, possibly, the recovery of costs has been affected. Ellsler v. Brooks, 54 N. Y. Super. Ct. 73; Funk v. Evening Post Pub. Co., 76 Hun, 497, 27 N. Y. Supp. 1080; Brantingham v. Fay, 1 Johns. Cas. 264. In the case at bar no permanent right is affected, the jury has not been misled, no costs would have followed the recovery of nominal damages, and none were entered against the United States in the judgment under review.

The judgment is affirmed.

Digitized by Google

(130 Fed. 641.)

ALLEN et al. v. FIELD.

(Circuit Court of Appeals, Second Circuit. April 21, 1904.)

No. 109.

1. CONTRACTS—ACTION FOR BREACH—EFFECT OF ASSIGNMENT.

Defendants contracted for the purchase of the greater part of the product of plaintiff's distillery for 15 seasons, to be delivered in bond at a stipulated price per gallon. The practical construction placed upon the contract by both parties was that it was not assignable by either party without the consent of the other. Defendants having made an assignment, plaintiff refused to accept the assignee as a substitute, except with the understanding that defendants would still be bound, while defendants insisted on such acceptance. Plaintiff subsequently agreed to, and did, deliver to the assignee, as requested by defendants, but with a statement to them that he did not waive his right to hold them if the assignee should make default. The contract was treated as in force by both parties for several months thereafter, and until both the assignee and defendants refused to accept further deliveries or to pay therefor. *Held*, on the evidence, that there had been no breach by plaintiff which justified such refusal, and that plaintiff was entitled to recover damages from defendants for their breach.

2. SAME—BREACH—MEASURE OF DAMAGES.

On the repudiation of such contract by defendants without legal right, after it had been in effect for one or two seasons, plaintiff was not bound to continue to operate his distillery during the remainder of the term and to market the product, for the purpose, if possible, of reducing the damages resulting to him from defendants' breach, but was entitled to sue for the breach at once, the measure of his damages being the difference between the contract price and the cost of manufacture.

3. SAME—EVIDENCE OF COST OF PERFORMANCE.

Evidence of the average cost of manufacturing and the average price of the grain used during a series of years was competent as furnishing a basis on which the jury might estimate the probable cost during the remainder of the term.

4. SAME—CONSTRUCTION—DAMAGES RECOVERABLE FOR BREACH.

A contract by which plaintiff agreed to manufacture for defendants, and defendants to buy, stated quantities of whiskey, not less than 3,000 barrels each season, for a term of 15 years, at a stipulated price per gallon, provided that, if the price of corn in the Chicago market should be more than 45 cents per bushel on the first Tuesday in October in any year, plaintiff should not be obligated to manufacture during that season, but that, if he should manufacture to exceed 500 barrels, defendants should have the right, at their option, to demand the usual quantity and up to 5,000 barrels at the agreed price. *Held*, that such provision did not render the contract unilateral, but was one for the mutual protection of the parties in a contingency which might arise, and the fact that it became operative in one season, after defendants had refused to further perform, did not affect plaintiff's right to recover damages on account of the breach for subsequent seasons, and that the effect of such provision on the amount of damages which would result to plaintiff from the breach during the remainder of the term was properly left to the determination of the jury.

5. SAME—DAMAGES RECOVERABLE FOR BREACH—SALE OF PRODUCT TO BE MANUFACTURED.

Where plaintiff, who was the owner of a distillery, on the refusal of defendants to further perform a contract by which they agreed to take and pay for the entire product of his distillery for a term of years, except-

---

¶ 5. Contracts for sale of things to be produced or manufactured, see note to Star Brewery Co. v. Horst, 58 C. C. A. 363.

Digitized by Google

ing a certain number of barrels each year, brought suit for breach of the contract, to recover as damages the profit he would have made during the remainder of the term, defendants were entitled to show that plaintiff continued to operate his distillery after the breach, and the profits he actually made thereby up to the time of trial, and to have the same set off against his estimated profits under the contract.

6. SAME—EXPERT TESTIMONY.

In such case defendants were also entitled to a reasonable deduction for the less time engaged and the release from the trouble, risk, and responsibility attending the full execution of the contract, and upon the question as to the amount of such deduction the testimony of experts familiar with the business in the locality where plaintiffs' distillery was situated was admissible, if properly limited to the particular matters as to which the witnesses had experience.

7. SAME.

The contract containing a provision that the whiskey was to be delivered to defendants in plaintiff's warehouse, and that storage should be paid thereon at a stipulated price per month until it was withdrawn, and it being shown that whiskey was customarily left in the warehouse for some years, and that there was a profit in its storage, plaintiff was entitled to recover damages on account of the loss of storage, which was an item presumably taken into consideration by the parties when the contract was made.

In Error to the Circuit Court of the United States for the Southern District of New York.

This cause is brought here by writ of error from a judgment of the United States Circuit Court for the Southern District of New York, entered upon a verdict by the jury in favor of plaintiff for $50,000 damages for breach of contract. The plaintiff in the court below has died since the commencement of the action, and his estate is represented on this appeal by his executors.

Levy Mayer, for plaintiffs in error.
William Lindsay, for defendant in error.

Before LACOMBE, TOWNSEND, and COXE, Circuit Judges.

TOWNSEND, Circuit Judge. Prior to the commencement of this action, plaintiff was a distiller of whiskey in Kentucky. The defendants are wholesale dealers in whiskey at New York. The negotiations between the parties herein appear from the record to have been opened by a letter from defendants to plaintiff, stating that, as they had sold their Louisville distilleries to the Kentucky Distilleries & Warehouse Company, and must have goods to substitute for those whiskeys, which they no longer handled, if they could make some arrangement with him to control the output of his house, under an arrangement extending over a term of years, and providing for the restriction of the production within what they would consider proper limits, and at a price which would make it an object for them to go into such a transaction, the matter might be considered. On April 12, 1899, the parties entered into a written contract whereby plaintiff undertook to manufacture and deliver to defendants certain quantities of whiskey, under certain conditions, for 15 distilling seasons. The material portions of said agreement are as follows:

Digitized by Google

"First: * * * This agreement, and all of its parts and provisions, shall run in favor of and be obligatory upon each of the parties hereto and their respective successors, legal representatives and assigns.

"Second: The term 'distilling season,' as hereinafter used, shall be held to mean the period of time between October 1st of one year and June 1st of the following year, and this contract shall continue to be in full force and effect for and during a period of fifteen (15) distilling seasons, the first of said fifteen (15) distilling seasons beginning on or after October 1st, 1899.

"Third: The second party [plaintiff] hereby agrees to manufacture for and sell and deliver to the first party [defendants], and the first party hereby agrees to purchase from the second party three thousand (3,000) barrels of whiskey during each of said five (5) consecutive distilling seasons, the first of said seasons to begin on or after October 1st, 1899, but the first party shall have and is hereby given the exclusive right and option to purchase from the second party, and in that event the second party shall manufacture and sell and deliver to the first party not to exceed five thousand (5,000) barrels of whiskey during one or more of said five (5) distilling seasons.

"Fourth: The second party hereby agrees to manufacture for and sell and deliver to the first party, and the first party hereby agrees to purchase from the second party three thousand five hundred (3,500) barrels of whiskey during each of the remaining ten (10) distilling seasons, the first of said seasons to begin on or after October 1st, 1904, but the first party shall have and is hereby given the exclusive right and option to purchase from the second party, and in that event the second party shall manufacture and sell and deliver to the first party not to exceed five thousand (5,000) barrels of whiskey during any one or more of said remaining ten (10) distilling seasons.

"Fifth: The price at which during each and all of said distilling seasons the second party hereby agrees to manufacture, sell and deliver and the first party hereby agrees to purchase said whiskey shall be and is hereby fixed at Thirty (30) cents per proof gallon in bond, original gauges, provided the bona fide market price of cash corn be not more than forty-five cents per bushel, Chicago Board of Trade, on the first Tuesday in October, in such respective distilling seasons. If, on the other hand, said market price is, on the date and place aforesaid, in any such respective distilling seasons, more than forty-five (45) cents per bushel, the second party shall not be obligated to manufacture, sell and deliver to the first party hereunder any whiskey during such distilling season, but if the second party shall, during such distilling season, manufacture whiskey in excess of five hundred (500) barrels, then the second party shall be obligated to manufacture, sell and deliver to the first party during such distilling season at the price of thirty (30) cents per proof gallon the aforesaid respective amount of whiskey during such distilling season, up to five thousand (5,000) barrels of whiskey at the option of the first party as aforesaid. Said whiskey shall be paid for upon the delivery of warehouse receipts, on or after the first day of the month, succeeding the month of its entry into bond.

"Sixth: During any of said distilling seasons the second party shall have the right to manufacture for the use of the second party not to exceed five hundred (500) barrels of whiskey during any of said distilling seasons in excess of the respective quantities hereinbefore specified, and if the second party shall manufacture more than five hundred (500) barrels of whiskey during any of said distilling seasons in excess of the respective quantities hereinbefore specified, then and in that event, for every barrel of whiskey so manufactured in excess by the second party, the second party shall and hereby agrees to pay the first party Five Dollars ($5). It is expressly understood and agreed, however, that no part or parcel of said five hundred (500) barrels of whiskey which the second party is hereby permitted to manufacture for his own use during any of said distilling seasons shall be directly or indirectly sold or disposed of by the second party to any distillery or wholesale liquor dealer in the United States. * * *

"Ninth: The second party further agrees that for all the whiskeys agreed by him to be manufactured for and sold to the first party hereunder, the second party will issue to the first party the second party's usual and regular warehouse receipts in five (5) barrel certificates, * * * and that the rate of

Digitized by Google

storage for said whiskey shall be five (5) cents per barrel per month, from the date of the warehouse receipts. * * *

"Eleventh: It is further expressly understood and agreed that for the purpose of enabling the first party to ascertain and determine whether the second party has complied with the terms and conditions hereof, the first party shall have and is hereby given the right and privilege at any time to examine and inspect any and all of the internal revenue books which are or shall be kept by the second party in the operation of the second party's distillery.

"Twelfth: It is further expressly understood and agreed that all of the whiskey which the second party has hereby agreed to manufacture for and sell to the first party shall be manufactured by the second party in the distillery plant now owned by the second party and known as J. W. M. Field Distillery, near Owensboro, Daviess County, Kentucky, or in such other distillery as in case of fire or accident may by the second party be erected or constructed or procured in lieu of it as a substitute for the distillery plant so as aforesaid now owned by the second party. * * *

"It is expressly understood and agreed that during the term of this contract, the second party shall not and will not, directly or indirectly, manufacture or sell or deliver any whiskey except as hereinbefore otherwise provided, except that he may sell as much whiskey, of the manufacture of others, as he sees proper."

The defendants, in making this agreement, were acting on behalf of the Kentucky Distilleries & Warehouse Company, known as the "Whiskey Trust," but this fact was not communicated to the plaintiff. The circumstances leading up to the rescission of the contract and the controversies in relation thereto appear from the correspondence between the parties. Shortly after the execution of the agreement, plaintiff wrote defendants, stating that he purposed to incorporate his distillery, and that he would like to convey said contract to the new corporation, stating that it would be essential, of course, that the defendants should consent to the transfer. The defendants assented to said arrangement, and a proposed agreement was forwarded by plaintiff to defendants, which provided that the defendants should carry out the contract with the new corporation, and that the plaintiff should be bound to the fulfillment of said contract by said corporation. Upon receipt of said contract the defendants replied as follows:

"October 28, 1899.

"Field: Our counsel will draw a contract embodying the assent to your transfer to the company. In such contract we will also specify 'that the assent is given by the Kentucky Distilleries & Warehouse Company, to whom the contract of April 12, 1899, above referred to has heretofore been assigned by Paris, Allen & Co.'"

And plaintiff's reply was as follows:

"Would suggest that P., A. & Co. guarantee the faithful performance of Kentucky Company obligations, same as I guarantee for J. W. M. Field, Incorporated."

Shortly afterwards the Kentucky Company forwarded to plaintiff a contract signed by it, which provided that the plaintiff should be bound for the performance of the contract by the Field corporation, but made no provision that the defendants should guaranty the fulfillment of the contract by the Kentucky Company. Plaintiff demurred to this, and on November 20, 1899, wrote that, so long as the defendants had gotten out of the contract, he expected them to guaranty the fulfillment of the contract by the Kentucky Company. To this letter defendants made no reply. On December 2, 1899, the Kentucky Company wrote to plain-

Digitized by Google

tiff requesting him, as it had assumed the contract between him and defendants, to invoice the whiskey to said company, and make drafts on it for amounts due, and attach drafts in accordance with the original contract. The plaintiff made no reply to this letter, and sent the whiskey and drafts to the defendants. Defendants objected to this course, and requested plaintiff thereafter to make drafts to the company, as the contracts had been turned over to it, and it had assumed the same. On December 28, 1899, the plaintiff wrote the following letter:

"Your favor of the 14th inst. received. As my contract is with you, I do not want to have any dealings in connection with the Kentucky Distilleries & Warehouse Co., but if you direct me I will make drafts on that company as suggested in your letter, on condition that by doing so I am not to be considered as in any way releasing you from the contract between you and me, and am willing to make drafts on that company instead of you, simply as a matter of convenience to you and for your accommodation. I will continue to charge the whiskey to you each month and whenever that company fails to pay any draft I will immediately draw on you. If this proposition meets with your approval advise me and I will make the drafts as you direct. You will remember that I wanted to transfer the contract to a corporation formed by my sons and myself to operate the distillery and you said that arrangement would suit you provided I would guarantee that the corporation would perform the contract, and I told you I would. After that and before we accomplished anything you suggested you had transferred the contract to the Distilling Co., and I wrote you that I was willing provided you would guarantee that that corporation should carry out the contract with my corporation, as I had agreed to guarantee for mine, but you have never answered my letter on that subject, and I should be glad if you would do so, as the change should be made if we are to make it at all."

To this letter defendants made no reply, and the next shipment of whiskey was made to the defendants, who paid the same, but they wrote the plaintiff stating that, as their interest in the contract had been transferred to the Kentucky Company, they would not honor any further drafts. On January 13, 1900, plaintiff wrote defendants, repeating his claim that he did not propose to accept the Kentucky Company in lieu of defendants, unless the defendants would guaranty the performance of the contract, and on January 18, 1900, wrote the defendants as follows:

"I will have about 700 barrels of January whiskey in a few days, and if you want it made so as to turn over to Kentucky Company I will do so by your saying you want me to do so and it shall in no way prejudice or in any way invalidate our contract, and that you will agree if not protected by the Kentucky Company, all drafts in fulfillment of our contract in full your firm will carry it out to the letter. Then I will draw drafts and make receipts to them. * * *"

Thereafter the parties, by letter and telegrams, continued to dispute about the question of the assignability of the contract and guaranty of performance by defendants, the defendants stating, inter alia, that the Kentucky Company was complaining of the nonfulfillment of the contract, and plaintiff stating that he would continue to forward the whiskey to the defendants. On March 28, 1900, the attorney for the Kentucky Company wrote plaintiff the following letter:

"The contract of April 12, 1899, between P., A. & Co. and yourself, and the correspondence has been submitted to me as counsel for Kentucky Company. You have frequently been advised by P., A. & Co. and the Kentucky Company that the April 12, 1899, contract was properly and legally assigned to the Kentucky Company, which is, and since April 12, 1899, the date of the assignment of the April 12, 1899, contract to the Kentucky Company, has been entitled to

Digitized by Google

have you perform the contract according to its provisions. I am of the opinion and have so given it to the Kentucky Company, that P., A. & Co. have a right to assign the contract. The contract by its very language is expressly made to run in favor of and be obligatory upon the assigns of the parties. The Kentucky Company, being the assignee of the contract and being entitled to have you perform its provisions, has demanded of you frequently that you make such performance, and thus far you have failed and refused to comply with such request.

"If you persist in such failure and refusal on your part you will necessitate other and different action on the part of the Kentucky Company, which will be compelled to regard your action as a complete and final violation of the contract on your part and will then undertake to hold you liable for damages for non-compliance.

"You seem to think that you are entitled to have P., A. & Co., guarantee the Kentucky Company. P., A. & Co. having a right to assign the contract, did assign it, and the Kentucky Company is entitled to demand strict compliance on your part with its provisions. As to whether or not P., A. & Co. would be liable in case the Kentucky Company violated the agreement is a question with which the Kentucky Company is not concerned and which is not now pertinent to this discussion.

"You are already in substantial default, but before advising the company to take final action I send you these lines, to which I invite reply by early mail."

On April 2, 1900, plaintiff wrote to defendants the following letter:

"I enclose you a copy of a letter this day written to Levy Mayer, General Counsel of Kentucky Distilleries & Warehouse Company by my attorneys, Walker & Slack, in relation to my contract with you. I cannot agree to release you from your old obligation assumed in your contract with me, and do not consider that you have the right to be released without my consent. On December 28, 1899, I wrote you, offering to make drafts upon the Kentucky Distilleries & Warehouse Company for each month's production, on condition that I should continue to charge you with the goods and credit you by the payments made by the Warehouse Company, and the further consideration that if that Company should fail to pay at any time, I should make draft upon you. That I was willing to do that for your convenience and accommodation, as you had stated that you did not want the trouble of having to make the entries on your books. I am still willing to do as I then proposed, but am not willing to do anything that will release you from your contract with me. * * * It seems to me that if you construe the contract to mean that you have the right to make a transfer without my consent, and thus release yourself, you are wrong in your construction, and if you do not intend to thus be released, then there is no reasonable objection to your agreeing to remain bound.

"I much prefer settling this matter without litigation, and hope you may see your way clear to an amicable adjustment.

"Please let me know your final conclusion."

The letter enclosed was as follows:

"We do not think the word 'assigns' as used in the contract can properly be construed to mean that either party has the right to substitute another in its place, or make any transfer without the consent of the other party to the contract. To construe it otherwise would be to construe that whenever P., A. & Co. should find it unprofitable, or undesirable, all that they need do would be to make a transfer and tell Field to look to the transferee, and if the transferee should become insolvent, Field would be without any enforceable contract.

"If Field would recognize the Kentucky Company by collecting from it, he would be construed as consenting to the transfer.

"To summarize the question, Field insists that P., A. & Co. have no right to make any transfer or to relieve themselves from their obligations assumed under their contract, without his consent, and that he will not consent or do any act that will be construed into a consent except they first consent to re-

Digitized by Google

main bound. If P., A. & Co. do not intend to be released from their obligations, then all they need do is to agree to remain bound, as required by Field, in his letter of December 28, 1899.

"We make this suggestion after a partial examination of the authorities, though we think the question is elementary. If P., A. & Co. do not desire to relieve themselves of this contract there is no substantial question involved justifying litigation."

Thereafter plaintiff offered to compromise in order to avoid litigation, and defendants refused, threatening plaintiff that he was in danger of putting himself in default. On June 23, 1900, plaintiff wrote as follows:

"I certainly have never desired any litigation, and do not now desire it, and am glad to hear you take the same view. In order to avoid all controversy, I am willing to deliver the whiskey to Kentucky Distilleries & Warehouse Co. and accept payment from it so long as it shall continue to receive and pay for same as stipulated in my contract with you, but will do this without waiving, or intending in any way to waive the right to demand that you shall take and pay for the whiskey until the termination of the contract, if at any time the Kentucky Distilleries & Warehouse Company shall in future make default. So as directed by you, I will make draft on that Company within next ten days for the remainder of the past season's crop with warehouse receipts attached unless in the meantime you shall notify me, after receiving this, not to do so.

"I assure you that all I want is to do nothing that will be considered a waiver of my contract, and as you do not consider that I will waive it with you by delivering the whiskey to Kentucky Distilleries & Warehouse Company under your direction, I am, of course, willing to do it."

Defendants replied as follows:

"We consider that your conduct throughout this whole transaction has made it impossible for us to treat with you upon any basis.

"We cannot give you directions as to what you should do with the Kentucky Company. These are questions which must be settled between you and that Company. After conference with our counsel, we do not intend by any action of ours to revive any of your rights against us which may have been affected by your treatment of the transaction. You have by your attitude placed us on the defensive. You have threatened to sue us and we in turn must keep ourselves in a position, therefore, where in the event you carry out that threat we may take advantage of any technicalities of the situation."

On July 2, 1900, plaintiff sent draft, with warehouse receipts, for 2,200 barrels to the Kentucky Company, which it refused to receive. On July 5, 1900, plaintiff telegraphed the Kentucky Company asking for an explanation of the refusal. The Kentucky Company replied as follows:

"The papers are incorrect: were returned to the bank with explanation to the bank to that effect. We wish to state that in refusing to accept your draft for the above reason we do not waive our rights to refuse acceptance of any future drafts for any other cause which may exist in our favor under our contract with you."

Plaintiff continued to request an explanation from the Kentucky Company and the defendants as to the refusal of the Kentucky Company to pay the draft, and for an explanation wherein the papers were incorrect. On July 12, 1900, the Kentucky Company wrote plaintiff as follows:

"The presentation of your draft was the first notice we had of your intention to carry out your contract. In returning your draft, for the reason that the papers were incorrect, we at once notified you that there were possible

Digitized by Google

objections to accepting any draft which you might present for whiskey deliverable under the contract. We have been informed that the owners of your receipts have on several occasions failed to obtain whiskey represented by such receipts. Before accepting and paying for the warehouse receipts we must insist that an agent of this Company go through your warehouse for the purpose of verifying the receipt.

"This can be easily done. In addition, our executive committee is of the opinion that you should give this Company a bond with good and sufficient surety to secure us against any mistake or error in regard to the whiskey covered by the warehouse receipts. Further, we must have an inspection of each day's run by experts of this Company. We therefore request that you will permit our representative to take samples for each day's inspection of the whiskey deliverable to us under our contract for submission to this office for approval."

The subsequent correspondence between the parties is immaterial, except to show that the Kentucky Company, taking advantage of trivial and technical mistakes not going in any way to the root of the contract, insisted upon the conditions as to bonds and inspection, which were unauthorized by the contract. The correspondence, however, shows that after July 2, 1900, the date of the tender of whiskey and warehouse receipts to the Kentucky Company under the contract, it continued to negotiate with the plaintiff, and assumed the existence of the contract during July and August, and on September 25, 1900, it sent to plaintiff a bond to be signed by him, for $100,000, against default in the performance of said contract. In said bond the Kentucky Company inserted, inter alia, the following statement:

"Whereas, said contract and all the right, title and interest of said Paris, Allen & Co. therein, thereto and thereunder have heretofore been assigned and transferred by said Paris, Allen & Co. to Kentucky Distilleries & Warehouse Co., a corporation of New Jersey, and said corporation accepts such assignment and transfer but desires an instrument of indemnity and protection and agrees to become the party of the first part to said contract in the place and stead of said Paris, Allen & Co., and which assignment is hereby consented to by said Field; and

"Whereas, said Kentucky Distilleries & Warehouse Co. is ready to carry out the terms and conditions of said contract upon its part to be carried out and performed, provided said Field makes no default in the performance of any terms and provisions in said contract contained by him to be performed, and provided, further, that this instrument is executed and delivered to said Kentucky Distilleries & Warehouse Co."

To this letter plaintiff made no reply. In October and November, 1900, plaintiff and the Kentucky Company had some correspondence in regard to the mistakes in the earlier invoices, but no further material reference was made to the contract, and plaintiff notified the defendants that he would make the whiskey as agreed for them during the season of 1900 and 1901, and each month forwarded the whiskey and drew on defendants for the amounts due under the contract, but defendants failed to pay therefor, and the plaintiff, having originally, in February, 1901, brought an action to recover damages for the whiskey manufactured under said contract which defendants had refused to receive, abandoned said action, and on October 14, 1901, brought this action, in which, inter alia, it is alleged as follows:

"Fifth. The plaintiff says that on or about the 12th day of February, 1901, and on divers occasions before that time, the said defendants refused to receive or to accept the warehouse receipts tendered, or in any way to perform their contract for the purchase of said whiskey, and notified the plaintiff that

Digitized by Google

they were no longer bound by said contract, and intended no longer to execute and perform the same, or any part thereof, during the remainder of the 15 distilling seasons, and they permanently abandoned said contract and refused to perform the same, or to permit him to perform the stipulations he had undertaken to perform, and they denied, and still deny, that they are bound to perform, and avow that they do not intend further to perform or permit this plaintiff to perform said contract, and openly claim that the same is no longer in force, and no longer valid or enforceable against them."

This allegation is admitted by the fifth paragraph of defendants' answer, in which defendants state, inter alia, that on divers occasions before February 12, 1901, they refused to receive or accept the warehouse receipts tendered by plaintiff, and that on said date they claimed, and still claim, that said contract is no longer in force or valid or enforceable against them, because of plaintiff's breach thereof, and that by reason of such breach they refused to be further bound by said contract.

As bearing upon the effect of plaintiff's offer to fulfill the contract with defendants' assignee, the Kentucky Company, the following letter from defendants to plaintiff, dated November 8, 1899, is important:

"Would it make any difference to you if you waited a little later in the season and ran later in the spring? There would be no objection on our part or that of the Kentucky Distilleries & Warehouse Co. to June goods. We would not want any made in July however. If you can just as well arrange in this way—delaying your starting as late as possible and then running full capacity, making your last drawing late in June, it would suit our arrangements very much better. Furthermore, it would have a good effect on everybody in your neighborhood who is proposing to make whiskey."

Thus the defendants requested such an extension of the distilling season as would permit deliveries in July.

The original contract was made without the knowledge of the plaintiff that it was really for the benefit of the Kentucky Company. In fact, the first letter from the defendants stated that they had sold out their distilleries to the Kentucky Company and wished to substitute plaintiff's whiskey in their own business. It appeared from the evidence that in 1900 the Kentucky Company was reported to be in failing circumstances, and the president of the company testified that, in order to save the credit of the company, he had indorsed for it gratuitously; that "he stood to lose at the time," but by reason of his pride in the success of the company he made said indorsements. The court correctly charged the jury on the question whether the plaintiff or defendants first repudiated the contract, and stated that, if the plaintiff was the first to repudiate it, he could not recover unless such repudiation was subsequently waived. The court further charged the jury that the defendants had the right to assign said contract, and were not thereby released from liability, and that it was the duty of plaintiff to make deliveries to the Kentucky Company under said contract, unless released by the acts of defendants. The court then reviewed the correspondence between the parties, and the evidence as to the insolvency of the Kentucky Company, and the claim of the plaintiff that the conduct of defendants showed that it was their obvious purpose to procure a release of the liability under said contract, and the claim of defendants that they declined to be bound by the contract because of the breaches on the part of the plaintiff already referred to, and that, having once declined

Digitized by Google

to carry it out, the Kentucky Company refused to revive it except upon the furnishing of a bond by plaintiff. The charge of the court on this branch of the case was quite full, and much of it was excepted to by defendants, but these exceptions need not be discussed, because the evidence is all in writing, and, in our opinion, warranted instructions less favorable to defendants than what were actually given. The evidence abundantly justified the conclusion that defendants made the assignment, not in good faith, but for the purpose of securing a release from their liability under the original agreement, and sought to trick the plaintiff into some act or omission which might be availed of as a plausible excuse for defendants' own delinquency, and that the endeavors of plaintiff to reach a fair understanding of the situation were not evidence of such a repudiation on his part as would justify the defendants in rescinding the contract.

The practical construction put upon the contract by both parties was that the contract was not assignable by either party without the consent of the other party. The plaintiff so stated in his original letter. The defendants accepted said statement, and put the same practical interpretation upon the contract by refusing to accept the plaintiff's proposed agreement to assign, and substituting one prepared by their counsel. By defendants' proposed contract it was provided, inter alia, that the Field corporation should agree to perform the said contract with the Kentucky Company "the same as though said contract of April 12, 1899, had been made by and between" the Kentucky Company and the Field corporation, and it specifically provided for a guaranty by the plaintiff of performance of the contract by the Field corporation. When the plaintiff insisted that he was entitled to a similar guaranty, no reply was made to his letter, but the defendants wrote afterwards, giving further instructions as to the way in which they, the defendants, wished the contract to be carried out. Subsequently, when plaintiff shipped whiskey to them and drew on them therefor, they refused to honor any further drafts, as their interest in the contract had been transferred to the Kentucky Company; and, when they transferred the shipments of whiskey to the Kentucky Company, they explained their conduct on the ground that the contract had been turned over to the Kentucky Company, who had assumed the same and would pay for the whiskey. Plaintiff offered to make shipments to the Kentucky Company as requested by defendants, on condition that by so doing he was not to be considered as in any way releasing defendants from their contract. But the defendants made no reply to this letter. The only suggestion made by plaintiff was that, if defendants did not intend to take advantage of assignment to the Kentucky Company in order to secure a release from their obligation, there was no reasonable objection to their stating that they agreed to remain bound by the contract. The letter of counsel for plaintiff takes the same ground, while the letter from counsel for defendants, referring to the question as to whether the defendants would be liable by reason of plaintiff's dealings with the Kentucky Company, disposes of the question by saying that it is one "with which the Kentucky Company is not concerned, and which is not now pertinent to this discussion." The subsequent correspondence does not show a situation in any way more favorable to defendants, and need not be discussed.

Digitized by Google

Prior to the close of the distilling season, as extended to July, 1900, the plaintiff offered to fulfill the contract with the Kentucky Company, and on July 2d duly tendered the whiskey to the Kentucky Company, in accordance with the contract. Up to that time the defendants had not elected to treat the contract as broken. They continued to treat the contract as existing for several months thereafter, and, while they were making technical objections, they were still negotiating with plaintiff and assuming the existence of the contract. In these circumstances the court would have been justified in instructing the jury to render a verdict for the plaintiff on the ground that defendants had expressly and specifically repudiated the contract, when there had been no breach on the part of the plaintiff which entitled them to do so.

Various errors were assigned to the charge of the court and its refusal to charge upon the question of damages. These will be considered in the order in which they were discussed in defendants' brief.

The first point is stated as follows:

"Defendants were entitled to an instruction to the effect that no damages, or, at most, only nominal damages, might be recovered against them, because, under the agreement, defendants were entitled not only to the services, but the exclusive output of plaintiff's distillery, etc. Upon defendants' breach, plaintiff was obligated to employ his services and plant to minimize defendants' damages. Therefore, in mitigation of damages, defendants are entitled to be credited with all revenues which might be obtained by plaintiff in the operation of said plant during the term of the agreement. These revenues could only be ascertained at the expiration of the agreement."

These questions are raised by exceptions to the refusal of the court to charge as follows:

"That if the jury believe from the evidence that the plaintiff, Field, on or after October 14, 1901, received, or could by reasonable efforts have received, contracts for the purchase of all or a part of his crops about or thereafter to be manufactured by him for or during any part of 13 distilling seasons then ensuing, at prices equal to or in excess of the cost of the manufacture of the same, it was his duty to make such contracts in order to reduce his losses, and, consequently, the damages he claims in this case."

Also, by the exception to the admission of evidence showing the cost of the manufacture of whiskey during the seasons of 1899–1900, and 1900–1901, and the average cost or profit of warehousing such whiskey, and of the high and low price of cash corn on the Chicago Board of Trade for the months of October, from 1873 to 1901, both inclusive, said latter evidence having been offered in connection with the probable cost of future crops of whiskey.

The general rule is that an unqualified refusal, without legal excuse, to further perform a continuing executory contract, authorizes the injured party to sue at once for any damage he has suffered from the breach. Roehm v. Horst, 178 U. S. 1, 20 Sup. Ct. 780, 44 L. Ed. 953; Marks v. Van Eeghen, 88 Fed. 853, 30 C. C. A. 208; Masterton v. The Mayor, 7 Hill, 61, 42 Am. Dec. 38; Devlin v. The Mayor, 63 N. Y. 25; In re Stern, 116 Fed. 604, 54 C. C. A. 60; Hochster v. De La Tour, 2 El. & Bl. 678. The measure of damages in such a case is the difference between the contract price and the cost of manufacture. Hinckley v. Pittsburgh Bessemer Steel Co., 121 U. S. 264, 271, 7 Sup. Ct. 875, 30 L. Ed. 967.

Digitized by Google

"Whenever one party thereto is guilty of such a breach as is here attributed to the defendant, the other party is at liberty to treat the contract as broken, and desist from any further effort on his part to perform; in other words, he may abandon it, and recover as damages the profits which he would have received through full performance. Such an abandonment is not technically a rescission of the contract, but is merely an acceptance of the situation which the wrongdoing of the other party has brought about." Anvil Mining Co. v. Humble, 153 U. S. 540, 14 Sup. Ct. 876, 38 L. Ed. 814.

The defendants do not controvert the doctrine laid down in these cases, but seek to distinguish the case at bar, on the ground that it involved the breach of an exclusive output contract; and they contend that in such a case it is the duty of the manufacturer, in order to minimize the damage, to devote his entire capacity to the manufacture of the article contracted for for others, if a demand exists for the article. Counsel for defendants says in his brief as follows:

"Plaintiff was bound to continue to operate said distillery and employ his services in the future years in the same general manner as he would have been obligated to employ them had the agreement been in the course of performance. * * * If the plaintiff in the present case could have sold the output of his distillery in the market at a price above the cost of production, then he sustains no greater damage than the difference between market price and the price at which defendants contracted to take the whiskey, and no greater damages should have been awarded him. As we have already pointed out, the plaintiff not only could have sold the output of his distillery in the market at a price above the cost of production, but at a price considerably above the price at which Paris, Allen & Co. contracted to take the whiskey."

A preliminary objection to this contention is found in the evidence that this agreement was not one for the manufacture and sale of the entire output of plaintiff's factory. It was expressly provided that, if the price of corn on the first Tuesday of October should exceed 45 cents per bushel, the plaintiff would not be obligated to manufacture and deliver the defendants any whiskey; but that, if he should manufacture in excess of 500 barrels in such season, he would then be obliged to manufacture an agreed amount for defendants. Furthermore, it was provided that the plaintiff should have the right to manufacture for his own use not to exceed 500 barrels of whiskey, during any of said distilling seasons, in excess of the quantities to be manufactured for the defendants, and that he might further manufacture whiskey in excess of said 500 barrels by a payment of $5 a barrel to the defendants. The only limitation upon such manufactures and sales by the plaintiff in excess of the amount contracted to be manufactured and sold to defendants was that said whiskey should not be sold to any distillery or wholesale liquor dealer in the United States. But we are not aware of any rule of law which would have obliged this plaintiff, whether his contract was for an exclusive output or otherwise, to risk his capital in, and devote the capacity of his factory during a period of years to, the manufacture of whiskey in order to attempt to minimize the damages for which the defendants are liable by reason of their breach of the contract. No federal case has been called to our attention which supports any such view, or which indicates that a different rule of law is to be applied in the case of a breach of a contract for an exclusive output, as distinguished from other contracts to manufacture. The two federal cases

Digitized by Google

cited by counsel for defendants are Warren v. Stoddart, 105 U. S. 224, 26 L. Ed. 1117, and Wicker v. Hoppock, 6 Wall. 94, 18 L. Ed. 752. These cases do not support his contention. In Wicker v. Hoppock the court stated that where a party was entitled to the benefits of a contract, and could save himself from a loss arising from a breach of it at a trifling expense or with reasonable exertions, it was his duty to do so, but refused to apply the rule in said case, because the contract was one which provided for a payment, as distinguished from one of indemnity, and held that, in the former, a recovery might be had as soon as there was a breach of the contract, and that the measure of damages was the full amount agreed to be paid. In Warren v. Stoddart the court found that there had been no breach of contract, and held that no damages were recoverable by the defendant, who claimed that said contract had been broken, and who sought to set off damages which he had unlawfully aggravated; and held that, even if he had been entitled to recover, he could not wantonly and unlawfully aggravate the damages. Kincaid v. Price (Colo. App.) 70 Pac. 153, and Frazier v. Clark, 88 Ky. 260, 10 S. W. 806, 11 S. W. 83, were chiefly pressed on the argument in support of the exclusive output contention. In Kincaid v. Price, decided by the Court of Appeals of Colorado September 8, 1902, it is not clear that the fact that the contract was for an exclusive output had any bearing on the decision of the court that the measure of damages was the difference between the market value and the contract price. The court, relying on some statements of text-writers and early decisions of courts not of last resort, held that the above rule was the general rule for measuring damages in actions for breach of such executory contracts. In Frazier v. Clark it appeared that the plaintiffs, after breach of the contract, continued to operate their mill until it was sold, "making as much or more profit than would have been made if the contract had not been violated by the defendant." Of the 13 cases cited in support of the alleged distinction, the foregoing are the only ones which involved the element of an exclusive output. In five of the other cases the proof showed a tender of other goods or employment to the plaintiff after the breach, and an opportunity to make use of the mill, or wagon, or ship for the services of which the contract had provided. In Dunn v. Daly, 78 Cal. 640, 21 Pac. 377, the plaintiff himself broke the contract. In Peck & Co. v. Kansas City Metal Roofing & C. Co. (Mo. App.) 70 S. W. 169, the court applied the rule of master and servant to an advertising contract. The cases of Everson v. Powers, 69 N. Y. 527, 42 Am. Rep. 319; Bassett v. French (Com. Pl.) 31 N. Y. Supp. 667; Mt. Hope Cemetery Association v. Weidenmann, 139 Ill. 67, 28 N. E. 834; and Sommer v. Conhaim et al. (Sup.) 54 N. Y. Supp. 146—are all personal service cases, and, even if analogous to the case at bar, do not support defendants' contention.

The rule of damages in personal service cases is laid down in Pierce v. Tenn. Coal, Iron & R. R. Co., 173 U. S. 1, 19 Sup. Ct. 335, 43 L. Ed. 591, where the court says:

"But he had the right to elect to treat the contract as absolutely and finally broken by the defendant; to maintain this action, once for all, as for a total breach of the entire contract; and to recover all that he would have received in the future, as well as in the past, if the contract had been kept. In so

Digitized by Google

doing he would simply recover the value of the contract to him at the time of the breach, including all the damages, past or future, resulting from the total breach of the contract. * * * In assessing the plaintiff's damages, deduction should, of course, be made of any sum that the plaintiff might have earned in the past or might earn in the future, as well as the amount of any loss that the defendant had sustained by the loss of the plaintiff's services without the defendant's fault."

The general rule in the case of a manufacturer or vendor is restated and applied by the United States Supreme Court in Roehm v. Horst, 178 U. S. 1, 21, 20 Sup. Ct. 780, 788, 44 L. Ed. 953:

"If a vendor is to manufacture goods, and during the process of manufacture the contract is repudiated, he is not bound to complete the manufacture, and estimate his damages by the difference between the market price and the contract price, but the measure of damage is the difference between the contract price and the cost of performance. Hinckley v. Pittsburgh Company, 121 U. S. 264 [7 Sup. Ct. 875, 30 L. Ed. 967]. Even if in such cases the manufacturer actually obtains his profits before the time fixed for performance, and recovers on a basis of cost which might have been increased or diminished by subsequent events, the party who broke the contract before the time for complete performance cannot complain, for he took the risk involved in such anticipation."

The evidence as to the cost of producing the two prior crops of whiskey, and of the price of corn in preceding years, furnished a basis on which the jury might reasonably determine the probable cost of future crops of whiskey.

"The jury, in assessing the damages, would be justified in looking to all that had happened or was likely to happen to increase or mitigate the loss of the plaintiff down to the day of trial." Hochster v. De La Tour, supra.

"It should be borne in mind that the difficulty of making proof springs, like the plaintiff's right to recover damages, out of the wrongful act of the respondents, who should not be suffered to reap advantage from their own wrong by requiring that kind of proof which their wrongful action has rendered it impossible or difficult for the plaintiff to obtain." Lincoln v. Orthwein, 120 Fed. 880, 57 C. C. A. 540.

In Anvil Co. v. Humble, supra, plaintiffs contracted to remove all of the ore in one of the shafts of defendant's mine. Defendant refused to permit plaintiffs to complete their contract. The same objection was made there as is here made—that the future profits were uncertain. The Supreme Court held that testimony as to the cost of mining each ton of ore, and as to the amount of ore on hand when the work was stopped, was admisible to show the profit which plaintiffs would have made, and said as follows:

"It is true that the cost of mining the remaining ore might differ from that of mining the ore which had already been taken out. But still, proof of the cost of taking out that which had been mined, and of the condition of the mine as it was left, furnished a basis upon which a reasonable estimate could be made as to the cost of extracting the remaining ore."

Wakeman v. Wheeler & Wilson Mfg. Co., 101 N. Y. 205, 4 N. E. 264, 54 Am. Rep. 676.

We conclude, therefore, that the foregoing exceptions are not well founded.

In connection with said evidence as to the price of corn, defendants further contend that, as plaintiff was under no obligation to manufacture in any year if the price of corn exceeded 45 cents on the Chicago

Digitized by Google

Board of Trade on the first Tuesday of October in said year, the agreement was not mutually binding, and hence there can be no recovery for years subsequent to October, 1901. This question is raised by the refusal of the court to charge that, if the jury should find that the price of corn in October, 1901, was more than 45 cents, the contract to manufacture was optional with the plaintiff, and he could not recover any damages by reason of defendants' refusal to receive and pay for any whiskey thereafter to be delivered by plaintiff, and to its charge as follows:

"If you believe from the evidence that the plaintiff would have taken advantage of that provision of the contract in the years 1901 and 1902, when the price of corn was in excess of 45 cents per bushel, as appears by the proofs, and would not have manufactured whiskey during those years, then you ought not to allow plaintiff any damage for those years, or for any other years in which you believe from the evidence that he would not have manufactured any whiskey for the use of defendants. * * * The question of the future price of corn as bearing on the plaintiff's damages is of prime importance. It is for you to say, from all the evidence and circumstances what the probabilities are with respect to the continuance of the price of corn at the rate of 45 cents per bushel, and whether in view of all the facts, it was probable that plaintiff would have manufactured whiskey at a profit in succeeding years, and in years when the price of corn exceeded the sum stated."

And counsel for defendants argues that the jury were thus left to conjecture whether the price of corn would exceed 45 cents, and, if so, whether plaintiff would have continued to manufacture, and, if so, whether he would have met a loss or made a gain, and that the future prices were to be determined by the past prices of corn. Counsel for defendants have referred us to a line of authorities which hold that, where a contract is unilateral by reason of the absence of any obligation on the part of one of the parties to perform, it cannot be enforced, and only nominal damages can be recovered for the breach by the other party. We are not disposed to question the correctness of this proposition, but we think the case at bar does not fall within the rule thus stated. It is well settled that a contract for a sale, which leaves it practically optional with one of the parties as to the fulfillment of the agreement to manufacture or to purchase, the price to be paid, or as to other material portions of the contract, will be held to be void, and no damages can be recovered for its breach. Troy Laundry Machine Co. v. Dolph, 138 U. S. 617, 11 Sup. Ct. 412, 34 L. Ed. 1083; American Cotton Oil Co. v. Kirk, 68 Fed. 791, 15 C. C. A. 540; Crane v. C. Crane & Co., 105 Fed. 869, 45 C. C. A. 96. In the Dolph Case, on which much stress is laid by counsel for defendants, the court held that damages could not be recovered for the breach of indefinite provisions in respect to an option in favor of one party as to a matter merely incidental and subordinate to the main contract. But in the case at bar the contract provided for the exercise of options by either party as to the performance of the main agreement for manufacture, upon sufficient and mutual considerations. The option reserved by the plaintiff was not one which necessarily, or within the contemplation of the parties, extended during the whole of the term of the contract, but was a provision for the mutual protection of the parties as to said main obligation in case the price of corn should be 45 cents per bushel in any season or seasons during the term of said contract. It did not give to plaintiff a right arbitrarily to terminate the contract, but only on certain conditions, which might

Digitized by Google

never arise. Anvil Co. v. Humble, supra. By the contract the plaintiff was absolutely bound to manufacture and deliver the exclusive output of his factory, with certain exceptions already noted, during each year of the term of the lease. The proviso which relieved him from this obligation when the price of corn should exceed 45 cents was one which also virtually contained a penalty for such failure to manufacture for defendants, in that it denied him the privilege of manufacturing any whiskey during such season, except 500 barrels for his own use, unless he should also manufacture and deliver to the defendants at the contract price, and at their option, 5,000 barrels during such season. The contract, therefore, was one binding upon the plaintiff, when the price of corn was 45 cents, either to manufacture as agreed, or to practically close his entire plant. In view of these mutual stipulations relating to said qualified option, and which served as a consideration passing to and from each of the parties, we think the obligation was a mutual one, and that the question of the right of recovery was properly left to the jury under the instructions of the court as given above.

The contract contained a provision that, in case of fire or accident which might prevent plaintiff from manufacturing in any one season, he should be excused for such failure. It is not claimed that this provision made the contract unilateral. And if the contract had contained an agreement that, in case of a strike, the entire failure of the corn crop, or the death of the plaintiff, in any year, the manufacturer should be relieved from the obligation of fulfilling the contract during the year when such casualty happened, it could not reasonably be claimed that such agreement constituted a defense against all claims for damages suffered during a period of years by reason of the default of the other party. And yet the charge requested by defendants as above was to the effect that, if the price of corn at the time when they, the defendants, broke the contract, happened to be more than 45 cents per bushel, the plaintiff could not thereafter recover any damage by reason of defendants' breach. The object sought, in case of a breach of contract, is to secure to the party just compensation for his damages suffered by reason thereof. It would be a travesty upon justice to apply the rule contended for by defendants, and thus enable them to escape all liability, because of the possibility that plaintiff might at some time have the right to exercise said option, and elect so to do at the penalty of closing his plant.

The next exception is to the exclusion by the court of evidence that whiskey was manufactured by the plaintiff during the season of 1901 and 1902, and of the price at which said whiskey was sold. It was stipulated that such evidence, if admitted, would show that the prices received by plaintiff were largely in excess of the contract price. Counsel for plaintiff argues that, as defendants had no further interest in plaintiff's business after the repudiation of the contract, it was immaterial whether or not he continued thereafter to manufacture. We have already discussed this contention. But while, in the absence of evidence as to plaintiff's actual loss, the rule of damages is as stated above, yet, as the first consideration is to ascertain actual damages where possible, if evidence is available of manufacture and sale after such breach, such evidence should go to the jury, in order to enable them the more nearly to approximate plaintiff's actual damages. Diamond Co. v. San An-

Digitized by Google

tonio R. R. Co. (Tex. Civ. App.) 33 S. W. 987; Hochster v. De La Tour, supra; Wakeman v. Wheeler & Wilson Mfg. Co., supra. Especially is this so, in view of the admission of evidence as to the value or profit to plaintiff derivable from storage. If the jury were at liberty to award plaintiff damages for storage during the years succeeding the breach, they were bound to deduct therefrom such amounts as plaintiff actually received for his warehouse and factory during said season of 1901–1902. The exclusion of said evidence was clearly error. The ruling was directly contrary to the views expressed by the Supreme Court in Hinckley v. Steel Co., supra, where the court said as follows:

"The Circuit Court finds that it would have cost the plaintiff $50 per ton to have manufactured and delivered the rails called for by the contract, according to its terms; that the profits of the plaintiff, if the conduct of the defendant had not prevented it from fulfilling the contract, would have been $8 per ton on each of the 6,000 tons, being $48,000; and that the plaintiff manufactured and sold to other persons 4,000 tons of rails from the materials purchased by it with which to perform the contract with the defendant, and received for such rails $54.60 per ton, and made a profit of $1.60 per ton on the 4,000 tons, being a profit, in all, of $6,400. Deducting this $6,400 from the $48,000 leaves $41,600, for which amount the judgment was finally entered."

Error is also assigned to the refusal of the court to permit expert witnesses to answer the following question:

"Taking a contract for the sale of the product of a distillery, the contract being dated April 12, 1899, covering five distilling seasons for an annual output of 3,000 barrels, and the next ten distilling seasons for an annual output of 3,500 barrels, the distillery being located in Owensboro, Kentucky, and its total capacity being about 3,000 barrels, and the total value of the distillery and property being about $35,000, and the contract price of its output being 30 cents per proof gallon; supposing that two seasons of that contract has elapsed, and that thirteen seasons were still to elapse, at the time when the contract was rescinded or canceled or terminated, what, in your opinion, would be a reasonable deduction for the less time engaged, and for release from care, trouble, risk, and responsibility attending a full execution of the contract; what proportion of the profit which the contract would have yielded, if any, to the manufacturer?"

The exclusion of this evidence is now sought to be justified on the ground that the witnesses were not qualified to testify as experts, and that, in any event, the jury were the sole judges of what deductions were to be made. The witnesses duly qualified as experts, and no objection was made at the trial on the ground that they were not thus qualified. That the defendants were entitled to such deductions is settled by the authorities. Hinckley v. Steel Co., supra; Masterton v. The Mayor, supra; United States v. Speed, 8 Wall. 77, 19 L. Ed. 449. And the court charged the jury to this effect, as appears from the following excerpt from the charge:

"If the jury believe from the evidence that the said defendants committed a breach of said agreement of April 12, 1899, then in estimating the damages, if any, sustained by plaintiff by reason of such breach after October 14, 1901, the jury should make a reasonable deduction for the less time engaged, and for release from care, trouble, risk, and responsibility attending a full execution of said agreement by the plaintiff."

The general rule is well settled that, where a subject is one involving special knowledge upon subjects as to which the jury are not as well able to judge for themselves as one familiar with such matters, the

Digitized by Google

testimony is properly admitted to aid them in reaching their conclusion. Transportation Line v. Hope, 95 U. S. 297, 24 L. Ed. 477; L. S. & M. S. R. R. Co. v. B. & O. & C. R. R., 149 Ill. 272, 37 N. E. 91; Campbell v. Mayor (C. C.) 81 Fed. 182. In Herring v. Gage, 12 Fed. Cas. 44, Judge Wallace said:

"By further exceptions the defendants insist that the master's findings as to the actual savings realized by the defendants by the use of this device is not sustained by the evidence. This finding is based in part upon the testimony of various experts who were familiar with the practical working of the device in other mills, and who were permitted to state the quantity of flour lost when the device was not used, thus estimating the saving realized under their observations, and basing upon that their opinion of the saving ordinarily gained by the use of the device. The conditions under which the device was used differed in the different instances observed by the witnesses. It is contended that this testimony is not entitled to consideration. To this I cannot agree."

In the case at bar it would be difficult, if not impossible, for a jury in the city of New York to determine with any degree of accuracy what would be a reasonable deduction for time and release from risk and responsibility attending the execution of a contract for the manufacture of whiskey during a period of years in a distillery in Kentucky, without some testimony from those familiar with such business. The determination would involve, inter alia, questions of wear and tear, of insurance, of cost of maintenance and care of the property, and the testimony of experts on those subjects was competent and material. The particular question, however, was too comprehensive; it was not calculated to elicit the experience of the witness, from which the jury might have drawn its own conclusions, but called for a general conclusion of the witness upon all the elements involved. In other words, it sought to substitute the witness for the jury as assessor of the damage, and objection to it was properly sustained.

Error is further assigned to the admission of evidence as to the cost of storage of whiskey, and the profit per year on such storage, and exception is taken to the refusal of the court to charge that the plaintiff was not entitled to recover damages for loss of expected profits by reason of the storage of whiskey which might have been manufactured under said agreement. This question as to the allowance of damages for lost profits on storage is not free from doubt. In view, however, of the distinct provision in the contract for payment of storage, we think it was competent to show the usual custom as to storage in such cases, as indicating the profit which was in the minds of the parties when the contract was entered into, especially in view of the testimony of one of the defendants:

"The profits which would have been realized had the contract been performed, and which have been prevented by its breach, are included in the damages to be recovered in every case where such profits are not open to the objection of uncertainty or of remoteness, or where, from the express or implied terms of the contract itself, or the special circumstances under which it was made, it may be reasonably presumed that they were within the intent and mutual understanding of both parties at the time it was entered into." Howard v. Stillwell & Bierce Mfg. Co., 139 U. S. 199, 206, 11 Sup. Ct. 500, 503, 35 L. Ed. 147.

Digitized by Google

Cincinnati Gas Co. v. Western Siemens Co., 152 U. S. 200, 14 Sup. Ct. 523, 38 L. Ed. 411.

It was conceded that the universal custom of the whiskey trade is to keep Kentucky whiskey in the warehouse for several years, and that there is a profit in such business. One of the defendants testified that the business of warehousing whiskey is a very safe source of revenue to the distiller, and that, even if the distiller were to sell his product at cost, he could still count upon the average of three or four years' storage of the whiskey before it leaves his hands. The charge of the court on this point was as follows:

"It is claimed that the sum of five cents per barrel for storage monthly which the defendants agreed to pay, would have been a strong inducement to continue such manufacture, especially as it is the custom of the trade to allow barrels of whiskey to remain in storage for two or three years after manufacture. This is an item of testimony which you should consider; in connection, however, with the fact that it does not appear how long the whiskey would have remained in storage if the contract had been performed. Its disposition was absolutely in the control of the defendants after the delivery of the warehouse receipts to them. The warehouse receipts were constructive deliveries of whiskey, and are transferable by indorsement. And it follows that whiskey which remains on storage, and which has been delivered in the manner stated, may be removed from storage whenever the owner desires its removal. You should consider these circumstances in making your calculations to ascertain plaintiff's gain and profit, provided you conclude he has sustained damage."

We think this charge was justified by the evidence, and was sufficiently favorable to defendants.

The judgment is reversed, and the case remanded for a new trial.

(130 Fed. 659.)

McKNIGHT et al. v. UNITED STATES.

(Circuit Court of Appeals, Ninth Circuit. May 2, 1904.)

No. 1,036.

1. INDIANS—ACTION BY UNITED STATES TO PROTECT RIGHTS—CATTLE ISSUED FOR STOCKRAISING PURPOSES.

Under the act of Congress ratifying agreements made with Indian tribes in Montana, including the Blackfeet, which provide, inter alia, for the issuance of cattle to such Indians for stockraising purposes, and that all such cattle and their increase shall bear the brand of the Indian Department, and shall not be sold, exchanged, or slaughtered, except by consent of the agent in charge, an Indian to whom such cattle are issued acquires only a conditional ownership for the purposes stated in the act, and it is the right and duty of the United States to protect such ownership, for which purpose it may maintain an action in a federal court in behalf of an Indian from whom cattle so issued have been unlawfully taken; and such right is not affected by the fact that an Indian in whose behalf such an action is brought is a woman who is married to a white man, and has thereby become a citizen of the United States, but who remains on the reservation with her tribe—it being expressly provided by Act Aug. 9, 1888, c. 818, 25 Stat. 392, 1 Supp. Rev. St. p. 608, that such marriage and citizenship shall not "impair or in any way affect the right or title of such married woman to any tribal property or interest therein."

Digitized by Google

2. UNITED STATES—ACTION BY—EFFECT OF STATE STATUTES.
The right of the United States to maintain an action in respect to a governmental matter cannot be affected by a state enactment requiring a notice to be given or demand made as a condition precedent to suit.

3. SHERIFFS—LEVY OF ATTACHMENT—SEIZING PROPERTY OF THIRD PERSON.
A sheriff is not protected in levying an attachment against a man on cattle owned by his Indian wife residing on a reservation, which cattle she could not lawfully dispose of, except with the consent of the Indian agent, and which, as required by law, bore the brand of the Indian Department, as well as her own brand, which was different from that of her husband; and it is immaterial that they were in the possession of the husband, or with cattle owned by him—the brands being sufficient to put him on inquiry as to the ownership.

4. CONFUSION OF GOODS—APPLICATION OF DOCTRINE—CATTLE.
The doctrine of confusion of goods has no application to cattle or horses, or other property of similar nature, that can be readily identified.

5. CONVERSION—EVIDENCE OF OWNERSHIP—DECLARATIONS OF PERSON IN POSSESSION.
In an action against a sheriff and an attaching creditor for conversion of property of the debtor's wife by its seizure and sale under the attachment, declarations of the husband to the creditor that the property was in his possession and that he was the owner are not admissible to prove his ownership as against plaintiff, especially where such declarations were made prior to the suit, and were therefore not a part of the res gestæ.

6. SAME—ACTION BY UNITED STATES.
In an action by the United States, as guardian of an Indian woman, for the conversion by defendant of cattle issued to her by the government for stockraising purposes, and which she had no power to dispose of, declarations by her as to the ownership of the cattle are inadmissible against the plaintiff.

7. SAME—DECLARATIONS OF OFFICER IN MAKING LEVY.
Declarations of an officer, in making a levy, going to show his knowledge that the property levied on was owned by a third person, or that he was put on inquiry as to such ownership, are admissible in an action in behalf of such third person for the conversion.

8. TRIAL—SEPARATION OF JURY—ADMONITION.
The failure of the court, on the separation of the jury for a noon recess during a trial, to admonish them against conversing about the case or forming an opinion thereon, as required by a statutory provision, is not a material error, where the admonition had been given on their previous separations during the same trial.

9. SAME—REMARKS OF COURT TO JURY—HARMLESS ERROR.
Remarks of the court in its charge to the jury with respect to the conduct of the case by counsel *held*, while improper, not to have constituted prejudicial error.

In Error to the District Court of the United States for the District of Montana.

McConnell & McConnell, for plaintiffs in error.
Carl Rasch, U. S. Atty.

Before GILBERT and ROSS, Circuit Judges, and HAWLEY, District Judge.

ROSS, Circuit Judge. This action was brought by the United States, as guardian of Josephine Hall, an Indian woman, for the conversion by the defendants to the action of 34 head of cattle, alleged

Digitized by Google

to have been owned, held, and possessed by this Indian, subject to the control of the government, and of the value of $1,125. The answer of the defendants put in issue the averments of the complaint, and also alleged in defense that the defendant Taylor is, and was at the times in question, the duly elected, qualified, and acting sheriff of the county of Teton, state of Montana; that on the 25th day of September, 1901, one John Hall was, and from thenceforth until November 9, 1901, remained, the sole owner of the cattle mentioned in the complaint; that thereafter, to wit, on the 25th day of September, 1901, an action was commenced by the defendant McKnight against John Hall in the district court of the Eleventh judicial district of the state of Montana, in and for the county of Teton, to recover the sum of $603.72, with interest thereon at the rate of 1 per cent. per month from May 8, 1900, with attorney's fees and costs of suit, according to the terms of a certain promissory note of said Hall; that process was duly issued and served upon Hall in that action, and on September 25, 1901, a writ of attachment was regularly issued therein in due form, which writ of attachment was placed in the hands of the defendant Taylor, as sheriff of the county, with instructions to levy the same upon the cattle mentioned in the complaint, which was accordingly done; that on the 25th day of October, 1901, judgment was duly entered in the action of McKnight against John Hall for the sum of $762.65, upon which execution was duly issued in due form, under which the cattle in question were sold for the sum of $1,247 on November 12, 1901; and that John Hall was the owner of and in possession of the cattle at the time of the levy. These averments of the answer were put in issue by the replication filed by the plaintiff. The case came on for trial before the court with a jury, and resulted in a verdict and judgment for the plaintiff, and is brought here by the defendants below on writ of error.

The first, and principal, contention on the part of the plaintiffs in error is that the court below was without jurisdiction of the subject-matter of the action, "for the reason that Josephine Hall is a citizen of the United States, and this action is between citizens of the same state, and the amount involved does not exceed $2,000, and the United States is not a proper party plaintiff in this action." The case shows that some years prior to the transactions in question Josephine Hall married John Hall, who was a white man and a citizen of the United States. Josephine Hall was a member of the Blackfeet tribe of Indians, and as a matter of fact lived upon its reservation and received from the government, through its agent there, issues of cattle and other things, like the other Indians of the tribe. John Hall entered upon a piece of public land, situated across a creek that separated such public land from the Indian reservation, and entered that piece of land as a homestead, and claimed his residence thereon, which was but a short distance from the house in which his Indian wife actually lived, and where he visited her, as she also did him, occasionally.

The act of Congress of February 8, 1887, entitled "An act to provide for the allotment of lands in severalty to Indians on the various

Digitized by Google

reservations, and to extend the protection of the laws of the United States and the territories over the Indians, and for other purposes" (24 Stat. 388, c. 119, 1 Supp. Rev. St. pp. 534, 536), provided in its sixth section as follows:

"Sec. 6. That upon the completion of said allotments and the patenting of the lands to said allottees, each and every member of the respective bands or tribes of Indians to whom allotments have been made shall have the benefit of and be subject to the laws, both civil and criminal, of the state or territory in which they may reside; and no territory shall pass or enforce any law denying any such Indian within its jurisdiction the equal protection of the law. And every Indian born within the territorial limits of the United States to whom allotments shall have been made under the provisions of this act, or under any law or treaty, and every Indian born within the territorial limits of the United States who has voluntarily taken up, within said limits, his residence separate and apart from any tribe of Indians therein, and has adopted the habits of civilized life, is hereby declared to be a citizen of the United States, and is entitled to all the rights, privileges, and immunities of such citizens, whether said Indian has been or not, by birth or otherwise, a member of any tribe of Indians within the territorial limits of the United States without in any manner impairing or otherwise affecting the right of any such Indian to tribal or other property."

The first and second sections of Act Aug. 9, 1888, c. 818, 25 Stat. 392, 1 Supp. Rev. St. p. 608, entitled "An act in relation to marriage between white men and Indian women," are as follows:

"Be it enacted," etc., "that no white man, not otherwise a member of any tribe of Indians, who may hereafter marry an Indian woman, member of any Indian tribe in the United States, or any of its territories except the five civilized tribes in the Indian Territory, shall by such marriage hereafter acquire any right to any tribal property, privilege, or interest whatever to which any member of such tribe is entitled.

"Sec. 2. That every Indian woman, member of any such tribe of Indians, who may hereafter be married to any citizen of the United States, is hereby declared to become by such marriage a citizen of the United States, with all the rights, privileges, and immunities of any such citizen, being a married woman: Provided, that nothing in this act contained shall impair or in any way affect the right or title of such married woman to any tribal property or any interest therein."

It has been held by this court, by the Circuit Court of Appeals for the Eighth Circuit, by the Supreme Court, and by other courts, that the citizenship conferred upon the allottees under and by virtue of the act of February 8, 1887, did not operate to withdraw them from the supervision, control, and protection of the government, but that such Indians still remained wards of the nation. United States v. Rickert, 188 U. S. 432, 23 Sup. Ct. 478, 47 L. Ed. 532; Farrell v. United States, 110 Fed. 942, 49 C. C. A. 183; Eells v. Ross, 64 Fed. 417, 12 C. C. A. 205; United States v. Logan (C. C.) 105 Fed. 240; United States v. Flournoy Live Stock & Real Estate Co. (C. C.) 69 Fed. 886; State v. Columbia George (Or.) 65 Pac. 604, 610. In and by its act of August 9, 1888, declaring that every Indian woman, member of a tribe, who shall thereafter be married to a citizen of the United States, shall "become by such marriage a citizen of the United States, with all the rights, privileges, and immunities of any such citizen," Congress expressly added that nothing in the act contained "shall impair or in any way affect the right or title of such married woman to any tribal property or interest therein."

Digitized by Google

By Act May 1, 1888, entitled "An act to ratify and confirm an agreement with the Gros Ventre, Piegan, Blood, Blackfeet, and River Crow Indians in Montana, and for other purposes," the United States, in consideration of certain cessions and relinquishments on the part of those Indians, agreed—

"To advance and expend annually for the period of ten years after the ratification of this agreement, under direction of the Secretary of the Interior, for the Indians now attached to and receiving rations at the Fort Peck agency, one hundred and sixty-five thousand dollars; for the Indians now attached to and receiving rations at the Fort Belknap agency, one hundred and fifteen thousand dollars, and for the Indians now attached to and receiving rations at the Blackfeet agency, one hundred and fifty thousand dollars, in the purchase of cows, bulls, and other stock, goods, clothing, subsistence, agricultural and mechanical implements, in providing employees, in the education of Indian children, procuring medicine and medical attendance, in the care and support of the aged, sick, and infirm, and helpless orphans of said Indians, in the erection of such new agency and school buildings, mills, and blacksmith, carpenter, and wagon shops as may be necessary, in assisting the Indians to build houses and inclose their farms, and in any other respect to promote their civilization, comfort, and improvement: Provided, that in the employment of farmers, artisans, and laborers, preference shall in all cases be given to Indians residing on the reservation who are well qualified for such positions: Provided further, that all cattle issued to said Indians for stock-raising purposes, and their progeny, shall bear the brand of the Indian Department, and shall not be sold, exchanged, or slaughtered, except by consent or order of the agent in charge, until such time as this restriction shall be removed by the Commissioner of Indian Affairs." 25 Stat. 114, c. 213, art. 3.

And article 5 of the same act is as follows:

"In order to encourage habits of industry, and reward labor, it is further understood and agreed, that in the giving out or distribution of cattle or other stock, goods, clothing, subsistence, and agricultural implements, as provided for in article 3, preference shall be given to Indians who endeavor by honest labor to support themselves, and especially to those who in good faith undertake the cultivation of the soil, or engage in pastoral pursuits, as a means of obtaining a livelihood, and the distribution of these benefits shall be made from time to time, as shall best promote the objects specified."

By article 3 of the agreement with the Indians of the Blackfeet Indian reservation in Montana, of date September 26, 1895, it was agreed:

"That in the employment of all agency and school employees, preference in all cases be given to Indians residing on the reservation, who are well qualified for such positions; and that all cattle issued to said Indians for stock-raising purposes, and their progeny, shall bear the brand of the Indian Department, and shall not be sold, exchanged, or slaughtered except by the consent of the agent in charge until such time as this restriction shall be removed by the Commissioner of Indian Affairs." Act June 10, 1896, c. 398, 29 Stat. 355.

By Act July 4, 1884, c. 180, par. 3, 23 Stat. 76, 1 Supp. Rev. St. p. 450, it was provided:

"That where Indians are in possession or control of cattle or their increase, which have been purchased by the government, such cattle shall not be sold to any person not a member of the tribe to which the owners of the cattle belong, or to any citizen of the United States, whether intermarried with the Indians or not, except with the consent, in writing, of the agent of the tribe to which the owner or possessor of the cattle belongs. And all sales made in violation of this provision shall be void, and the offending purchaser on

Digitized by Google

conviction thereof shall be fined not less than five hundred dollars, and imprisoned not less than six months."

By Act June 7, 1897, c. 3, 30 Stat. 62, 90, it is provided:

"That all children born of a marriage heretofore solemnized between a white man and an Indian woman by blood and not by adoption, where said Indian woman is at this time or was at the time of her death recognized by the tribe, shall have the same rights and privileges to the property of the tribe to which the mother belongs or belonged at the time of her death, by blood, as any other member of the tribe, and no prior act of Congress shall be construed as to debar such child of such right."

Sections 2127 and 2138 of the Revised Statutes are as follows:

"Sec. 2127. The agent of each tribe of Indians, lawfully residing in the Indian country, is authorized to sell for the benefit of such Indians any cattle, horses, or other live stock belonging to the Indians and not required for their use and subsistence, under such regulations as shall be established by the Secretary of the Interior. But no such sale shall be made so as to interfere with the execution of any order lawfully issued by the Secretary of War, connected with the movement or subsistence of troops. * * *"

"Sec. 2138. Every person who drives or removes, except by authority of an order lawfully issued by the Secretary of War, connected with the movement or subsistence of troops, any cattle, horses, or other stock from the Indian country for the purposes of trade or commerce, shall be punishable by imprisonment for not more than three years, or by a fine of not more than five thousand dollars, or both."

These agreements and statutory enactments very clearly show that cattle purchased by the government and issued to the Indians of a tribe are not theirs absolutely and unconditionally, but, as is expressly provided by law, are provided and issued for the purpose of promoting "their civilization and improvement," and to "encourage habits of industry" among them, the alienation and slaughtering of which cattle, without the consent of the government's agent in charge of the reservation, is expressly forbidden. The right and duty of the government to protect such conditional ownership of the Indians does not admit of doubt. United States v. Flournoy Live Stock & Real Estate Company (C. C.) 69 Fed. 886; Id. 71 Fed. 576; United States v. Mullin (D. C.) 71 Fed. 685; United States v. Winans (C. C.) 73 Fed. 72; Beck v. Real Estate Co., 65 Fed. 30, 12 C. C. A. 497; Truscott v. Hurlbut Land & Cattle Company, 73 Fed. 64, 19 C. C. A. 374, and cases supra.

The act conferring citizenship, with its accompanying rights, upon Indian women who marry white citizens of the United States, expressly declares, as has been seen, that nothing in the act "shall impair or in any way affect the right or title of such married woman to any tribal property or interest therein." The marriage of Josephine Hall to John Hall did not, therefore, extend her rights in the cattle in question, which remained precisely as they were before such marriage.

It is provided by a statute of Montana that:

"If personal property attached be claimed by a third person, he shall give notice thereof to the sheriff and deliver to him an affidavit stating his claim, ownership, and a description of the property, and unless the plaintiff within ten days after receiving notice thereof give the sheriff a good and sufficient bond to indemnify him against loss or damage by reason of retaining said property, the sheriff shall deliver the same to such person." Section 906, Code Civ. Proc. Mont.

Digitized by Google

And it is insisted on the part of the plaintiffs in error that, if the cattle in question were the property of Josephine Hall, the giving of the notice and the making of the affidavit provided for by this statute "is a condition precedent to Josephine Hall's right of action against the sheriff for the conversion of this property." A sufficient answer to this suggestion is that this action is brought by the United States, and that its rights in a governmental matter are not affected by state enactments. Pond et al. v. United States et al., 111 Fed. 989, 49 C. C. A. 582, and cases there cited. We need not, therefore, inquire whether or not section 906 of the Montana Code, concerning the claim and delivery of personal property, could operate to defeat an action for the conversion of such property, where no notice or demand prior to the bringing of suit is alleged or shown.

Nor did the court below err, as is contended on behalf of the plaintiffs in error, in refusing to instruct the jury that, if the cattle in question were in the possession of John Hall when they were seized, the defendant Taylor would not be liable, unless Josephine Hall had designated the cattle belonging to her, and demanded their return, with which demand the sheriff refused to comply. It appears from the evidence, as has been said, that, notwithstanding her marriage to John Hall, Josephine Hall continued to actually reside on the reservation, and received from the government its regular issues of cattle and rations, along with the other Indians of the tribe. It further appears that prior to her receipt of any cattle from the government her father gave her three head, her uncle one, and her brothers four, making eight head in all, and that in the years 1895 and 1896 eleven head were issued to her by the government, and in 1901 seven head more. Rule 360 of the Regulations of the Indian Office provides as follows:

"When cattle are issued to Indians, either for work oxen or for breeding purposes, each animal must be branded, in addition to the I. D. brand, with a private mark to indicate the person to whom it is issued. A record of such private marks must be kept in the agency office. The agent is also required to see that the increase of all issued cattle is similarly branded." Regulations of the Indian Office, 1894, p. 76.

All of the cattle issued to Josephine Hall were, in accordance with the foregoing regulations of the Indian Department, branded with the letters "I. D." (indicating "Indian Department"), and it appears that a private brand, "B. E.," signifying "Beaver Eyes" (the Indian name of Josephine Hall), was selected by the agent of the reservation for her, and also placed upon the cattle issued to her. It further appears that in the year 1897 Josephine Hall purchased from one Gardiner a brand called the "Y. G." brand, and from that time on her cattle and the increase thereof were branded with the I. D. and the Y. G. brands. John Hall, it appears, was the owner of a brand spoken of in the record as the "Reel" brand, consisting of a cross with a "T" on each end of it; and he, also, had some cattle with his brand running on the reservation. It appears from the evidence that in making the levy the deputies of the defendant sheriff entered upon the reservation and there rounded up cattle that were herding together, including the cattle of Jose-

Digitized by Google

phine Hall, as well as some of John Hall. They also levied upon 19 head at the place of one Prendergast, most of which were branded with the I. D. and Y. G. brands, which had been driven there by John Hall en route to Browning for shipment to Chicago, provided (according to John Hall's testimony) a permit could be obtained from the Indian agent at Browning consenting to the shipment of Mrs. Hall's cattle. The evidence, however, is that Mrs. Hall did not authorize her husband to sell her cattle, and did not know that he had driven any of them away, for the purpose of shipment or otherwise.

The obvious duty of an officer in executing a writ of attachment is, as held by this court in St. Paul, etc., Railway Company v. Drake, 44 U. S. App. 271, 276, 72 Fed. 945, 19 C. C. A. 252, to levy upon property of the defendant to the writ, and not upon the property of somebody else. He has, as was said by the Supreme Court in Buck v. Colbath, 3 Wall. 334, 343, 18 L. Ed. 257—

"A very large and important field for the exercise of his judgment and discretion, first, in ascertaining that the property on which he proposes to levy is the property of the person against whom the writ is directed; secondly, that it is property which by law is subject to be taken under the writ; and, thirdly, as to the quantity of such property necessary to be seized in the case in hand. In all these particulars he is bound to exercise his own judgment, and is legally responsible to any person for the consequences of any error or mistake in its exercise to his prejudice. He is so liable to plaintiff, to defendant, or to any third person whom his erroneous action in the premises may injure."

Even if it be conceded that the different brands upon these cattle were not of themselves enough to put the officer upon inquiry as to their ownership, it appears from the testimony of the deputy sheriff who made the levy that he had sufficient knowledge of a controversy to put him upon inquiry as to the ownership; his testimony upon redirect examination being:

"I was directed specifically and positively to take all the Y. G. cattle. Those were Mrs. Hall's cattle, or considered as hers in the neighborhood, from rumor."

The doctrine relating to "confusion of goods," relied on by counsel for the plaintiffs in error, has no application to cattle and horses, and things of a similar nature, that may be readily identified. The Idaho, 93 U. S. 575, 23 L. Ed. 978; Claflin v. Beaver (C. C.) 55 Fed. 576; Carlton v. Davis, 8 Allen (Mass.) 94; Moore v. Bowman, 47 N. H. 494, 502; Capron v. Porter, 43 Conn. 383; Brown v. Bacon, 63 Tex. 595; Drake on Attachment (7th Ed.) § 199.

In the course of the trial the defendant McKnight testified, in effect, that prior to the commencement of his action against John Hall he went to the ranch of the latter for the purpose of collecting his note, and that Hall there said to him, "I have got the cattle all rounded up and intend to ship them to Chicago from Baltic in a few days," but that he (McKnight) replied that it would be more satisfactory to him for Hall to settle the note before he shipped the cattle; that Hall said:

"All right; I will come in and square this. I will pay you this as I can get the money from Kingsbury and Davies."

Digitized by Google

An objection and motion to strike this testimony out having been made, the court said:

"Do you expect to prove that he had these cattle and owned them? If so, you must prove it by something more than John Hall's declaration."

To which counsel for the defendants responded:

"We do, and we expect to offer to prove by this witness that John Hall was the owner of the cattle whose conversion is now being sued for; that he was in possession of them, and about to ship them to Chicago, and while exercising acts of ownership and control over these very cattle he offered to mortgage them to McKnight to secure his debt to him, or, if McKnight would wait until he shipped them to Chicago, he would turn over the proceeds of the sale of them to McKnight, and stated to McKnight that the cattle were his. This offer of proof is made for the purpose of showing that the cattle belonged to John Hall, and also for the purpose of impeaching Hall as a witness. (Motion to strike [out] granted, and offer of proof denied by the court. The defendants excepted.)"

It is insisted on the part of the plaintiffs in error that such declarations of John Hall in respect to the ownership of the cattle were admissible. We do not think so. Conceding, but without holding, that the declarations of one in possession of personal property, in respect to the character of such possession, are admissible in evidence against strangers on the issue of ownership, yet an insuperable objection to the proposed declarations in the present case is that they were not made at a time when they could be properly regarded as a part of the res gestæ. Mutual Life Insurance Company v. Logan, 87 Fed. 637, 645, 31 C. C. A. 172; Mack v. Porter, 72 Fed. 236, 242, 18 C. C. A. 527; Crawford v. Crawford (Kan. Sup.) 55 Pac. 842; Low v. Schaffer (Or.) 33 Pac. 679; Alexander v. Jennings, 78 Tenn. 419; Coxe v. Milbrath, 110 Wis. 499, 86 N. W. 174; 1 Greenleaf on Evidence, § 110; Wharton on Evidence, § 259; 24 A. & E. Encyc. of Law (2d Ed.) p. 691.

It is further contended on the part of the plaintiffs in error that the court below erred in sustaining objections to questions to Josephine Hall by which it was sought to show that she had told the defendant McKnight in 1897 that the cattle issued to her by the government had been taken by people to whom she was indebted, and in sustaining like objections to a question put to the witness McKnight. The ruling of the court below was right. These cattle, like the personal property spoken of by the Supreme Court in United States v. Rickert, 188 U. S. 432, 443, 23 Sup. Ct. 478, 483, 47 L. Ed. 532, were purchased with the money of the government and were furnished to the Indians "to induce them to adopt the habits of civilized life. It was, in fact, the property of the United States, and was put into the hands of the Indians to be used in execution of the purpose of the government in reference to them." It is not pretended that the government ever consented to a disposition of the cattle by Josephine Hall, and it is plain that no declaration of hers could affect its right and duty to protect her.

It is also urged on behalf of the plaintiffs in error that the court below improperly permitted John Hall to give in evidence a conversation he had with the deputies of the defendant sheriff. Hall,

Digitized by Google

having testified that he had a conversation with them in respect to some of the cattle that they had levied upon and had in charge, was asked:

"What was said?"

To which he was permitted to answer, over the objection and exception of the defendants, as follows:

"A. I rode up to them. They had that little bunch of cattle and was driving them off. The undersheriff of Mr. Taylor said: 'We are coming to get the rest of them.' I said: 'What are you going to do with them?' 'Why,' he says, 'we will sell them, I reckon, when we get around to it.' There must have been twenty head of I. D. cattle in that bunch."

The record proceeds:

"Q. Did you at that time say anything about the I. D. cattle that were in the bunch? (Objected to as leading, and as incompetent, irrelevant, and immaterial. Objection overruled. Defendants excepted.) A. I said: 'What are you going to do with the I. D. cattle?' He said: 'I don't know what they are going to do with them. Our orders are to take everything with the Y. G. brand on them, even if it had the I. D. on it.'"

Even if it be conceded that this testimony was improperly admitted, it was immaterial, for it in no way tended to prove the ownership of the cattle. It may be added, however, that declarations of an officer in making a levy, in connection with the performance of his acts, are admissible. 1 Wharton on Evidence, §§ 262, 264; 1 Greenleaf on Evidence, § 108; Steamboat Company v. Brockett, 121 U. S. 637, 7 Sup. Ct. 1039, 30 L. Ed. 1049.

In the cross-examination of John Hall, and of the deputy sheriff, Gaines, both of whom were witnesses for the plaintiff, the counsel for the defendants sought to show that the cattle of Josephine Hall and John Hall were intermingled, and that neither Hall nor his wife ever pointed out to the officer the cattle belonging to Mrs. Hall; the defendants contending that, under the circumstances, the officer could not become liable without being notified by or on the part of Mrs. Hall of her ownership. The record shows, on the redirect examination of John Hall, the following proceedings:

"Q. Now, you say, when you met the deputy sheriffs there on the reservation with the cattle, that they knew that they were Y. G. and I. D. cattle, and that they belonged to your wife. How do you know that? (Objected to as incompetent, irrelevant, and immaterial. Objection overruled. Exception noted.) A. One of the deputies lives right there close to me. You might say he seen the cattle right along. He knew them as well as I did; knew what the brand was."

And on the redirect and recross-examination of the witness Gaines the following proceedings:

"Redirect examination: I also knew that the Y. G.'s was hers; but, irrespective of that, I was ordered to bring all of the Y. G. cattle with the I. D. brand on.

"Recross-examination: As to whether I knew that brand was hers, it was simply hearsay, and the general talk round about there. It is general repute and hearsay. I didn't see it recorded at all.

"(Counsel for defendants moved to strike out all of the testimony of this witness as to what he heard about the Y. G. brand being Josephine Hall's, because the same is hearsay, and incompetent, and not the proper way to prove ownership of a brand. Motion denied. Defendants excepted.)"

Digitized by Google

We think the testimony was admissible, not, as a matter of course, for the purpose of proving title, but as going to show that the officer was put upon inquiry as to the true ownership of the cattle in question.

Section 1082 of the Code of Civil Procedure of Montana provides that:

"If the jury are permitted to separate either during the trial or after the case is submitted to them, they shall be admonished by the court that it is their duty not to converse with or suffer themselves to be addressed by any other person on any subject of the trial, and that it is their duty not to form or express an opinion thereon until the case is finally submitted to them."

And it is contended on the part of the plaintiffs in error that by virtue of this state statute, and of the provisions of section 914 of the Revised Statutes of the United States [U. S. Comp. St. 1901, p. 684], providing that the practice, pleadings, and forms and modes of proceeding in civil causes, other than equity and admiralty causes, in the Circuit and District Courts, shall conform, as near as may be, to the practice, pleadings, and forms and modes of proceeding in like causes in the courts of record of the state within which said Circuit or District Courts are held, the court below committed reversible error in allowing the jury to separate on one occasion during the trial without giving this statutory admonition. The record shows that twice upon the first day of the trial of the case, to wit, upon taking a recess at noon, and again upon the adjournment of the court for the day, the court below did duly admonish the jury in accordance with the provisions of the state statute cited. Upon taking the noon recess on the second day of the trial, the court neglected to give the admonition, to which, however, no exception was taken by the counsel for the defendants until the reassembling of the court at the afternoon session. Had the attention of the court been called to its omission in the matter by counsel, no doubt the admonition would have been given; and counsel's failure to note an exception at the time precludes their availing themselves of the omission, even if there were any merit in the contention; but the clear and explicit admonition given by the court below to the jury on two previous occasions was a substantial compliance with the statute, as has been frequently held. Gleason v. Strauss, 5 Kan. App. 80, 48 Pac. 881; Perkins v. Ermel, 2 Kan. 325; Kirby v. W. U. Tel. Co. (S. D.) 55 N. W. 759, 30 L. R. A. 612, 621, 46 Am. St. Rep. 776; Musselman v. Pratt, 44 Ind. 126; People v. Coyne, 116 Cal. 295, 48 Pac. 218; People v. Colmere, 23 Cal. 632.

During the trial of the cause, John Hall having testified that the papers in the attachment suit against him were served by one Link Hummell, after which the witness said something about going to a place called Dupuyer and settling the matter with McKnight, the following proceedings occurred:

"Q. Isn't it a fact that you went to Dupuyer with Link Hummell and during the night you left Dupuyer, went out where the cattle were, took possession of them again, and, instead of continuing on towards Baltic with them, you reversed the course in which you were taking them at the time of the attachment, and took them over to Slim Prendergast's place and secreted them

Digitized by Google

from the sheriff? By Mr. Rasch: Object to that as incompetent, irrelevant, and immaterial. By the Court: There is a great deal of this that is meant to create a feeling in this matter. Now, what effect would that have? By Mr. McConnell: We are attempting to show that these cattle belonged to John Hall, and that he exercised ownership and control over them. By the Court: No; you are attempting to show that this man did something wrong, and committed a theft. That's what you are."

And upon the conclusion of the instructions to the jury, to which counsel for the defendants entered a number of exceptions, as they had the undoubted right to do, these proceedings occurred:

"By the Court: There is one other thing I will state to the jury. (To Mr. McConnell) You may take an exception to this, too. I have not much patience with an attorney who comes into court and attempts to cast reproach upon some one who is here of a different race, which may be called an inferior race. There are people all over the country, that have Indian blood in their veins, that are respectable people. The present mayor of Chicago has Indian blood in his veins. Your Lieutenant Governor of Montana is a mixed-blood Indian, and his mother is a respectable woman. By Mr. McConnell: To those remarks of the court, may it please the court, we desire to enter an exception on behalf of the defendants. I have not attempted to cast any reproach upon an Indian. My criticisms were devoted exclusively to John Hall, who stated he was a white man, and your honor's remarks are highly prejudicial to the defendants' cause."

We have no means of verifying the assertion of counsel for the defendant in error that these remarks of the court were provoked by the argument of counsel for the plaintiffs in error. They were improper, and are much to be regretted. Nevertheless, as we are of the opinion that the instructions of the court properly stated to the jury the law, and covered the case presented, and as we are of the further opinion that a verdict in favor of the plaintiffs in error could not have been properly rendered in view of the evidence in the case, the improper remarks complained of could not have resulted in substantial injury.

The judgment is affirmed.

(130 Fed. 670.)

PRATT v. BOTHE.

(Circuit Court of Appeals, Sixth Circuit. June 29, 1904.)

No. 1,283.

1. BANKRUPTCY—CLAIMS OF ATTORNEYS—ALLOWANCE.

Bankr. Act July 1, 1898, c. 541, § 60d, 30 Stat. 562 [U. S. Comp. St. 1901, p. 3446], provides that if a debtor shall, directly or indirectly, in contemplation of bankruptcy, pay money or transfer property to an attorney, solicitor in equity, or proctor in admiralty, for services to be rendered, the transaction shall be examined by the court on petition of the trustee for creditors, and shall only be valid to the extent of a reasonable amount, to be determined by the court, and the excess may be recovered by the trustee for the benefit of the estate. Section 64b, 30 Stat. 563 [U. S. Comp. St. 1901, p. 3447], provides for an allowance for attorney's services rendered to the bankrupt in assisting him while performing the duties imposed by the act. *Held*, that section 60d was limited to the allowance of reasonable compensation to attorneys for services rendered to the bankrupt prior to the commencement of the bankruptcy proceedings, and did not cover services rendered in resisting the creditor's petition for an adjudication of bankruptcy.

Digitized by Google

Appeal from the District Court of the United States for the Eastern District of Michigan.

This is an appeal from an order made by the District Court in a proceeding in a bankruptcy case wherein Flora B. Hawley had been adjudicated a bankrupt, which order denied a petition of the appellant praying that the trustee be directed to pay the petitioner, out of the moneys in his hands belonging to the estate of the bankrupt, the balance claimed to be due to him for services as an attorney and counselor at law rendered to the bankrupt, and for disbursements made for her while in such professional service. A schedule stating the items of the account was appended to the petition, consisting of:

Disbursements, made up of items of traveling expenses, telegrams, and the like, from February 13 to April 28, 1903, amounting to..	$ 35 97
Charges for services rendered by Pratt to Hawley, commencing with December 6, 1902, down to and including May 14, 1903, amounting to	765 00
Services of George P. Cobb, of counsel for Hawley in the bankruptcy proceedings	100 00
And services of Henry Weber and A. R. Miller for making estimate of the value of the buildings on the real estate belonging to Hawley, and their attendance to testify as to the same.....	50 00
Making a total of	$950 97
Upon which there are credits amounting to.....	150 00
Leaving a balance due Pratt of.....	$800 97

The petition for an adjudication of bankruptcy was filed January 28, 1903. It appears from the appellant's petition and proofs that the charges were incurred by the bankrupt during a period extending from somewhat less than 2 months before the petition of the creditors was filed until 3½ months thereafter.

The bankrupt had been engaged in business as a merchant at Bay City, Mich., for several years and had become embarrassed and unable to meet her obligations. On the 6th of December, 1902, she consulted the appellant, to advise her as to what course she had best pursue. Further consultations ensued, and on January 12, 1903, she paid the appellant $50 in part payment for his services, and, to secure him for the balance of his services, gave him a mortgage on her stock of merchandise, conditioned for the payment of $200 on the 27th day of January, 1903, and further that she would "well and truly pay or cause to be paid to the second party at maturity all such other sums in which the said first party may become indebted to said second party for his services hereafter rendered and disbursements and expenses paid, or otherwise, and also for any other indebtedness that may be incurred to other counsel employed by said second party in connection with said first party's affairs." On the same day she executed another mortgage on the same property to one Jeffery, as trustee, to secure all her creditors; the amount of her indebtedness being then estimated at $13,000, but which eventually proved to be as much as $15,500. Apparently both these mortgages were given upon the suggestion of the appellant. The appellant, as he claims, made an agreement with Mrs. Hawley that, in case her creditors should acquiesce in the mortgage to Jeffery, his fee should be the sum of $250, but that, in case they instituted bankruptcy proceedings, he should have such further compensation as might be reasonable for his services and expenses. The creditors did not acquiesce in the mortgage to Jeffery, but on January 28th filed their petition for an adjudication of bankruptcy against Mrs. Hawley, as above stated; the ground thereof being that the giving of the mortgages above mentioned constituted acts of bankruptcy. The appellant and Mr. Cobb, whom he employed to assist him, defended Mrs. Hawley; and a protracted trial before a jury was had, which resulted in a finding against her. This was followed by an adjudication of bankruptcy on May 9, 1903. On June 8th the appellant filed with the referee his petition for the allowance of the claim now in controversy. It was opposed by the trustee, not, as we infer from the record before us, upon the

Digitized by Google

ground that the charges were unreasonable of themselves, but upon the ground that the claim was not, in law, allowable. The referee allowed a charge of $37.50 for services in preparing the schedules required to be filed by the bankrupt, and certified the case to the District Judge for his instruction as to the other charges included in the claim of the petitioner. The amount of the claim for services rendered before the filing of the petition by creditors was the sum of $241.75, and the appellant admitted that he had been paid the sum of $150, $90 of which was paid February 2, 1903, after the filing of the creditor's petition. The balance claimed by him on that portion of his whole claim was therefore $91.75. The District Judge, in response to the questions certified by the referee, gave his opinion (1) that the $37.50 for preparing the bankrupt's schedules was properly allowed; (2) that the petition should, in respect of all other charges of the appellant, be disallowed; (3) but that the balance of $91.75 for services rendered before the filing of the petition of creditors might be allowed as an ordinary debt of the bankrupt upon the surrender of the $150, which was, as the court held, an unlawful preference. An order to this effect having been entered, the petitioner has appealed. He has also, out of caution, brought the case up by petition for revision. As there is no controversy in respect to any question of fact upon the case as presented to us, it matters little which method of procedure is recognized. We incline to the view, however, that the case is properly before us on the appeal (Cunningham v. German Ins. Bank, 103 Fed. 932, 43 C. C. A. 377), and will consider and determine it upon that footing.

Frank S. Pratt, in pro. per.
Graves, Hatch, Millis & Goodenough, for appellant.
Lee E. Joslyn, for appellee.

Before LURTON, SEVERENS, and RICHARDS, Circuit Judges.

SEVERENS, Circuit Judge, having made the preceding statement of the case, delivered the opinion of the court.

The contention of the appellant is that his whole claim, to the extent that it has not been paid, should be allowed as a charge upon the fund in the hands of the trustee, and should be paid before distribution to general creditors. He founds his claim upon the provision of section 60d of the bankruptcy act of July 1, 1898, c. 541, 30 Stat. 562 [U. S. Comp. St. 1901, p. 3446], which reads as follows:

"If a debtor shall directly or indirectly, in contemplation of the filing of a petition by or against him, pay money or transfer property to an attorney and counselor at law, solicitor in equity, or proctor in admiralty for services to be rendered, the transaction shall be examined by the court on petition of the trustee or any creditors and shall only be valid to the extent of a reasonable amount to be determined by the court and the excess may be recovered by the trustee for the benefit of the estate."

The construction which the appellant thinks should be imposed upon this paragraph is that it validates any such payment or transfer for services to be rendered to the debtor, whether to be rendered before or after a petition in bankruptcy is filed against him, and whether or not he is adjudged a bankrupt, subject only to the determination of the court as to whether the amount paid or transferred is reasonable. For the trustee, on the other hand, it is contended that it has relation only to services which may be rendered to the debtor prior to the institution of bankruptcy proceedings against the debtor, upon which he shall have been adjudged a bankrupt. It must be admitted that the language of this provision of the act is obscure. And the

Digitized by Google

bankruptcy courts have found difficulty in settling its meaning. But the direct question of its proper interpretation has not been presented in more than a very few cases. Perhaps it was most distinctly presented and considered in the case In re Kross (D. C.) 96 Fed. 816, which was followed by Judge Swan in the case before us. Judge Brown, then District Judge of the Southern District of New York, there held that this provision should be construed in connection with section 64b, 30 Stat. 563 [U. S. Comp. St. 1901, p. 3447], and should be limited thereby, in respect to the services rendered to the bankrupt after the filing of the petition against him, to such services as are contemplated by section 64b; that is to say, services rendered to the bankrupt in assisting him while performing the duties imposed upon him by the act. And upon this construction it was held that it was immaterial whether they had been contracted and paid for before the bankruptcy, or the compensation thereafter determined by the court, without any contract by the debtor before the petition was filed against him. In either case it would be a preferred claim, to be ascertained and fixed by the court. This would seem a plausible conclusion, were it not for the language of the paragraph, which includes services rendered not only by an attorney, but those rendered by a "solicitor in equity or a proctor in admiralty." This generalization seems to indicate that the services contemplated were such as might be required in general litigation or in the course of the debtor's business, and one cannot help greatly doubting whether Congress had in mind the purpose to include those special services which an attorney would render to the bankrupt while in the discharge of his duties, payment for which was provided by another section of the act. It would rather seem that Congress, engaged, as many signs indicate, in guarding the assets of those in contemplation of bankruptcy, to the end that they might be brought without unnecessary expenditure to the hands of the trustee for distribution to creditors, while it would not deny to the debtor the right to employ and pay for legal assistance in his affairs during that critical period, yet proposed a restraint upon that privilege by requiring that such payment should be reasonable in amount—in short, proposed to apply to the incipient stage of bankruptcy the provident economy which it sought to apply to the administration of the bankrupt estate. It may have been thought that there was the same reason for such restraint at that stage of affairs as subsequently. And it is to be observed that the transaction would not become the subject of revision unless bankruptcy ensued. It put attorneys, solicitors, and proctors in no worse position than it did some other classes of those having business with the debtor.

The bankruptcy act makes a final and sharply determined line in respect of the power of the bankrupt over his estate and the distribution of it as of the date of the filing of the petition against him. From that time his assets are in gremio legis, and he cannot, unless he compounds with his creditors, bind his assets. He may, of course, make new contracts and incur new obligations, but they are not chargeable to the funds which have become vested in the trustee until they have subserved the purpose of the bankruptcy proceedings,

Digitized by Google

when, if anything remains, he reacquires it. It would be wholly inconsistent with the scheme of the act that a debtor in contemplation of bankruptcy should be permitted to make an arrangement whereby he should have power, after his assets shall have gone into the hands of the trustee, to alter their disposition by appropriating them to the payment for services thereafter rendered to him, or, indeed, to satisfy the obligations of any executory contract. With respect to services rendered to the bankrupt in the present case after the creditor's petition was filed, it is to be observed that the compensation therefor was not due and owing at the date of the filing of the creditor's petition, and so was not a provable claim. It would be anomalous that the debtor, by preconcert with his attorney, could defeat that provision by an agreement for a benefit to accrue to the bankrupt after the proceedings should be inaugurated, and make the compensation therefor a privileged claim. By section 64b, the law provides for compensation to an attorney who assists the bankrupt in performing the duties imposed upon him. But this is done for the purpose of facilitating the proceedings, and for the benefit of the estate. It is not done in recognition of any contract obligation of the bankrupt. Many cases have been cited to us—mostly cases arising upon the last preceding act—in which the bankruptcy courts have given some countenance to the appellant's contention that the debtor may employ counsel to resist the petition of his creditors for an order adjudging him a bankrupt, and charge his assets with the payment thereof, and in one case that doctrine seems to have been quite pointedly held. In re Comstock, 6 Fed. Cas. 239, No. 3,074. The idea which pervades the allowance of such a charge seems to have been grounded upon a disposition to be merciful to the debtor, who, it is said, has given up all his property, and is without other means of repelling an unjust prosecution. But it is by no means a new thing—indeed, it is a situation constantly recurring—where a man, whether by his fault or his misfortune, is without means to make full defense of his property rights. It is unfortunate often, but it has never been thought that property belonging to others, or which might be adjudged to them, should be drawn upon to enable the man to make defense. Many cases are cited which more or less oppugn the doctrine of such decisions as In re Comstock, supra. It is not practicable within any reasonable limits to review and compare the cases upon this subject, and, so far as we are not concluded by positive authority, we shall deal with the questions involved on fundamental reasons. We are of opinion that section 60d relates to services to be rendered while the debtor is "in contemplation of bankruptcy," and not to services to be rendered after bankruptcy proceedings are commenced. The reasonableness of the amount paid or transferred for such services is to be determined by the court. This view would lead to the conclusion that the court, if the trustee or any creditor should require it, should have reviewed the transaction, and exercised its judgment upon the question as to what amount would be a reasonable sum to be allowed. No such request was made in this case, and, as matters stood, the question was to what extent the charges for services, and the expenses rendered in connection with them, had

Digitized by Google

been paid. If any balance was found in favor of the petitioner, that sum should have been allowed him; otherwise the petition should have been disallowed. In the case of Randolph v. Scruggs, 190 U. S. 533, 23 Sup. Ct. 710, 47 L. Ed. 1165, it was held, in response to questions certified by this court, that compensation might be made to attorneys for preparing an assignment for the benefit of creditors which the debtor had made prior to the proceedings in bankruptcy, but that it would not be provable as a preferential claim. It was also held that charges for counseling the assignee in the discharge of his duties under the assignment might be allowed in so far as they were beneficial to the estate. But the right to the claim of preference was founded upon the right of the assignee to be reimbursed for expenses reasonably incurred by him on account of the assignment and the protection of the property. And this claim of the assignee inured to the attorney to whom it would ultimately go. But there are no such facts in the present record. It is not shown that any services were rendered to the assignee, or that he became obligated therefor. All the services were rendered to the debtor, and were charged to him. The bulk of the charges making up the claim of the appellant was for services rendered and expenses incurred in resisting the creditor's petition for an adjudication of bankruptcy. The act does not expressly provide for payment for such services out of the assets, and there is no ground which we can discover for thinking an implication to that effect should be recognized. But we are relieved from discussion of this subject by the opinion of the Supreme Court in Randolph v. Scruggs, supra, wherein it was certified that a claim for such a service was not allowable. Expenses incurred in the same service would stand upon the same footing, and are subject to the same disposition. The District Court recognized as valid the item of $37.50 for making out the bankrupt's schedules, and allowed it. We are therefore not concerned with it on this appeal. Since the argument of this case the appellant has sent in a reference to a recent decision of the Supreme Court of Pennsylvania (Furth v. Stahl, 205 Pa. 439, 55 Atl. 29), in which that court considered the provision of the bankrupt act upon which the appellant here relies, and reached the conclusion that an agreement of this kind was valid thereunder. If, as we infer, the services for which the claim was there made were rendered before the proceedings in bankruptcy were commenced, the opinion of the court is in accord with our own conclusions. If we are wrong in our inference in respect of the fact, we could not assent to the result there reached. Upon the construction which we think should be given to section 60d, there having been no petition of the trustee or any creditor that the court should inquire into the reasonableness of the amount of the compensation agreed to be paid by the debtor, we think the claim of the petitioner for charges incurred before the commencement of the bankruptcy proceedings should have been allowed at the sum of $241.75, less the sum of $150 admitted to have been paid, which would leave a balance of $91.75. This, of course, does not include the $37.50 allowed by the judge under section 64b. As the rights of the parties are governed by the spe-

Digitized by Google

cial provision of the statute relating to the subject, no question of preference by reason of the payments arises.

The order of the court below from which this appeal was taken must be reversed, with directions to enter an order in conformity with this opinion. As each party succeeds in part, the costs of the appeal will be divided between them. The petition for review will be dismissed at the cost of the petitioner.

(130 Fed. 676.)

INGRAHAM v. NATIONAL SALT CO.

(Circuit Court of Appeals, Second Circuit. April 6, 1904.)

No. 152.

1. CORPORATIONS—VALIDITY OF CONTRACTS—IMPEACHMENT OF CERTIFICATES OF INDEBTEDNESS.

   A corporation having charter power to purchase the stock of other corporations bought the stock of another corporation, and in part payment therefor issued stock of its own, both common and preferred, which was deposited in trust with the stock purchased. It also issued to the sellers, through the trust company, certificates of indebtedness, payable in semiannual installments for five years. The agreement also provided that all dividends declared on the stock of the purchasing company should be paid to the trust company and applied in payment of the certificates until their full payment, after which the stock was to be delivered and the trust terminated. *Held*, that such certificates were not ultra vires, having been issued for one of the purposes for which the corporation was organized, and in the exercise of its implied power to incur indebtedness for such purpose, and that the corporation could not assert their invalidity on the ground that they were in effect, and were intended to be, a guaranty to the holders of a fixed dividend on their stock for a term of five years.

2. CONTRACTS—LEGALITY—ANTI-TRUST LAW.

   It is no objection to the enforcement of a contract, in the consideration and enforcement of which nothing illegal inheres, that it may incidentally aid one of the parties in evading or violating the anti-trust statute.

In Error to the Circuit Court of the United States for the Eastern District of New York.

See 122 Fed. 40.

Joseph A. Burr, for plaintiff in error.

H. B. Twombly, for defendant in error.

Before WALLACE, LACOMBE, and TOWNSEND, Circuit Judges.

WALLACE, Circuit Judge. This is a writ of error by the plaintiff in the court below, brought to review a judgment for the defendant. The assignments of error challenge the rulings of the trial judge in withdrawing the case from the consideration of the jury and directing a verdict for the defendant.

The action was brought to recover the amount of 12 obligations, termed "certificates of indebtedness," created by the defendant, and countersigned and registered by the American Trust Company, evidencing the promise of the defendant to pay to the payee or order a

Digitized by Google

specified sum of money in certain equal semiannual installments. These certificates are substitutes for 12 purchased by the plaintiff in the spring of 1901, and which he surrendered to the American Trust Company for the purposes of registry, and were received by him in exchange for those surrendered.

The answer of the defendant is a voluminous document which is rather in the nature of a bill in equity than of any pleading known to a court of law. Two defenses can be spelled out of it. The first is that the certificates (the originals) are invalid because they were made as part of an agreement which the defendant was without corporate power to make, viz., as a cover for an agreement by the defendant to guaranty dividends upon certain shares of its preferred and common capital stock, and thereby give the holders of these shares an unauthorized preference over the other stockholders of the defendant. The second defense is that they were made on an illegal consideration, viz., to effect a scheme contravening the law of the state of Ohio declaring unlawful certain combinations in restraint of trade.

The action has been before this court upon a previous writ of error which was brought by the defendant in the court below to review a judgment for the plaintiff. The court was then of the opinion that the facts established the first defense, and that, although the plaintiff was a purchaser of the certificates for value, he took them subject to any infirmities which would have invalidated them in the hands of the original holders. We are satisfied that our decision was erroneous, and are glad to have an opportunity to correct it while the consequences are yet remediable.

Succinctly stated, the certificates originated as follows: The defendant, a New Jersey corporation organized to carry on the manufacture of salt, and having power, among other things, "to purchase, hold, sell, assign, mortgage, pledge, or otherwise dispose of, shares of the capital stock * * * of any corporation of the state of New Jersey or of any other state," decided to acquire the capital stock of the United Salt Company, a corporation of Ohio. Accordingly, in 1889, the defendant made an agreement with certain shareholders of the United Salt Company whereby they were to sell their shares to the defendant, and the defendant was to pay for each of their shares 1¼ shares of its preferred stock and 1¼ shares of its common stock, and also a money consideration of $106.25 in 10 equal semiannual installments. This money consideration was equivalent to annual dividends for five years upon each share and a quarter of preferred stock of 7 per cent. per share ($43.75), and upon each share and a quarter of common stock of 10 per cent. per share ($62.50). The agreement provided that all the shares to be exchanged, those of the United Salt Company as well as those of the National Salt Company, should be deposited with the American Trust Company until the money consideration should be fully paid; that in the meantime all dividends declared upon the preferred and common stock of the National Salt Company thus deposited should be paid by the defendant to the American Trust Company; that the dividends so paid should apply as payments pro tanto of the money

Digitized by Google

consideration; that the defendant should make its certificates of indebtedness for the money consideration, and the same should be issued by the American Trust Company to the stockholders of the United Salt Company, or their assignees, in the amount due to them respectively; and that when the certificates were fully paid the trust should terminate, and the deposited stock be delivered to its owners. It further provided that, in case of failure of the defendant to pay the certificates according to their terms, the American Trust Company should sell the deposited shares of the United Salt Company, apply the proceeds to the payment of the certificates, and pay any surplus to the defendant. Pursuant to the agreement, the shares to be exchanged were deposited with the trustee, and the certificates of indebtedness were made by the defendant and issued by the trustee. The agreement thus referred to consisted of several documents, some executed by the shareholders of the United Salt Company, some executed by the defendant, and some executed by the American Trust Company, and which were intended to embody together the complete agreement.

The contention of the defendant in respect to this agreement is found in that part of its answer which avers as follows:

"That, whereas said alleged agreements in writing provided for the cash payment of $106.25 per share for each share of the capital stock of the United Salt Company, and the issuing of certificates of indebtedness to the respective holders, in accordance with their holdings, to evidence the same, said provision for cash payment was in fact a mere subterfuge, and the real agreement was that the said the National Salt Company should make a guaranty of 7 per cent. upon the preferred stock and 10 per cent. upon the common stock, to the stockholders of the United Salt Company, upon the stock of the National Salt Company to be exchanged for the stock of the United Salt Company; that said guaranty extends over a period of five years, and until the sum of $106.25 per share has been paid; that thereby the stock which would be given by the National Salt Company to the stockholders of the United Salt Company was and is given a preference over and above the stock held by any of the other stockholders of said National Salt Company; that said guaranty of said dividends by the National Salt Company upon the stock exchanged by the stockholders of the United Salt Company was without power on the part of the said National Salt Company to make, and was therefore void and of no effect."

It will be observed that it is not contended by the defendant that the agreement was made without the consent of the majority of its stockholders, or without compliance in any other respect with the requisite formal proceedings to sanction the corporate act in making it. The defense rests solely upon the theory that the agreement was ultra vires.

It is plain that the agreement resulted in setting apart the deposited National Salt Company stock until the certificates should be paid, and denuding it in the meantime of the right to receive any dividends which might accrue upon it, and in appropriating such dividends to the payment of the certificates. The real question in the case is whether the agreement was ultra vires in the sense that it could not be made without the unanimous consent of the stockholders of the defendant. The only evidence of the intention of the parties to it is found in the agreement itself. Whether it was made as a cover or "subterfuge" for some other agreement

Digitized by Google

which would have been ultra vires is merely an academic question. If it was not ultra vires, it was one which the defendant could lawfully make, and the defendant's motive in making it could not affect the legal quality of the act. The doctrine that after the shares have been distributed, and the relations of corporation and stockholders have been fixed, the corporation cannot, in the absence of authority in its charter or articles of association, create shares which carry a preferred right to dividends, or a right to a fixed payment in lieu of dividends, without the unanimous consent of its stockholders, has been asserted by the authorities, and rests upon undoubted principle. The same principle would forbid the corporation to create a new class of stockholders having rights or privileges not common to all. The reason is that to permit this would impair the existing equality among the stockholders, and subvert the vested rights which every stockholder acquires upon the purchase of his shares. But these rights are not invaded by the exercise of any power which resides in the corporation by virtue of its charter or the law of its organization, because every stockholder assents in advance to the exercise of such powers. The stockholder also assents in advance to the exercise by the corporation of all the incidental powers necessary to carry into effect the express objects of its charter or articles of association, and these include all that are reasonable and adapted to the end in view. Thus, the power to borrow money is implied as incidental to the defined powers of ordinary private business corporations; and if, in order to borrow money, the corporation finds it expedient to create preferred stock, and the issue is not in excess of the authorized capitalization of the corporation, no stockholder has reason to complain. The adjudged cases have not always recognized the force of this original consent by stockholders to the exertion of the incidental powers of the corporation. In Kent v. Quicksilver Mining Company, 78 N. Y. 159, the court assumed that, if the preference stock had been created as an exertion of the incidental power of borrowing money, it would have been a valid act, notwithstanding the absence of unanimous consent by the stockholders. This proposition is consistent with good sense, because the power to borrow includes the authority to mortgage the corporate property as a security, in the absence of some restriction in the charter; and the creation of preferred shares in place of common shares is no more harmful to the rights and interests of existing stockholders than is the creation of a mortgage. 2 Redfield on Railways, § 237; Westchester R. Co. v. Jackson, 77 Pa. 321. If the defendant, in order to attain one of the authorized objects of its incorporation, the purchase of the shares of another corporation, had found it expedient to agree with the vendors that the shares of common stock which they were to receive in exchange should carry 10 per cent. annual dividends for five years, to be paid out of the general dividend fund before appropriating any of it to the payment of dividends upon the rest of the common stock, we are not prepared to say that the agreement would not have been valid, as to all the stockholders of the defendant, as an exercise of one of the incidental powers to which all had

Digitized by Google

originally consented. Such a contract would have been valid if it had been an act which was directly and immediately appropriate to the exercise of the specific power granted. For much learning upon this subject, the well-known case of Curtis v. Leavitt, 15 N. Y. 9, may be profitably consulted.

The present agreement did not have the effect of creating any new preferred stock or guarantying dividends upon the new stock. The stock to be transferred to the new holders was the existing preferred and common stock of the corporation, and the certificates were independent negotiable securities, which might or might not be transferred with the stock. If the new holders should remain the owners of the certificates, they would become creditors as well as stockholders of the defendant; if they should choose to dispose of the certificates and retain their stock, they would be stockholders on precisely the same footing as all the other preferred and common stockholders of the corporation. If they were willing to forego dividends for a longer or shorter period, that was no concern of the other stockholders. Certainly that feature of the agreement worked the latter no harm or wrong. The defendant was expressly authorized to purchase the stock of other corporations, and, as incidental to such a purchase, it had authority to contract to pay for the stock in such mode and upon such conditions as were deemed advantageous. It did agree to pay for the purchased stock, partly in its own stock and partly in money, and to issue its obligations for the payment of the money at such times as were mutually satisfactory to the vendors and itself. It doubtless expected that the dividends which would accrue upon its stock deposited with the trustee would meet these payments, and so did the vendors; but there was no agreement to that effect. The promise contained in the certificates may have been regarded by both as substantially equivalent to such an agreement; but, assuming this to be so, so long as it was not the agreement, and could not be enforced, it is quite immaterial what were the expectations which prompted it. It not infrequently happens that the same substantial results can be effected by proper means or by means which the law will not sanction. If the present case affords an instance, it is also one where the legitimate means were used. Because the defendant was careful not to make any contract which would be obnoxious to any of the rules of the law of corporations, it seeks to evade the contract by asserting that it was intended as a substitute for one which it could not properly make. This position is without any other merit than its consistency with the conduct of the defendant in skulking behind a factitious wrong to stockholders in order to repudiate the contract while it retains the fruits.

Whether the purchase by the defendant of the shares of the United Salt Company was made to effect a combination of the two corporations in order to prevent competition in the salt trade, and, if so, whether the stockholders of the Ohio corporation were participes criminis or merely actuated by the motive of selling their shares advantageously, are inquiries which need not be pursued. The evidence in the present record does not throw any light upon

Digitized by Google

them, the case having been decided in the court below in favor of the defendant, upon the first defense, conformably with the views which this court had expressed. It is proper, however, to observe that it is no objection to the enforcement of a contract, in the consideration and performance of which nothing illegal inheres, that it may incidentally aid one of the parties in evading or violating a statute. Hanover National Bank v. First National Bank, 109 Fed. 421, 48 C. C. A. 482.

The judgment is reversed.

(132 Fed. 1006.)

McCABE v. AMERICAN WOOLEN CO.

(Circuit Court of Appeals, First Circuit. November 3, 1904.)

No. 532.

1. NEGLIGENCE—PLACES ATTRACTIVE TO CHILDREN—CANAL—RAILINGS.
   Maintenance of an unguarded canal, having precipitous banks, through a thickly settled portion of a town, to conduct water to defendant's mills, was not, on the allegations of the declaration in this case, such negligence as to sustain a recovery for the death of a child five years of age, who fell into the canal and was drowned.

In Error to the Circuit Court of the United States for the District of Massachusetts.

Action for wrongful death of child. Defendant demurred to the declaration and answered without waiving his demurrer. Plaintiff demurred to the answer. From a decision sustaining defendant's demurrer and awarding him judgment for costs this writ of error is taken.

The opinion filed below, and here reprinted from 124 Fed. 283, was in full as follows:

PUTNAM, Circuit Judge. This case is based on statutes of Massachusetts which are now represented by section 2, c. 171, p. 1544, of the Revised Laws of Massachusetts of 1902, as follows:

"If a person or corporation by his or its negligence, or by the gross negligence of his or its agents or servants while engaged in his or its business, causes the death of a person who is in the exercise of due care and not in his or its employment or service, he or it shall be liable in damages in the sum of not less than five hundred nor more than five thousand dollars, to be assessed with reference to the degree of his or its culpability or of that of its agents or servants, to be recovered in an action of tort, commenced within one year after the injury which caused the death, by the executor or administrator of the deceased, one-half thereof to the use of the widow and one-half to the use of the children of the deceased; or, if there are no children, the whole to the use of the widow; or, if there is no widow, the whole to the use of the next of kin."

It was decided in the Circuit Court of Appeals for this Circuit, in Boston & Maine Railroad v. Hurd, 108 Fed. 116, 47 C. C. A. 615, 56 L. R. A. 193, that the statutes of Massachusetts of this character

¶ 1. See Negligence, vol. 37, Cent. Dig. §§ 47, 55, 56.

Digitized by Google

are remedial, furnishing a remedy at civil law, so that the federal courts have jurisdiction under them.

Patrick F. McCabe was a minor at the date to which the pleadings in this case related. He was then a resident of Blackstone, in the county of Worcester. The declaration alleges as follows:

"That defendant is a corporation organized under the laws of the state of New Jersey, and a citizen of said state of New Jersey; that the defendant, on the 28th day of May, A. D. 1902, and for a long time prior thereto, was the owner of a certain tract of land, lying in said Blackstone, near the Blackstone river, which land was intersected by streets and highways, and around and near which ran streets and highways, and upon which the defendant maintained numerous dwelling houses, which it rented to many persons and families; that said land is situated in a populous portion of said town, and closely adjoining said land were many other dwelling houses occupied by many other persons and families, in one of which last-mentioned houses said deceased dwelt on said date, and had dwelt for a long time theretofore; and that many of the said persons so occupying the said dwelling houses of the defendant and the said other dwelling houses were children of tender years, as the defendant well knew, or by the exercise of due diligence might have known.

"And the plaintiff further says that upon and in said land of the defendant the defendant on said date, and for a long time theretofore, maintained an artificial canal or mill trench, the water to supply which was taken from said Blackstone river at a point above said land of the defendant, and flowed thence through and across said land, and across St. Paul street, so called, one of the highways above mentioned, in close proximity to said dwelling houses and to the house in which said deceased lived; that at the upper part of said canal or mill trench and near the place of the fatality hereinafter set forth, the defendant maintained headgates, so called, through and under which the water in said canal flowed; that below said headgates, at the place where said fatality occurred, the banks of said canal or mill trench were steep and precipitous, and the water therein was deep and flowed with a swift current, by reason of all of which said canal or mill trench was dangerous to children who might be upon or near the banks thereof, as the defendant well knew, or by the use of due diligence might have known.

"And the plaintiff further says that, because of the location and character of said canal or mill trench, it was an object attractive and enticing to children, and constituted an allurement, inducement, and invitation to children to frequent the banks thereof for the purpose of amusement and play, and that the said children dwelling in the defendant's said houses and in the said other houses in the vicinity were in the habit of frequenting said banks for the purpose of amusement and play, all of which the defendant well knew, or by the use of due diligence might have known.

"And the plaintiff further says that by reason of the premises it became and was the duty of the defendant to maintain about and upon said canal or mill trench proper fences, coverings, or other safeguards to prevent children so frequenting said banks, or being thereon as a result of the defendant's said allurement, inducement, and invitation, from reaching the water in said canal or mill trench, and so to keep them from the danger of injury or death by falling into said canal; but that the defendant, wholly neglecting its said duty, negligently and carelessly failed to provide any such fences, coverings, or other safeguards, and permitted its said canal or mill trench to remain and be unfenced, unguarded, uncovered, and open, so that children from the defendant's said dwelling houses and from the said other dwelling houses in the vicinity could freely pass onto and across said land to said canal or mill trench, both directly from the defendant's said dwelling houses and from the said streets and highways which intersect and lie about said land.

"And the plaintiff further says that on said 28th day of May, A. D. 1902, said Patrick F. McCabe was a child of tender years, to wit, of the age of

Digitized by Google

five years, and, being allured, enticed, attracted, and invited to said canal or mill trench as aforesaid, was, by reason of the said negligence of the defendant, upon the bank of said canal or mill trench, near said headgates, engaged in play, and while there, by reason of said negligence of the defendant, the said Patrick F. McCabe, while in the exercise of due care, fell into said canal or mill trench and was drowned."

The defendant demurred to the declaration, and also answered it, not waiving the demurrer. The plaintiff demurred to the answer. By agreement of parties the case was heard on both demurrers; it being stipulated that each party should have the benefit of his demurrer notwithstanding the condition of the pleadings in other respects, and that both demurrers should be heard and disposed of by the court. We will consider first the demurrer of the defendant, because, if that is sustained, it will not be necessary to go further.

The plaintiff relies on Railroad Company v. Stout, 17 Wall. 657, 21 L. Ed. 745, and Union Pacific Railway v. McDonald, 152 U. S. 262, 14 Sup. Ct. 619, 38 L. Ed. 434. The latter case reaffirms Railroad Company v. Stout; but it may as well be laid out of the way, because it is difficult to determine whether it was adjudged on the authority of Railroad Company v. Stout or on the old rule with reference to pitfalls and other dangerous traps. The "burning slack" complained of in Railway v. McDonald was, indeed, an unguarded pitfall of a concealed, dangerous, and most reprehensible character. The opinion is a very long one, and it is not to be presumed that it received throughout the concurrence of all the Justices of the Supreme Court, or even of a majority of them. It falls within that class of opinions as to which what is not absolutely necessary to the conclusion must be regarded as dicta. For these reasons, we need not consider it further.

Railroad Company v. Stout has been expressly repudiated by the Supreme Judicial Court of Massachusetts in Daniels v. New York & New England Railroad Company, 154 Mass. 349, 28 N. E. 283, 13 L. R. A. 248, 26 Am. St. Rep. 253. It has also been repudiated in New Hampshire, and it is doubtful whether it is regarded as law in any part of New England. However, we need not discuss the question whether we are bound by Daniels v. New York & New England Railroad Company, because that case is easily distinguishable from Railroad Company v. Stout. There is no doubt that Railroad Company v. Stout recognizes that the law requires certain care and caution with reference to children of tender age, even when they are trespassers, which would not be required with regard to adults; so that the result of that case would not have been as it was except for that distinction. What was there complained of was a turntable, which the opinion, at page 662, 17 Wall., and page 748, 21 L. Ed., says several boys had been at play upon "on other occasions," meaning other previous occasions, "and within the observation and the knowledge of the employés" of the defendant corporation. Also, on the same page, it refers to "the remoteness of the machine from inhabited dwellings." In the case at bar the canal in which the deceased was drowned was in the immediate neighborhood of inhabited dwellings, and apparently in the neighborhood of the place where his parents resided. The opinion in Railroad Company v. Stout does not di-

Digitized by Google

rectly affirm that this remoteness of the turntable was of consequence; but it states it, and the statement of it leads to one suggestion which essentially distinguishes Railroad Company v. Stout from the case at bar, to which we will refer again. Further, on the same page, the opinion points out that the turntable was out of repair. It says that there was on it "a heavy catch, which, by dropping into a socket, prevented the revolution of the table." It also says: "It was proved to have been usual with railroad companies to have upon their turntables a latch or bolt, or some similar instrument." This catch weighed some eight or ten pounds, and had been broken off and not replaced. The plaintiff was injured by the revolving of the table, which the opinion says "could probably have been prevented by the repair of the broken latch." In view of these facts, the opinion continues to the effect that the jury might have "reached the conclusion that the defendant had omitted the care and attention it ought to have given, that it was negligent, and that its negligence caused the injury to the plaintiff." The opinion further observes: "The evidence is not strong, and the negligence is slight; but we are not able to say that there is not evidence sufficient to justify the verdict." All this leaves the inference that the case turned on the facts that the jury found that the corporation was negligent in not keeping in repair what it was usual to have on turntables of the kind in question, and that the injury would not have happened except for this negligence. In the present case, there is no allegation that it is usual to guard banks of either natural or artificial streams under the circumstances stated. Therefore, in two respects this case differs from Railroad Company v. Stout, namely: There is nothing to suggest that it was the duty of the defendant here to maintain a guard, or that it undertook to maintain one, and failed to keep it in proper order.

In another and more important particular the case differs from Railroad Company v. Stout. We refer to what is suggested by the fact that the turntable there in question was remote from inhabited dwellings. In this connection we might undertake to sift out the various decisions, but it would be useless to attempt it. They present a great many phases, some of them going so far as to leave the impression that they were controlled less by regard to the rules of law than by sympathy for the sufferings of children and the inability of their natural guardians to care for them. The cases are fully grouped in Thompson on Negligence (1901) § 1024 et seq. While some of them hold the owners of real estate liable for unguarded pools of water, and unguarded "deep reservoirs", into which children have fallen while at play, yet there is certainly nothing in any decision among them of an authoritative nature, or in the principles which they properly develop, which requires us to go so far as the plaintiff demands in the present case. Railroad Company v. Stout and Union Pacific Railway v. McDonald both relate to something which was temporary, not entirely open to observation, and unexpected, and consequently of such a character that the proprietor of the land on which it was situated could not justly anticipate that the parents would be continuously cautioned against it, and thus advised to protect children from injury thereby. The case at bar, however, is es-

Digitized by Google

sentially distinct in this particular. This canal was permanent, open, and plain to view, as much so as though it had been a natural stream, and suggests nothing whatever which would change the relations of the parties from what they would have been had it been a brook or a river. If the defendant is to be holden to this plaintiff for not especially guarding it, then the customs of the community must be changed throughout, because it is impossible to distinguish this canal, for the purpose of this case, from a river or a brook, a hay mow, an ox cart left in a farmer's yard, a high ledge, or a field trench, about either of which children may happen to be accustomed to play. We think, therefore, that this canal was an object of such a character that, both from the reason of the thing and the customs of the community, the defendant was entitled to assume that the plaintiff's natural guardians would protect him from any dangers attached thereto, as they easily could and ought to have done. Therefore, on account of the various distinctions which we have pointed out, and the reasons which we have stated, this suit cannot be maintained.

We have said that the defendant filed an answer, and that that answer was demurred to; but, as already suggested, we do not deem it necessary to enter into a full discussion of the questions thus raised. The answer sets up in substance the defense which was sustained by the Supreme Judicial Court of Massachusetts in Grant v. City of Fitchburg, 160 Mass. 15, 35 N. E. 84, 39 Am. St. Rep. 449, to the effect that the parents of the child allowed it to remain unattended. The statute on which this suit is based in this respect is the same as the statute under consideration in Grant v. City of Fitchburg, which was also, like this at bar, an action for the death of a child of tender age against the city of Fitchburg. The court, however, held that the inattention of the parents was a defense to the suit, independently of the question whether or not the defendant was negligent. The inattention in that case was not of a more serious character than that alleged at bar, and is, therefore, in truth a determination by the highest local tribunal of the effect to be given to the expression "due care," found in the statute now under consideration. According to numerous decisions of the Supreme Court, Grant v. City of Fitchburg is, therefore, probably conclusive on us. However, we rest the case where it would stand independently thereof.

The demurrer of the defendant is sustained, the declaration is adjudged insufficient in law, and the defendant is to have judgment, with costs.

James H. Rickard, Jr., for plaintiff.
Whipple, Sears & Ogden, for defendant.

Before COLT, Circuit Judge, and ALDRICH and BROWN, District Judges.

PER CURIAM. We agree with the reasoning and conclusion of the Circuit Court, and upon the grounds set forth in the opinion of that court its judgment is affirmed. The judgment of the Circuit Court is affirmed, and the defendant in error recovers its costs of appeal.

Digitized by Google

(130 Fed. 884.)

CHICAGO TERMINAL TRANSFER R. CO. v. BOMBERGER.

(Circuit Court of Appeals, Seventh Circuit. May 10, 1904.)

No. 1,058.

1. ERROR—ASSIGNMENTS OF ERROR.
An assignment of error that the verdict is contrary to law is too general to be considered.

2. SAME—SETTING OUT WRIT FOR DELAY—DAMAGES ON AFFIRMANCE.
Where it is apparent, from the fact that the record presents no question for decision by the appellate court, that a writ of error was sued out for delay, the Circuit Court of Appeals will award damages on affirmance, as authorized by rule 28 (90 Fed. cxix, 31 C. C. A. cxix).

In Error to the Circuit Court of the United States for the District of Indiana.

Jesse B. Barton and John B. Peterson, for plaintiff in error.
Robert W. McBride, for defendant in error.

Before JENKINS and GROSSCUP, Circuit Judges, and BUNN, District Judge.

PER CURIAM. This is a writ of error to review a judgment in an action for personal injuries. The errors assigned are nine in number. The 1st, 2d, 3d, 5th, 6th, 7th, 8th, and 9th assignments challenge the action of the court below upon several grounds, and are dependent upon the evidence submitted at the trial, but that evidence is not preserved by any bill of exception, and therefore they cannot be considered. The fourth assignment, that the verdict of the jury is contrary to law, is altogether too general, and nothing preserved in the record enables us to consider it.

The writ of error, as we cannot but think, was sued out for purposes of delay. It is not otherwise conceivable that the writ of error should be sued out, when the plaintiff in error must have known that no question could, upon the record, be presented to the court for its decision. We are not disposed to encourage frivolous appeals. It is a case calling for the application of the second paragraph of rule 28 (90 Fed. cxix, 31 C. C. A. cxix), and the judgment is affirmed, with 10 per cent. damages upon the amount of the judgment, in addition to interest. Affirmed.

¶ 2. See Costs, vol. 13, Cent. Dig. §§ 983, 986, 987.

Digitized by Google

(130 Fed. 801.)

GUARANTY TRUST CO. OF NEW YORK v. NORTH CHICAGO ST. R. CO.

KOHN et al. v. NORTH CHICAGO ST. R. CO. et al.

(Circuit Court of Appeals, Seventh Circuit. April 16, 1904.)

No. 1,037.

1. FEDERAL AND STATE COURTS—PRIORITY OF JURISDICTION—ENJOINING SUIT IN STATE COURT.

The pendency in a federal court of a creditors' suit against a street railroad company, for which a receiver has been appointed, but whose road is being operated under a 99-year lease, by a receiver of the lessee appointed by the same court in another creditors' suit against such lessee, does not exclude the jurisdiction of a state court to entertain a suit by stockholders to enjoin the delivery of an amended lease which has been agreed to by the company's directors, extending the term for a long period at a greatly reduced rental, and releasing stocks deposited in trust by the lessee to secure its performance, on the ground that such extension is ultra vires, and was obtained by the lessee by secretly and fraudulently securing control of the board of directors, and also to enjoin the lessee from voting certain stock for the ratification of such lease, since such suit does not interfere with the possession of the property by the federal court, nor with the receivers in its management, nor affect any issue which can be adjudicated under the pleadings in the creditors' suit; and the federal court is without jurisdiction to enjoin the prosecution of such suit on petition filed in the creditors' suit by the company defendant.

2. CREDITORS' SUITS—ADMINISTRATION OF PROPERTY—POWERS OF COURT.

While a court which has obtained possession of street railroad property through receivers appointed in separate creditors' suits against the lessor and lessee of such property has power to settle differences between the lessor and lessee when arising in the administration of the two estates, it has no power to compel the lessor to execute a new lease extending the term from 99 to 984 years, and materially reducing the rental during such long term; its custody of the property being temporary only, for the purpose of conserving it, if not sold, until creditors are paid.

3. FEDERAL COURTS—STAYING SUIT IN STATE COURT.

The fact that a bill filed in a state court incidentally prays for relief which, if granted, might interfere with the constructive possession of property by receivers of a federal court, does not authorize the latter court to enjoin the prosecution of the suit, where the principal relief sought therein does not trench upon its jurisdiction.

Appeal from the Circuit Court of the United States for the Northern District of Illinois.

Prior to June 1, 1899, the North Chicago Street Railroad Company and the West Chicago Street Railroad Company (herein called, respectively, the North Chicago Company and the West Chicago Company) operated independent systems of surface street railroads on the North and West Sides, respectively, of the city of Chicago. On June 1, 1899, each of those companies executed a lease to the Chicago Union Traction Company (herein called the Union Traction Company) demising its property and franchises to that company for the full period of the charter of the respective lessors, and all extensions or renewals thereof. By the terms of these leases the Union Traction Company agreed to pay or renew all notes, bonds, and mortgages of the lessor companies, and to pay as rental to the lessors, respectively, amounts equivalent to annual dividends of 12 per cent. on the stock of the North Chicago Company, and of 6 per cent. on the stock of the West Chicago Company; such payments to be made quarterly. The lease further provided that, for the purpose of securing the

¶ 1. Enjoining proceedings in state court, see notes to Garner v. Second Nat. Bank, 16 C. C. A. 90; Central Trust Co. v. Granthum, 27 C. C. A. 575.

Digitized by Google

performance of the obligations of the lease, the Traction Company should deposit with the Illinois Trust & Savings Bank of Chicago, as trustee, such amount of cash or security as should be agreed upon by the parties, which fund should be held subject to the conditions of a tripartite agreement of even date between the three parties, by which agreement the sum of $10,000,000 in cash, or in securities of a kind and amount to be approved by the two railroad companies, was provided to be deposited; the income of the fund to be paid to the Traction Company until default in some one obligation of the lease, and upon default the income from the deposit, and so much of the principal as may be necessary, to be appropriated and applied in equal and ratable payment and discharge of the debts and obligations assumed by the Traction Company. In the event that stocks of corporations should constitute part of the deposit, the trustee should vote the same in accordance with the directions of the Traction Company, and, upon request, execute a proxy to vote such stock to such person as should be designated from time to time by the Traction Company. Under that agreement there were deposited 20,000 shares of the capital stock of the North Chicago Company and 32,000 shares of the capital stock of the West Chicago Company, which shares are now held by the trustee for the purposes of the agreement. The Union Traction Company entered into possession under the leases, and, until the receiverships hereafter mentioned, operated the roads of the two lessor companies.

On April 22, 1903, the Guaranty Trust Company of New York brought three suits in the court below—one against the North Chicago Company upon three demand notes, dated, respectively, March 20, April 17, and April 20, 1903, for the amount in the aggregate of $563,000; one against the West Chicago Company upon three demand notes, one dated March 20, and two dated April 14, 1903, for the amount, in the aggregate, of $270,000; and the third against the Union Traction Company upon a demand note dated March 20, 1903, for $317,000. The notes upon which the North and West Chicago Companies were sued evidenced indebtedness which by the leases the Union Traction Company had assumed to pay or renew. Judgments by confession were entered in those suits on that day. Thereafter, on the same day, the Guaranty Trust Company filed its three separate judgment creditors' bills in the court below against the three judgment debtors, respectively, containing the usual allegations of a creditors' bill, reciting the public nature of the business carried on by the company defendant therein, describing the various actual or potential controversies alleged to exist with respect to the various franchises of the several companies, and praying for the appointment of a receiver, and, in the case of the Union Traction Company, praying for administrative relief by way of operation of the railways. In each case the judgment debtor was sole defendant. Upon the same day the three companies filed their answers to the respective bills, confessing the bills, and on the same day the court below appointed receivers in each of the suits, with authority to operate the property under the order of the court. The receivers forthwith qualified and assumed possession of the property so leased to, and in the custody of, the Union Traction Company. Following the appointment of the receivers, various petitions were filed by them, setting forth in detail the various interests and rental charges to which the various defendants were subject, and reciting various controversial questions relating to the public service, public rights, and public liabilities with various corporations. No diverse parties were brought into court by these petitions, and no relief sought therein, other than the instructions of the court with respect to the administration of the property. During the receiverships the court authorized the payment of rental accruing under the various leases, and its distribution among the stockholders, respectively, of the North and West Chicago Companies, as dividends. In this way $265,722 on July 15 and October 15, 1903, were paid to the stockholders of the North Chicago Company, and $374,587.50 on May 15 and October 15, 1903, were paid to the stockholders of the West Chicago Company; these payments being made with the consent of the judgment creditor, the complainant in those bills, a part of which payment was made by the receivers of the Union Traction Company by means of a loan made by them under the authority of the court.

On August 15, 1903, David A. Kohn and certain others of the appellants here, as stockholders of the North Chicago Company, filed in the state circuit

Digitized by Google

court of Cook county, Ill., their bill in their own behalf, and in behalf of all other stockholders of that company, against the Union Traction Company, the North Chicago Company, the Illinois Trust & Savings Bank, and certain other individual defendants, setting forth the incorporation, charter, and capitalization of the several companies named, the holdings by complainants of stock in the North Chicago Company, the ownership of the road, and the leases hereinbefore stated; that the indebtedness of the North Chicago Company at the date of the lease was $2,319,000, evidenced by notes then outstanding which the Traction Company, by the lease, assumed and agreed to pay or renew; the indebtedness of the West Chicago Company, at the date of the leases, of $1,090,000, evidenced by the notes which the Traction Company had agreed to pay or renew; alleged the deposit of securities under the tripartite agreement, the execution of the notes to the Guaranty Trust Company, as stated, and the three judgments entered thereupon—and charges that each of the three suits was begun and the judgments entered pursuant to an agreement theretofore entered into between the Guaranty Trust Company and the Union Traction Company that the proceedings should be had; that the notes upon which the judgments were entered were renewal notes executed at the request of the Union Traction Company, being indebtedness outstanding at the time the respective leases were executed, and the failure of the Traction Company to hold the railroad companies harmless therefrom; alleges the insolvency of the Union Traction Company, that it was subject to be dissolved under the laws of the state of Illinois, and that judicial proceedings had already been commenced for that purpose. The bill further alleges that since the execution of the leases the officers and directors of the North and West Chicago Companies have been designated and selected by the Union Traction Company, and that until July 23, 1903, all the directors and officers of both railroad companies were officers or persons in the service of the Union Traction Company; that at a meeting of the directors of the North Chicago and West Chicago Companies on July 23, 1903, each of the directors—one at a time, resigned—the meeting being controlled by the officers of the Union Traction Company, and a new board of the companies was elected by the remaining directors, who proceeded to elect a president; that the proceedings were secret, without prior notice of the holding of the meeting to any stockholder of either company, and that no stockholder voted, except as some of the directors may have been stockholders, and to an amount not constituting a substantial minority of the shares of stock in either company; that a majority of the officers and directors so elected were not and are not stockholders in either company, but are stockholders or in the service of the Union Traction Company, and were selected by that company, prior to their election, to serve the interests of the Traction Company. The bill then charges that, at the request and direction of the officers and attorneys of the Union Traction Company, the directors of the North Chicago and West Chicago Companies adopted a resolution authorizing the execution to the Union Traction Company of a new lease and tripartite agreement, subject to the approval of the holders of a majority of the stock of the North Chicago and West Chicago Railroad Companies, at a stockholders' meeting to be called for that purpose, and that such amendatory agreement be executed and deposited in escrow, to be delivered to the Traction Company when approved by a majority of the stockholders of each of said companies, which special meeting was called for August 18, 1903. By this amended agreement the stocks on deposit with the Illinois Trust & Savings Bank of Chicago, as trustee under the tripartite agreement of June 1, 1899, continued to be held upon certain trusts declared in the new proposed agreement; and it is charged, with respect to the 20,000 shares of North Chicago Company stock so held, and worth $2,000,000, and the 32,000 shares of West Chicago Company stock so held, and now worth $1,600,000, which under the former leases the lessors had the right to apply toward the payment of their claim against the Union Traction Company, that by the new agreement these rights are waived; that by the proposed amendatory lease the demised property was granted during the full term of 984 years, the rental was reduced in the case of the North Chicago Company from 12 per cent. upon the capital stock to 6 per cent., and in the case of the West Chicago Company from 6 per cent. to 4 per cent., and other changes were made, stated in the bill. The bill prayed that the shares of stock so de-

Digitized by Google

posited with the Illinois Trust & Savings Bank might be subjected to the payment of the amount due to the North Chicago Company by the Traction Company, and that the latter company might be enjoined from voting such stock, or directing how it should be voted, upon the question of adopting the proposed amendatory agreements, and that the trustee and the North and West Chicago Companies, respectively, might be enjoined from voting or permitting the shares of stock to be voted; that a receiver be appointed of such stock, "subject, however, to said rights, if any, which it may appear that any persons or receivers may rightfully have therein"; that the custodian be restrained from delivering the amendatory agreement; that the parties be restrained from modifying or changing the lease, upon the ground that the proposed leases were ultra vires the North and West Chicago Companies, respectively. On the same day the North Chicago Company filed its petition in this suit, praying the court for an injunction restraining the parties complainant and their solicitors, the appellants here, from any interference, both with the meeting so proposed to be held, and from obtaining any writ of injunction from any other court to that end, in which petition the receivers joined. And upon that day the court below entered a restraining order and order to show cause why a temporary injunction should not issue as prayed for. The matter was continued from time to time until October 9, 1903, when the court below entered an order directing that the restraining order of August 15, 1903, be continued, and "made a permanent order of injunction, to prohibit and prohibiting each and every of the respondents, according to its terms, until the final decree of the court upon a full hearing of said petition." The order so continued in force is as follows:

"It is ordered that the said respondents mentioned in said petitions, D. A. Kohn, James J. Townsend, Thomas A. Moran, Levy Mayer, Isaac H. Mayer, Carl Meyer, W. J. Buckley, and Simon Straus, and all other stockholders of the said defendant company, their attorneys, solicitors, agents, representatives, and servants, be, and they hereby are, restrained, until the hearing of the motion for the temporary injunction upon notice as hereinafter mentioned, and until the further order of this court, from in any way interfering with or preventing any other stockholder or stockholders of defendant company, or their proxy or proxies, from voting at the special meeting of the stockholders of defendant company referred to in said petitions, called by said defendant company to be held on the 18th day of August, 1903, at 2 o'clock p. m., or on such other day, if any, as may be appointed for an adjourned meeting by the stockholders attending, pursuant to such call, on the question of the approval or disapproval of each of said amendatory agreements in said petitions referred to, or from preventing or interfering with such defendant company in holding such meeting, or in permitting at such meeting each stockholder of record of said defendant company, present in person or by proxy, to vote upon the question of the approval or disapproval of each of said amendatory agreements, or in certifying the result of such vote to this court under its corporate seal, as contemplated and provided in and by the order of this court entered herein on July 28, 1903, and particularly from instituting or commencing, prosecuting, or carrying on any suits or proceedings in any other court, or from suing out or enforcing any writs of injunction from any other court, to prevent or interfere with any stockholder or stockholders of this defendant company, or his or their proxy or proxies, from or in voting at said meeting so to be held on the 18th day of August, 1903, or on such other day, if any, as may be appointed for an adjourned meeting by the stockholders attending, pursuant to the call of such meeting, upon the question of the approval or disapproval of said amendatory agreements, or either of them, or to enjoin or restrain this defendant from holding said meeting, or from permitting each stockholder of record of said defendant company, present in person or by proxy, to vote at such meeting upon the question of the approval or disapproval of each of said amendatory agreements, and certifying the result of such vote to this court under its corporate seal; and that they also be in like manner restrained from in any way interfering with the proper conduct of such meeting, or the vote of any stockholder or stockholders, or their authorized proxy or proxies, at such meeting, or with the conduct of such meeting as prescribed and directed by the said order of this court above mentioned, or with the carrying out or into

Digitized by Google

effect of any vote or action taken by said stockholders at said meeting, including the delivery of said amendatory agreements, if so approved, and that the hearing of the said motion for a temporary injunction be, and the same is hereby, set down for Monday, August 17, 1903, at 10:30 o'clock a. m."

On July 28, 1903, petitions were filed in the three creditors' suits by the respective corporations defendants, setting forth the proposed modifications of the leases as herein stated, and praying that the receivers might be instructed to join in such modification and to execute the new agreements; and on the same day the receivers filed their petitions, stating the filing of the petitions by the respective defendants, and asking for instructions. No persons were made parties to those petitions, nor was any process issued thereon; but on August 14, 1903, upon the petition of the receivers of the Union Traction Company, the court authorized the receivers to direct the issuance of proxies to vote the stock held by the trustee to the persons who had been selected by the Union Traction Company.

Under these circumstances the stockholders' meeting was held on August 18, 1903, and the action of the boards of directors of the several companies ratified and confirmed; and the court below on the same day directed the receivers to approve of and join in the execution of the new leases and new tripartite agreement.

From the order of October 9, 1903, this appeal is taken.

Levy Mayer and Thomas A. Moran, for appellants.

John S. Miller and Charles H. Aldrich, for appellees.

Before JENKINS and BAKER, Circuit Judges, and BUNN, District Judge.

JENKINS, Circuit Judge (after stating the facts as above). The rule is axiomatic that the courts of the United States should not interfere with proceedings in the courts of the state, except so far as may be necessary to assert and protect a rightful jurisdiction. The rule is emphasized by the provisions of a statute as old as the judicial system of the United States: "The writ of injunction shall not be granted by any court of the United States to stay proceedings in any court of a state, except in cases where such injunction may be authorized by any law relating to proceedings in bankruptcy." Rev. St. § 720 [U. S. Comp. St. 1901, p. 581]. The rule is reciprocally recognized and generally observed by both state and federal courts, because it is essential to the maintenance of harmony and indispensable to the orderly administration of justice. The rule has been declared and its limitations established by the ultimate tribunal, and is so well recognized by the profession that but for the importance of the case under consideration, and the earnest controversy of counsel with respect to the rule, we should deem a reference to the authorities unnecessary. We need not now review the numerous decisions which have led up to the final settlement of the rule, but a brief reference to some of them may not be out of place.

In Freeman v. Howe, 24 How. 450, 16 L. Ed. 749, it was ruled that property held by a marshal under a writ from a federal court could not lawfully be taken from his possession by a proceeding issuing from a state court; and this upon the ground that the possession of the marshal was the possession of the court, and that no other court with merely concurrent authority could be allowed to disturb that possession. In Buck v. Colbath, 3 Wall. 334, 18 L. Ed. 257, where under similar circumstances the marshal was sued in trespass for taking the goods,

Digitized by Google

it was held that the action did not come within the principle of Freeman v. Howe, because the action did not seek to interfere with the possession of the property taken. As the officer must determine for himself whether the property which he proposes to seize is legally liable to be taken, he is not protected by his writ if he takes property belonging to others than the defendant in the writ, and may be sued therefor in another court of competent jurisdiction. Recognizing the rule that the tribunal which has obtained jurisdiction of a case has exclusive right to decide every question arising in the case, the court states that the rule is subject to limitations, and is confined to suits between the same parties or privies, seeking the same relief or remedy, and to such questions or propositions as arise ordinarily and properly in the progress of the suit first brought, and does not extend to all matters which may by possibility become involved in it.

In Moran v. Sturges, 154 U. S. 256, 14 Sup. Ct. 1019, 38 L. Ed. 981, the court reviews the various decisions, affirming the principle declared in Buck v. Colbath, and seems to approve the principle that "courts, for the purpose of protecting their jurisdiction over persons and subject-matter, may enjoin parties who are amenable to their process and subject to their jurisdiction from interference with them in respect of property in their possession, or identical controversies therein pending, by subsequent proceedings as to the same parties and subject-matter in other courts of concurrent jurisdiction," and also approves of a remark by Mr. Justice Miller in Buck v. Colbath, that:

> "It is not true that a court, having obtained jurisdiction of a subject-matter of a suit, and of parties before it, thereby excludes all other courts from the right to adjudicate upon other matters having a very close connection with those before the first court, and in some instances requiring the decision of the same questions exactly. In examining into the exclusive character of the jurisdiction of such cases, we must have regard to the nature of the remedies, the character of the relief sought, and the identity of the parties in the different suits."

In Moran v. Sturges the court sustains the exclusive jurisdiction of the United States District Court in admiralty over the subject-matter, and that the proceeding in the state court was an unlawful interference with the proceedings in the admiralty.

In re Chetwood, 165 U. S. 443, 17 Sup. Ct. 385, 41 L. Ed. 782, the general principle stated is reaffirmed and declared to be firmly established.

In Central National Bank v. Stevens, 169 U. S. 432, 18 Sup. Ct. 403, 42 L. Ed. 807, the court reviews the various cases bearing upon the subject and reaffirms the rule.

In Farmers' Loan & Trust Company v. Lake Street Elevated Railroad Company, 177 U. S. 51, 20 Sup. Ct. 564, 44 L. Ed. 667, the principle is thus declared:

> "The possession of the res vests the court which has first acquired jurisdiction with the power to hear and determine all controversies relating thereto, and, for the time being, disables other courts of co-ordinate jurisdiction from exercising a like power. This rule is not restricted in its application to cases where property has been actually seized under judicial process before a second suit is instituted in another court, but it often applies as well where suits are brought to enforce liens against specific property, to marshal assets, administer trusts, or liquidate insolvent estates, and in suits of a similar nature."

Digitized by Google

We have had occasion not infrequently to speak to this rule, following, as we thought, the pronouncement of the ultimate tribunal with respect to its scope and limitations. Central Trust Co. v. Grantham, 83 Fed. 540, 27 C. C. A. 570; Leathe v. Thomas, 97 Fed. 136, 38 C. C. A. 75; Baltimore & Ohio Railroad Company v. Wabash Railroad Company, 119 Fed. 678, 57 C. C. A. 322; McDowell v. McCormick, 121 Fed. 61, 57 C. C. A. 401; Woods v. Root, Secretary of War, 123 Fed. 402, 59 C. C. A. 206; Copeland v. Bruning, 127 Fed. 550, 63 C. C. A. 435.

In Baltimore & Ohio Railroad Company v. Wabash Railroad Company we stated the rule to be as follows:

"It is settled that, when a state court and a court of the United States may each take jurisdiction of a matter, the tribunal whose jurisdiction first attaches holds it, to the exclusion of the other, until its duty is fully performed, and the jurisdiction involved is exhausted. Harkrader v. Wadley, 172 U. S. 148, 19 Sup. Ct. 119, 43 L. Ed. 399; Farmers' Loan & Trust Co. v. Lake Street El. R. Co., 177 U. S. 51, 20 Sup. Ct. 564, 44 L. Ed. 667. We have followed this rule, declaring 'that the court which first obtains possession of the res or of the controversy, by priority in the service of its process, acquires exclusive jurisdiction for all the purposes of a complete adjudication.' 505,000 Feet of Lumber, 24 U. S. App. 509, 517, 12 C. C. A. 628, 65 Fed. 236. The rule is not only one of comity, to prevent unseemly conflicts between courts whose jurisdiction embraces the same subject and persons, but, between state courts and those of the United States, it is something more. 'It is a principle of right and law, and therefore of necessity. It leaves nothing to discretion or mere convenience.' Covell v. Heyman, 111 U. S. 176, 4 Sup. Ct. 355, 28 L. Ed. 390. The rule is not limited to cases where property has actually been seized under judicial process before a second suit is instituted in another court, but it applies as well where suits are brought to enforce liens against specific property, to marshal assets, administer trusts, or liquidate insolvent estates, and in all suits of a like nature. Farmers' Loan & Trust Co. v. Lake Street El. R. Co., supra; Merritt v. Steel Barge Co., 24 C. C. A. 530, 79 Fed. 228, 49 U. S. App. 85. The rule is limited to actions which deal either actually or potentially with specific property or objects. Where a suit is strictly in personam, in which nothing more than a personal judgment is sought, there is no objection to a subsequent action in another jurisdiction, either before or after judgment, although the same issues are to be tried and determined; and this because it neither ousts the jurisdiction of the court in which the first suit was brought, nor does it delay or obstruct the exercise of that jurisdiction, nor lead to a conflict of authority where each court acts in accordance with law. Stanton v. Embry, 93 U. S. 548, 23 L. Ed. 983; 8 Rose, Notes, 1010. The doctrine is lucidly stated by Judge Thayer in Merritt v. Steele Barge Co., supra. Subject to the conditions stated, where jurisdiction, concurrent with the state court, exists in the federal court, parties have the right—the necessary diversity of citizenship existing—to invoke that concurrent jurisdiction, and it may not be denied them."

The difficulty lies not in an understanding of the principle of the rule, but in applying it correctly to the various cases as they arise. Bearing in mind, as stated in Buck v. Colbath, supra, that jurisdiction rightfully assumed does not "exclude all other courts from all right to adjudicate upon other matters having a very close connection with those before the first court, and in some instances requiring a decision of the same questions exactly," and that, in determining the question of exclusive jurisdiction, "we must have regard to the nature of the remedies, the character of the relief sought, and the identity of the parties in the different suits," it remains to ascertain the nature of the bill filed in the creditors' suit, the relief sought and allowable under the bill, the issues therein proper to be resolved and determined by the

Digitized by Google

court below, the parties involved and their relations to the matter, and the nature and object of the bill filed in the state court, in order to determine the question whether the latter suit is an unjust interference with the rightful jurisdiction of the court below.

The bill is a creditors' bill founded upon the judgment for $565,081.22, recovered April 22, 1903. It sets forth the ownership by the North Chicago Company of certain franchises and railroads, subject to the mortgage of $3,171,000, and another mortgage of $1,614,000, the lease of the property to the Union Traction Company of June 1, 1899, and the deposit of the shares of stock stated in the lease; that the company has no other property which could be subjected to the payment of its debts; that it has a floating indebtedness of about $2,316,000, presently maturing, and which the Union Traction Company had by its lease agreed to pay or renew; that, if the Union Traction Company fully kept and performed the terms of the lease, there would be adequate provision for the payment of the floating indebtedness and of the interest upon the bonded debt; that the corporate life of the defendant corporation is for a term of 99 years from February 14, 1859; that the city of Chicago claims that a large number of the franchises of the defendant would expire in the year 1903, and in subsequent years (some of them on the 30th of July, 1903), and had threatened that, unless the Union Traction Company should consent to terms satisfactory to the authorities of the city, the right and privilege of transporting passengers would be sold by the city to some one other than the railroad company, with the effect, substantially, of transferring to other persons the franchises owned by the defendant corporation, and leased to and exercised by the Union Traction Company—and charged that the city, oppressively, illegally, and unreasonably, would entertain no application for the renewal of the franchise unless the defendant company would renounce, abandon, and repudiate the obligation and authority claimed to have been conferred and imposed by the Legislature of the state, and the right claimed to have been granted for the operation of certain of their railways during the period of 99 years from February 14, 1859; that that action of the city had destroyed the credit of the defendant corporation, so that it is impossible to obtain a renewal of its floating indebtedness, the credit of the Union Traction Company had been destroyed, and the company was insolvent; that, in case of default by the Union Traction Company in the performance of the condition of the lease, the only property which the defendant possesses, which could be used for the satisfaction of its debts, would be the several street railways owned by it along the routes mentioned, with their equipment and appurtenances, and 2,501 shares of the capital stock of the North Chicago City Railway Company, and that the dividend payable upon that stock under the lease would be insufficient to pay the interest upon the mortgages; that the railroads owned by the defendant corporation are incapable of being properly operated apart from the general system of railways owned by the North Chicago City Railway Company; and that the earnings of the railroads owned by the defendant corporation, if separately operated, would not suffice to pay the deficiency of interest upon the mortgage debts of the defendant. It then sets forth the tripartite agreement previously herein stated, and the

Digitized by Google

deposit thereunder of the 20,000 shares of the capital stock of the defendant; that, if the franchises and charter rights of the Union Traction Company and lessor company with respect to street occupancy are protected and preserved intact until they can be fully determined by final decree, the value of the franchises and property will be greatly augmented, and the fund for the payment of creditors greatly increased; that the corporation had not theretofore applied any of the rentals received from the Union Traction Company under the lease to the payment of any of its floating indebtedness, and does not intend so to apply the rentals. It then prays judgment as follows: First. That a receiver be appointed to take possession of all the property of the defendant corporation, and to enforce its rights in respect to the lease to the Chicago Union Traction Company, and in respect to the tripartite agreement. Second. That the complainant's rights may be ascertained, and its priority upon the income and assets of the defendant corporation be established and enforced; that the rights of all other creditors may be ascertained; and that the court will marshal the assets and administer the funds, ascertaining the respective liens and priorities, and decree and enforce the rights of all creditors as they may be finally ascertained upon interventions or applications of each such creditor or lienor. Third. That if the income of the property, and the sale of such portions of it as may be sold without detriment to the value of the remainder, shall prove insufficient for the payment of the claims, the entire property be sold, and the proceeds be applied to the payment of the debts in due order of priority, "and the surplus, if any, distributed among the stockholders in such manner as the court may direct."

The bill was confessed by the North Chicago Company, the sole defendant therein, and no issue was raised or presented for judicial determination.

The bill, it will be observed, is a creditors' bill, seeking the payment of the complainant's judgment in the first instance, and, in subordination thereto, the payment of the claims of other creditors, and, being confessed, the matter becomes one of mere administration. It was, of course, proper for the court to take into its possession, upon the bill filed against the Union Traction Company, the custody of the railroad. The North Chicago Company was not in possession and was not operating any road. Its entire property was leased to the Union Traction Company. Its entire income consisted in the rentals received from the Union Traction Company. It had no disbursements to make from that income in respect of its debts, except upon default by the Union Traction Company, for the interest upon its mortgage and floating indebtedness was to be paid by the lessee, and the principal of the indebtedness to be paid or renewed by it as it should mature. The rental was manifestly a fixed percentage of the capital stock of the North Chicago Company intended for distribution among its stockholders. So that practically all that the court below, through its receivers, could obtain from the North Chicago Company, were the rentals payable by the Union Traction Company, and these rentals could undoubtedly have been applied to the payment of the complainant's debt; but in fact, with the consent of the complainant, and under the order of the court, the receivers paid to the stock-

Digitized by Google

holders of the North Chicago Company, as dividends upon stock—except as to the stock held in trust—$265,722 on account of rentals due July 15 and October 15, 1903.

The bill, then, being a mere creditors' bill, with possibly the right of the court in a proper proceeding to determine and assert the rights of the defendant corporation as against the city of Chicago, the duty of the court would seem to be clear, and that was to marshal assets, to collect the rentals to become due under the lease, to protect the rights of the North Chicago Company under the lease, to obtain satisfaction of the complainant's debt and of all other debts due by the company, to enforce payment of those debts from the lessee company, which had obligated itself to pay them, and if a sale were not necessary to accomplish this, and the Union Traction Company was not able to meet its obligations under the lease, to take from it possession of the leased property and return it to the lessor, for the receivership did not operate to dissolve the corporation or to suspend its corporate faculty.

We now come to the nature of the bill filed in the state court, the prosecution of which was enjoined. It was presented by certain stockholders of the North Chicago Company, on behalf of themselves and all other stockholders, against the Union Traction Company, the Illinois Trust & Savings Bank, and certain individual defendants, the receiver not being a party to the bill. It charges that the judgments obtained by the Guaranty Trust Company were recovered in collusion with the Union Traction Company, and for debts which the latter company was bound, under its lease, to pay and discharge; that the directors of the North Chicago Company were officers, attorneys, or persons in the service of the Union Traction Company; that, at a special meeting of the board of directors, held secretly and without notice, and which was controlled by the officers and attorneys of the Union Traction Company, each of the directors separately resigned, and a new board of directors was elected; that the stockholders had no voice in the selection of the directors, and were deprived of the right to vote; that the majority of the officers and directors then elected were not interested in the North Chicago Company, but all of them were interested, as stockholders or otherwise, in the Union Traction Company, and are subservient to and under the control of that company; that, at the request and by the direction of the officers of the Union Traction Company, this board of directors adopted a new lease with the Union Traction Company, subject to the approval of the holders of a majority of the stock of the North Chicago Company at a stockholders' meeting to be called for that purpose; and the agreement there adopted was deposited in escrow, to be turned over when approved by a majority of the stockholders, and when a like agreement by the West Chicago Company should be made and delivered to the Traction Company. By the provisions of the amendatory lease, the term was extended from 99 years, as specified in the original lease, to 984 years, and the rental was reduced from 12 per cent. to 6 per cent. upon the stock of the North Chicago Company, and that the rights reserved to the North Chicago Company with respect to the 20,000 shares of stock deposited under the tripartite agreement were waived; that the Union Traction Company claimed the right and threatened

Digitized by Google

to require the bank trustee to vote the shares of deposited stock in accordance with the directions of the Traction Company. It is claimed by the bill that, in the absence of legislative authority, the proposed lease is ultra vires the North Chicago Company; that, if otherwise valid, the consent of every stockholder was necessary, and that a single dissenting stockholder could enjoin its execution; that the Union Traction Company has no power of ownership over the shares of stock so deposited, and no power or right to vote that stock. The bill prayed a decree enjoining the voting of the stock upon the question of the ratification of the proposed amendatory lease, for an accounting between the North Chicago Company and the Union Traction Company, and the payment by the latter of the amount found due, in the payment of which default had been made by the Traction Company, and that the shares of stock deposited may be sold in such manner as the court may direct to satisfy the debt, "subject to such rights, if any, which it may appear that any person or receivers may rightfully have in and to any such shares of stock"; that the proposed modification of the lease or tripartite agreement may be enjoined, and for a general relief in the premises.

Does the prosecution of this suit in any way encroach upon the rightful jurisdiction of the court below? It in no way seeks to take from the receivers the possession of any physical property of the North Chicago Company. It in no way affects the receivers in the management of the property under their receiverships. It in no way affects any issue presented under the creditors' bill, or arising under any intervening petition. Under a well-recognized principle, the court below might, at the commencement of the proceedings under the creditors' bill, have directed the receivers of the Union Traction Company to disavow the lease, and to account only for a fair rental value during possession of the property by the receivers. It did not do that, but ratified the lease by directing payment of rental thereunder, and all parties treated the lease as existing. The complainants in the bill in the state court sought to prevent an extension of the term of the lease for a long period at a greatly reduced rental. That was matter which concerned the parties to it, and with which the receivers had rightfully nothing to do. There was no controversy respecting it under the creditors' bill. There could be none, for, according to the allegations of the bill in the state court, the North Chicago Company, the sole defendant to the creditors' bill, controlled by the Union Traction Company, consented to the proposed amendment, and petitioned the court, in which the receivers united, to enjoin the stockholders of the company from asserting their supposed rights with respect to the alleged wrongful action of the board of directors of the North Chicago Company. All this has nothing to do with the marshaling of the assets of the North Chicago Company, and the subjection of them to the payment of its creditors. Surely, when the Union Traction Company has assumed the payment of all of the debts of the North Chicago Company, and has failed in its obligation, and has obtained control of the directors of the North Chicago Company, so that they act solely in the interest of the Union Traction Company, it ought not to be permitted that, ex parte, without opportunity of hearing, or at all, the stockholders of the North Chicago Com-

Digitized by Google

pany should be enjoined from asserting their supposed rights in a proper forum. We do not undertake to pass upon the allegations of the bill filed in the state court. We must assume for the present purpose that they are true. We only say that the assertion of those rights in a state court neither interferes with the possession of any property in the hands of the receivers, nor with any issue raised by, or proper to be adjudicated under, the creditors' bill. But it is said that the court below had the power to direct and require the debtor to execute any instrument necessary for the protection of the res, and that, in the administration of the three estates, the North Chicago Company, the West Chicago Company, and the Union Traction Company, the court could compose and settle differences between them as matter of administration of the estate, and that the modification of the lease agreements was in the nature of settlement. We may concede that the court may require the execution by the debtor of any instrument necessary for the protection of the res, and may compromise disputes between the different estates with respect to the res before the court; but we are not prepared to say that the court, in the administration of these three estates, could compel the lessor companies, against their will, to extend the lease of their lines of railway from 99 years to 984 years, or require them to abate for that long period the rental which had been agreed upon. The court has that property in possession temporarily, and to conserve it in the interest of the creditors, and to return it when those claims are satisfied, or to dispose of the property, as it exists, by sale. We cannot, however, believe that it can be properly within the province of the court to compel a debtor company to extend the lease of its property from 99 to 984 years to a confessedly insolvent corporation at a greatly reduced rental. That would not be administration, but the exercise of contractual capacity lodged not with the courts, but with the parties. It might with equal propriety be said that it was within the power of the court, as an act of administration, in a suit to which the city of Chicago was not a party, to determine the right of the city with respect to the use of its streets by these railway corporations. That right might be adjudicated in an independent suit, or by an ancillary bill, to which the city should be made a party, because such a proceeding would be in protection of the res, and its possession by the receivers, under the allegation that the city is threatening and about to tear up the railway tracks. That would be judicial action, not administrative action. Without question the combination of all the railways under one management and control is an imperial scheme, possibly conducive to the public welfare, possibly beneficial to the three corporations interested, and possibly lifting the Union Traction Company out of its insolvent condition; but the property was not taken by the court to carry out grand schemes founded on supposed future benefits. It has the property simply to conserve it in the interests of creditors; caring for it, indeed, with due regard to public interests, because it is impressed with a public service. But a scheme like that proposed should be entered upon and carried out by those interested and whose money is at stake, and should not be imposed upon them in invitum through the action of the court. It is said, however, that the three corporations were consenting parties, and that

Digitized by Google

the appellant stockholders of the one corporation are bound by the act of their board of directors. That is begging the question, for their bill in the state court charges fraud in the consummation of the scheme; that, while seemingly the action of the three several boards of directors of the three several corporations, it was in fact only the action of the Union Traction Company, operating in its own interest and against the interest of the lessor companies. It is also charged that the action of the boards of directors of the two lessor companies was ultra vires the corporation, and that no such lease is authorized by law. If that be true, the stockholders are not estopped by the act of their directors. Ward v. Joslin, 186 U. S. 142, 22 Sup. Ct. 807, 46 L. Ed. 1093. If the suit, so far as it seeks a receiver of the stock in the hands of the trustee, may be deemed an interference with its constructive possession by the receivers of the federal court, and therefore objectionable, the appellants should not be prevented from prosecuting in the forum of their choice because they have sought too much. They would still be entitled to prosecute their suit with respect to so much thereof as attacks the action of their board of directors and the validity of the amended lease and amendatory tripartite agreement. Such prosecution would not trench upon the rightful jurisdiction of the court below.

Anxious to preserve the federal jurisdiction from improper interference by a state tribunal, we are equally desirous that there should be no improper interference with the rightful jurisdiction of a state court by a federal tribunal. We are unable to perceive that the prosecution in the state court of the suit enjoined by the decree appealed from does in any way interfere with the possession of the res by the receivers, or encroaches upon any rightful jurisdiction under this creditors' bill.

The decree or order of October 9, 1903, is reversed, and the cause is remanded, with the direction to the court below to set the same aside, and to vacate the order of August 15, 1903, and to dismiss the petition of the North Chicago Company filed August 15, 1903.

Digitized by Google

(130 Fed. 532.)

In re DAUCHY.

(Circuit Court of Appeals, Second Circuit. April 20, 1904.)

No. 126.

1. BANKRUPTCY—DISCHARGE—CONCEALMENT OF PROPERTY.

Where a bankrupt conveyed real estate by an absolute deed, more than two years prior to the bankruptcy, in order to constitute a fraudulent concealment by failing to schedule the same, which will defeat the right to a discharge, objecting creditors must show that the bankrupt still retains a secret interest in the property. It is not sufficient that it may have been conveyed in fraud of creditors, but it must still be in fact the property of the bankrupt's estate.

Appeal from the District Court of the United States for the Northern District of New York.

This is an appeal from an order of the District Court for the Northern District of New York, overruling specifications of objecting creditors and confirming the report of the referee recommending that a discharge be granted to the bankrupt. The objecting creditors appeal. The cause below is reported in 122 Fed. 688, 10 Am. Bankr. Rep. 527, where the facts are fully stated.

Walter S. Logan, William T. Read, and Russell G. Lucas, for appellants.

John L. Hill and Thomas O'Connor, for appellee.

Before WALLACE, LACOMBE, and COXE, Circuit Judges.

COXE, Circuit Judge. But little need be added to the elaborate discussion of the facts and the law to be found in the opinion of the District Court. We agree with the conclusion there reached.

The questions presented were, first, whether the bankrupt, since the adjudication, June 24, 1901, knowingly and fraudulently concealed from her trustee real property located at Lansingburgh, N. Y., and Nantucket, Mass., belonging to her estate in bankruptcy; and, second, whether she knowingly and fraudulently made a false oath when she swore to the correctness of her schedules, which omitted this property.

The principal accusation of fraud is based upon the conveyance by the bankrupt of the Nantucket property to her father and by him to her son over two years prior to the adjudication in bankruptcy. At the time the petition was filed and the schedules verified the legal title to this property was not in the bankrupt and had not been for two years and seven months. The transfer to her son, conceding it to be fraudulent as to then existing creditors, has not been made by the act a sufficient ground for refusing a discharge. About this there is no disagreement.

In order to establish a fraudulent concealment it must appear that the property concealed belongs to the bankrupt's estate. It must be shown that the transfer was merely a temporary expedient to place the property beyond the reach of the trustee, the title to be resumed

Digitized by Google

by the bankrupt as soon as prudence will permit. In other words, it must be proved that a secret trust exists in her favor and that her son is under agreement, expressed or implied, to reconvey the property to her when the danger of attack by the creditors has passed.

Were we permitted to indulge in speculation and guesswork and to substitute suspicion for proof it would not be difficult to sustain the creditors' contention, but the burden is upon them to establish by clear and convincing evidence that the bankrupt has been guilty of the offenses alleged. In this they have failed. The referee and the District Court concur in finding that there is insufficient proof to show that the bankrupt retained an interest in the property conveyed and we are constrained to reach a similar conclusion. The law as originally passed, and since the amendments of 1903, does not prevent a discharge in cases of this character. If the law be inadequate or defective in this regard the remedy is with Congress and not with the courts.

The case of Hudson v. Mercantile Nat. Bank, 119 Fed. 346, 56 C. C. A. 250, is clearly distinguishable from the case at bar. The essential ingredients of a fraudulent concealment, which are wanting in the present case, were there clearly established. The court found that the property standing in the name of the son was in fact the property of the bankrupt, the son being the mere naked trustee of the title. The bankrupt occupied the land during the 15 years prior to the bankruptcy and during that period was in full enjoyment of the rents and profits, never accounting to his son. The latter resided in Mexico, paid no attention to the property, exercised no visible acts of ownership since his father's occupancy began and, at no time, demanded an accounting. The facts are so plainly dissimilar that the case cannot be regarded as a precedent.

The order appealed from is affirmed with costs.

(130 Fed. 533.)

FISHERIES CO. v. LENNEN et al.

(Circuit Court of Appeals, Second Circuit. April 21, 1904.)

No. 169.

1. CIRCUIT COURTS OF APPEALS—JURISDICTION—QUESTION OF JURISDICTION OF LOWER COURT.

Under Act March 3, 1891, c. 517, 26 Stat. 826 [U. S. Comp. St. 1901, p. 547], creating the Circuit Courts of Appeals, section 6 (26 Stat. 828 [U. S. Comp. St. 1901, p. 549]), an appeal to such court does not bring before it for review the question of the jurisdiction of the Circuit or District Court from which the appeal is taken, which is reviewable only by the Supreme Court, under section 5.

2. CONTRACTS—LEGALITY—AGREEMENTS IN RESTRAINT OF TRADE.

A contract by which sellers of property agreed, as a condition of the sale, that they would not become engaged or interested in the business

---

¶ 1. Review by Circuit Court of Appeals of jurisdiction of Circuit Courts, see note to Excelsior Wooden Pipe Co. v. Pacific Bridge Co., 48 C. C. A. 351.

Digitized by Google

of catching or manufacturing the products from certain classes of fish along the Atlantic seaboard, in competition with the business of the purchaser, for the term of 20 years, is not void as in restraint of trade and contrary to public policy.

3. SAME—AGREEMENT CONSTRUED.

A covenant by sellers of fisheries plants, together with their good will, not to enter into business competing with the purchaser along the Atlantic seaboard for a term of 20 years, *held* to be personal in its nature, and to preclude them from establishing a competing business on Chesapeake Bay.

Appeal from the Circuit Court of the United States for the District of Connecticut.

For opinion below, see 116 Fed. 217.

This cause comes here on appeal from a decree of the United States Circuit Court for the district of Connecticut enjoining defendants from carrying on menhaden fisheries along the Atlantic Coast.

H. A. Hull and C. E. Perkins, for appellants.

L. E. Warren, for appellee.

Before WALLACE, LACOMBE, and TOWNSEND, Circuit Judges.

TOWNSEND, Circuit Judge. The opinion of the court below contains a finding of all the facts material to the disposition of this appeal. We shall therefore confine ourselves to a discussion of the assignments of error.

The first assignment is based upon the contention that the Circuit Court had no jurisdiction because the matter in demand does not exceed $2,000. Under the construction adopted in this circuit of the sixth section of the Evarts act (Act March 3, 1891, c. 517, 26 Stat. 828 [U. S. Comp. St. 1901, p. 549]), the question of the jurisdiction of the court below is not before us for review. United States v. Lee Yen Tai, 113 Fed. 465, 51.C. C. A. 299.

The second assignment of error presents the question whether the contract in suit was void as against public policy. This question was raised by demurrer in the court below, and the demurrer was overruled on the authority of Oregon Steam Navigation Co. v. Winsor, 20 Wall. 64, 22 L. Ed. 315, and United States v. Trans-Missouri Freight Association, 166 U. S. 290, 17 Sup. Ct. 540, 41 L. Ed. 1007. There was no error in said ruling.

The third assignment of error raises the only real question in the case. Prior to the transactions herein the respondents were engaged in the fishery trade, and had plants at Sag Harbor, Long Island, and at Lewes, Del. They entered into a contract with one Church, or his assigns, for the sale of their plant for $60,000, agreeing therein that they, upon the completion of said sale, would enter into a contract with said purchaser or his assigns "that the vendors shall not become interested in or connected with any business, other than that to be conducted by the purchaser or his assigns, either in catching menhaden, herring, or other fish used in the manufacture of oil or scrap, or in manufacturing such or any fish into oil or guano, upon, along,

Digitized by Google

or off any portion of the Atlantic seaboard, for a period of twenty years." Thereafter, Church having assigned said contract of sale to the American Fisheries Company, respondents duly executed a covenant with said company in accordance with said agreement, said covenant to be binding for a period of 20 years.

The respondents contended that there was a contemporaneous oral agreement, by which employment was guarantied to respondents. The court below, having heard the witnesses in open court, upon conflicting evidence has found that Church made no such promise, and we are bound by said finding. There is no evidence of any such promise on the part of the American Fisheries Company.

The respondents afterwards organized a corporation in Virginia, of which they and the members of their respective families are practically the sole stockholders and managing officers, established a plant at Harborton, on Chesapeake Bay, about 70 miles from the Atlantic Ocean, and began fishing within the bay and outside in the ocean. The defense raised by the assignment of error is that the language, "upon, along, or off any portion of the Atlantic seaboard," does not include the waters of Chesapeake Bay. The term "Atlantic seaboard," in its ordinary interpretation, would seem to be broad enough to include such indentations in the coast as Delaware, New York, or Massachusetts Bay, and, at least, such a location on Chesapeake Bay as the one occupied by defendants. But if there might otherwise be any ambiguity in said language or uncertainty as to its interpretation, it is removed by the acts and the written agreement of the respondents. They sold their entire plant for $20,000 in excess of its appraisal value exclusive of the good will; they refrained from entering into the fishery business until the American Fisheries Company became financially embarrassed; and when they covenanted against fishing off the Atlantic seaboard they expressly stated that this territorial covenant was personal in its nature so far as concerned future competition on their part by the language: "It being the intention of this agreement to bind ourselves, and each of us, firmly by these presents, not to enter into or to become, directly or indirectly, interested in the business of catching or manufacturing any fish when caught, into oil or guano, during the period of twenty years above mentioned."

The decree is affirmed, with costs.

(129 Fed. 883.)

HOSMER et al. v. WYOMING RY. & IRON CO. et al.

(Circuit Court of Appeals, Eighth Circuit. April 28, 1904.)

No. 1,873.

1 APPEAL—GROUNDS FOR REVERSAL—MULTIFARIOUSNESS OF BILL.

An appellate court of the United States will rarely reverse a decree in equity on the sole ground that the bill was multifarious, and it will not do so where the causes of action joined are not repugnant or inconsistent with each other, and where the only loss or inconvenience to a

Digitized by Google

defendant from such joinder arises from his having been subjected to the payment of costs with which he is not justly chargeable, which can be remedied by a modification of the decree.

2. VENDOR AND PURCHASER—PAYMENT OF PURCHASE MONEY—TIME AS OF THE ESSENCE OF THE CONTRACT.

A court of equity will not hold time to be of the essence of a contract for the absolute sale of mining property, so as to cause the forfeiture of the rights of the vendee thereunder because of his failure to make payment promptly, in the absence of an express stipulation to that effect, and where it appears from recitals in the contract in making statement of the consideration that the greater part of the original purchase price of the property had been paid by the vendee under prior contracts between the parties for which the later one was substituted.

3. SPECIFIC PERFORMANCE—CONTRACT FOR SALE OF REALTY—NECESSITY OF TENDER.

When a contract evidences an actual sale and purchase of real property, and time is not an essential element therein, and the parties have substantially progressed with performance, the rule requiring a tender of payment by the purchaser before institution of suit for specific performance is not of imperative application, and a bill for that purpose will not be dismissed for failure to make such tender, where it appears that complainant has a substantial interest in the property, and a dismissal would work loss and inconvenience to both parties; but where the costs of the suit might have been avoided, had the tender been made, they will be taxed to complainant, although the suit is contested.

Appeal from the Circuit Court of the United States for the District of Wyoming.

This was a suit brought by the Wyoming Railway & Iron Company against Edward S. Hosmer, Addison A. Hosmer, Amanda S. Hosmer, David S. Wegg, and the Colorado Fuel & Iron Company, to enforce specific performance of a contract for the sale of certain mining claims and real property appurtenant thereto in Laramie county, Wyo. The contract sought to be enforced was entered into by defendants Edward S. Hosmer and David S. Wegg on September 7, 1898, and was supplemented and qualified by certain agreements of extension. The Wyoming Company, the complainant, was the successor in interest of Wegg. Amanda S. Hosmer succeeded to the interest of Edward S. Hosmer, her son. Addison A. Hosmer, after filing a disclaimer, departed this life. The Colorado Company was the lessee of the Wyoming Company, and was engaged in mining and removing iron ore from the property in controversy. Wegg filed a cross-bill against the Hosmers, which was substantially in aid of the relief sought by the complainant. The Hosmers, excepting Addison A., claimed in their answers a forfeiture of the contract and of all rights of the purchaser thereunder. The property involved in the suit comprised what was generally known as the "Sunrise Group" of patented mining claims, including in such designation the appurtenant mill sites.

The transactions leading up to the contract last mentioned will be briefly noticed. Some time in 1891 William Sturgis, Jr., who was then the legal owner of part and the equitable owner of the remainder of the "Sunrise Group," contracted to sell the property to one Charles A. Guernsey, representing himself, Wegg, and one Kennan, for the sum of $120,000. Afterwards, in June of that year, Edward S. Hosmer came into the transaction, and agreed to furnish the entire amount necessary to acquire the property from Sturgis, the same to be held for the benefit of himself, Wegg, and the latter's associates, Guernsey and Kennan, each to have a one-fourth interest, subject, however, to the payment to Hosmer of the moneys expended by him in the purchase of the property, with certain additions by way of interest and a bonus in case of resale by them. The title was to be taken in the name of Hosmer as his security for the moneys advanced. The agreement between the four parties, dated June 9, 1891, provided that Wegg and his associates

¶ 3. See Specific Performance, vol. 44, Cent. Dig. § 294.

See note at end of case.

Digitized by Google

should have the right to sell the property, and that Hosmer should deed to their vendee upon the payment to him of the moneys advanced and interest, and the bonus in addition thereto. It was also stipulated that, if the property was not sold within a limited period, it should, at Hosmer's option, be conveyed to a corporation to be formed, Hosmer to receive one-fourth of the capital stock, and Wegg and his associates to receive three-fourths thereof, in consideration of the conveyance by them of certain other mining claims and property in the vicinity of the "Sunrise Group." When Hosmer came into the transaction new papers were drawn between him and Sturgis. Sturgis executed a deed conveying to him the "Sunrise Group," and placed it in escrow. Sturgis and Hosmer executed an escrow agreement, so called, which specified the times of maturity of the deferred installments of the $120,000 purchase price. The agreement contained explicit and stringent provisions making time of payment by Hosmer of the essence of the contract, and providing that upon default in the payment of any installment on the due day thereof all previous payments should be forfeited to Sturgis as liquidated damages, and that he might immediately resume possession of the property. About three months later, the property not having been resold by them, several contracts were drawn up and signed by Hosmer and Wegg and his associates, looking to the formation of the corporation and the conveyance to it of the "Sunrise Group" and the other properties. These contracts, however, were subsequently canceled and abandoned. It was contended on the part of Hosmer that the abandonment was caused by certain misrepresentations of Wegg and his associates concerning the title to the properties which on their part they were to convey to the corporation. It was contended by Wegg that the cause was the financial embarrassment of Hosmer, which rendered him unable to complete the payments to Sturgis. Wherein lies the truth among their contentions is immaterial. They are referred to merely as marking a stage in the progress of the transactions between the parties. Whatever the cause, Hosmer concluded to accept repayment of the moneys thus advanced by him and drop out of the enterprise. On March 24, 1892, Hosmer, Wegg, and Guernsey entered into a new contract, Kennan retiring, which recited the contract between Hosmer and Sturgis, that the consideration to be paid Sturgis was $120,000, that at that time Hosmer had paid thereon $42,000 of principal and $912.92 of interest, and that Wegg and his associates had paid thereon $3,000. It was agreed that Wegg and Guernsey were within five years from that time to pay to Hosmer $44,287.92 (the increased amount being due to certain other small disbursements), with interest at 5 per cent. per annum, and were also to assume and pay to Sturgis the remaining $75,000 and interest necessary to secure the Sturgis deeds, which were still held in escrow. Hosmer on his part agreed to use his best endeavors to secure for Wegg and Guernsey an extension from Sturgis of time for paying the remaining installments of purchase price, and he also agreed to execute to them a warranty deed for the property when they had paid to him the amount above mentioned, and had also paid the balance due Sturgis and the taxes upon the property. This is one of the important contracts bearing on the controversy between the parties, and it is one of those recited in the contract of September 7, 1898, the specific performance of which was sought to be enforced. It will be noticed that this new arrangement contemplated no change in the contract with Sturgis, that the right of purchase from him was left in the name of Hosmer, that payments of the balance due Sturgis would therefore be made in the name of Hosmer, and the deeds which were held in escrow would come to the latter upon final payment by Wegg and Guernsey. When this agreement with Hosmer was reached, Wegg and Guernsey contracted with the Wyoming Company, the complainant, a corporation organized and controlled by them, to convey to it the "Sunrise Group" in consideration of a certain amount of its capital stock. Guernsey subsequently surrendered to Wegg his rights under the contract of March 24, 1892, and Wegg completed the payment to Sturgis of the remaining installments of the purchase price, amounting, with interest, to $81,377.80. From time to time prior to September, 1898, he also made payments to Hosmer aggregating $9,857.61, but did not thereby reduce the principal of Hosmer's claim, nor pay all of the interest thereon.

Digitized by Google

On September 7, 1898, Hosmer and Wegg entered into the contract sought to be specifically enforced by complainant's bill and the cross-bill of Wegg. This contract recites that on June 15, 1891, Hosmer contracted with Sturgis for the purchase of the "Sunrise Group," and made certain payments upon the purchase price; that on March 24, 1892, Hosmer entered into a contract with Wegg and Guernsey whereby the latter agreed to pay to Sturgis the balance of the purchase price, and further agreed to pay to Hosmer on or before March 24, 1897, the sum of $44,287.92, with interest; that Hosmer agreed, in consideration thereof, to convey the property to Wegg and Guernsey; that Sturgis had been paid in full, and that deeds vesting title in Hosmer were in the possession of a certain bank; that Wegg had acquired the interest of Guernsey; that Wegg had not paid to Hosmer any part of the principal sum due him, nor had he paid all of the accrued interest; that there was due to Hosmer an additional $5,000 on account of the purchase for Wegg and his associates of another claim not included in the "Sunrise Group"; that Wegg was desirous of acquiring the "Sunrise Group." Following these preliminary recitals is this expression of the consideration for the contractual clauses of the instrument: "Now, therefore, in consideration of the premises and of one dollar in hand paid by each of the parties hereto to the other party hereto, respectively, the receipt whereof is hereby mutually acknowledged, and in further consideration of the covenants herein contained and for other valuable considerations, it is agreed as follows." By this contract Wegg bound himself to pay to Hosmer $60,000, with interest, in certain installments, the last thereof maturing March 24, 1900, and also to pay all of the taxes upon the property. Hosmer agreed to convey the property to Wegg by full and sufficient warranty deed. It was stipulated that the contracts of September 9, 1891, and March 24, 1892, were canceled, and the parties mutually released from all obligations arising by reason thereof; also that if, on March 24, 1900, Wegg was unable to pay the balance of the principal sum due to Hosmer, then notes were to be given secured by mortgage upon the "Sunrise Group" and other properties. Wegg agreed to have the Sturgis deeds recorded, thus vesting complete title of record in Hosmer. The $60,000 to be paid by Wegg to Hosmer was made up of the principal amount specified in the contract of March 24, 1892, the $5,000 advanced by Hosmer in the purchase of the other mining claim and interest, and other disbursements by Hosmer for traveling and living expenses in connection with the "Sunrise Group." There was no provision in this contract of September 7, 1898, making time of payment by Wegg of the essence of his rights thereunder. On May 23, 1899, Hosmer and Wegg entered into another contract, which contemplated the conveyance of the property to the latter, so that he could use it as security for a series of mortgage bonds aggregating $250,000, of which Hosmer was to take an amount sufficient at 80 cents on the dollar (in the language of the contract) "to satisfy the claim he now has against said Wegg." Hosmer agreed to attempt to float the balance of the bonds, and to accept as his commission, if successful, 20 per cent. of the capital stock of the Wyoming Company. Afterwards, for reasons satisfactory to both parties, this contract was abandoned, and Wegg paid to Hosmer $7,500 as compensation for his services. On March 22, 1900, Hosmer agreed in writing that the contract of September 7, 1898, which would mature two days thereafter, should be extended to September 24, 1900, with provision for the payment of some intermediate installments. A further extension to November 24, 1900, was granted by Hosmer upon condition that by so doing there should be no other change or modification of the rights and obligations of the parties. As this last-mentioned day approached Wegg endeavored to secure a further extension of time for payment and the division of the balance due Hosmer into monthly installments. Hosmer resided in New York; Wegg in Chicago. On October 17, 1900, Hosmer wrote Wegg that he could not decide definitely upon any plan of settlement differing from that of the contract in force until some time in November, when he would be glad to take the matter up. He also wrote: "You may rest assured that I will do everything I can to arrange the matter in some way to your satisfaction, if you find yourself unable to carry out the terms of your agreement." On October 26, 1900, Wegg wrote requesting favorable action upon his proposition

Digitized by Google

of modification, and Hosmer replied on the 1st of November that he was busily engaged in other matters, and when at liberty would, if Wegg would come to New York, talk the situation over with him and see what could be done. On the 15th of November Hosmer wrote that he had completed his other labors and would see Wegg any time that he came. On the 23d Wegg wired that on account of the illness of his wife he was unable to go East at that time, and making another proposition to pay the amount due to Hosmer in monthly payments. On the 24th of November, 1900, the final day of the last extended period, Hosmer wired Wegg that he could not accept the terms suggested and notified him that he (Hosmer) would stand on his legal rights. On the same day Wegg wired in reply that he was ready to pay Hosmer the amount due him, but that he should stand on his legal rights and insist upon delivery of perfect abstract of title with warranty deed, and that until Hosmer was ready to deliver the same he would hold him responsible for costs and damages. The demand for the delivery of abstract of title with warranty deed was unjustifiable, as Wegg well knew. He had several times agreed to have the original deed to Sturgis and the Sturgis deed to Hosmer recorded, and had defaulted in his promise and duty. On the 24th of November, 1900, Hosmer wrote to Wegg confirming his telegram of the same day, but indicated that his purpose was not to make a modification of their contract relations excepting upon personal conference. When Wegg received this letter, he wired Hosmer on the 27th that he misunderstood the latter's telegram, and on the same day he wrote him renewing his proposition of modification. To this Hosmer replied that, as the money had not been paid on the 24th of November, he had sold the property to a party in New York. The sale referred to was to his mother, who took with notice of whatever rights or equities were possessed by Wegg. The deed to Mrs. Hosmer was executed on the 28th of November, 1900. On the 10th day of the following month Wegg deeded the property to the Wyoming Company. On the 24th of November, 1900, Wegg had perfected arrangements enabling him to secure the money to pay the entire amount due to Hosmer, but, instead of utilizing his ability in that respect, he endeavored to secure from Hosmer another extension and modification of terms. Under the contract of September 7, 1898, and its extensions, Wegg paid Hosmer $15,600. All of the payments made to Sturgis and Hosmer upon the property amounted in the aggregate to $109,835.41. The amount due Hosmer, principal and interest, when the suit was instituted, was $53,205.40. At this time the complainant or Wegg had received in royalties upon ore taken from the "Sunrise Group" the sum of $23,365.59. The bill of complaint was filed December 12, 1900. No tender of the amount due Hosmer was made by either the complainant or Wegg prior to the institution of the suit. The bill, and an amended bill afterwards filed, contained a general offer to pay and deliver to defendants, or to such of them as might be entitled thereto, and upon such terms and at such times as might be found by the court to be just and right, any and all stocks, moneys, and other property found to be due to them. Wegg by his cross-bill made substantially the same offer in connection with a prayer for an accounting.

On November 5, 1898, the Wyoming Company executed a mining lease of the property in controversy to the Colorado Fuel & Iron Company; the latter contracting thereby to pay certain royalties upon the ore removed. It was alleged in the amended bill of complaint of the Wyoming Company that it had the right to cause the application of the royalties accruing under the lease to the payment of any sum that might be found to be due to Hosmer; that the Hosmers were seeking to prevent the payment of royalties, and that the lessee was threatening to discontinue its payments; that the complainant consented, and prayed that the Colorado Company be required to pay into court such royalties as might accrue under the lease, and that the court make such disposition thereof as was just and right. Mrs. Hosmer demurred to the amended bill upon the ground, among others, that it was multifarious, because of the joinder of a suit to enforce the contract of September 7, 1898, with an action against the Colorado Company upon the lease. The demurrer was overruled. Upon motion of complainant the Circuit Court ordered the Colorado Company to pay into court the royalties accruing under the lease.

Digitized by Google

The company did so. Subsequently it was decreed that the clerk pay the money so deposited to the complainant, and the costs of the suit, including the 2 per centum upon the amount of royalties paid to complainant out of the registry of the court, were taxed to the Hosmers. The final decree awarded specific performance upon payment into court by complainant of the amount found due to Hosmer, from which was to be deducted the costs. The Hosmers appealed.

Brainard Tolles and J. F. Vaile (Wolcott, Vaile & Waterman, on the brief), for appellants.

John W. Lacey, for appellee Wyoming Railway & Iron Company.

Timothy F. Burke, for appellee David S. Wegg.

Before SANBORN, VAN DEVANTER, and HOOK, Circuit Judges.

HOOK, Circuit Judge, after stating the case as above, delivered the opinion of the court.

Did the Circuit Court commit reversible error in overruling the demurrer to the amended bill of complaint, which was alleged to be multifarious? Was time of the essence of the contract sought to be enforced? Was the failure of complainant and its predecessor in interest to tender the amount due under the contract fatal to the maintenance of the suit? These are the questions presented on this appeal.

The doctrine of multifariousness in equity pleading rests largely upon considerations of inconvenience and expense. Its limitations are not sharply defined, and it would be both difficult and unwise to formulate a rule for unvarying application. It often becomes a nice question whether the convenience of a complainant, and his interest that a multiplicity of suits be avoided, which is also of public concern, outweigh the inconvenience of the defendants arising from the joinder of two or more causes of action in a single suit, and whether the relation between the causes of action is sufficiently apparent to present a common point of controversy. United States v. Bell Telephone Co., 128 U. S. 352, 9 Sup. Ct. 90, 32 L. Ed. 450; Brown v. Guarantee Co., 128 U. S. 403, 410, 9 Sup. Ct. 127, 32 L. Ed. 468; Barney v. Latham, 103 U. S. 205, 215, 26 L. Ed. 514; Oliver v. Piatt, 3 How. 333, 411, 11 L. Ed. 622; Gaines v. Chew, 2 How. 619, 641, 11 L. Ed. 402. But it has rarely, if ever, happened that a decree has been reversed in an appellate court of the United States upon the sole ground that the bill was multifarious. An appellate court should hesitate in awarding a reversal, if the evil resulting to an objecting party from a pleading of that character may be properly and effectively cured. In the absence of a union of causes of action or defenses which are repugnant and inconsistent with each other, the substantial evil is generally one of costs accruing in respect of a matter in which an appellant has no concern. In the appeal before us it is contended that the complainant used the suit to enforce the payment of rents into court by an unresisting defendant, that the demand was not of an equitable nature, that the contract reserving the rents was solely between complainant and its lessee, that the appellants were not parties to the instrument and asserted no claim thereunder, that the trial court ordered the moneys so turned into court by the lessee to be paid to complainant and taxed against the appellants all of the

Digitized by Google

costs including those connected with that feature of the case. Assuming, without determining, that the claim of multifariousness is well founded, it is clear that with the lifting of the burden of the costs all substantial cause for complaint would disappear, and that in the action of the Circuit Court there would be nothing of prejudice to the appellants.

The general rule applied in courts of equity is that time is not ordinarily of the essence of a contract for the sale of real property, and that it will not be so regarded unless it affirmatively appears that the parties so intended it. Such intent may be indicated by express stipulation to that effect, or it may be gathered by clear implication from the character of the contract itself, or from the nature of the property which is the subject of the contract, or the avowed purposes of the parties with reference thereto. Thus a strict and prompt performance of optional contracts by the party to whom the privilege of purchase is given is regarded as essential to the maintenance of his rights thereunder. The same rule has been applied to contracts for the sale of property of a speculative character, or which is subject to sudden or frequent fluctuations in value or condition. The principle underlying this rule is manifest. It is designed to prevent a defaulting party from utilizing his own default in a hazard or speculation to the disadvantage of another. But the mere fact that the property is of the character mentioned does not give rise to a necessary or inevitable inference that time of performance is a vital and essential feature of the contract. Other facts and other circumstances may so condition the relation of the parties as to clearly impel a contrary conclusion. Notwithstanding the character of the property, it may appear from their course of dealing that the contracting parties did not regard time as of the essence. It may also appear that the transaction has progressed to such a stage that the vendee has an equity in the property equal or superior to that of his vendor, and that the latter's title or possession should be regarded in the light of a security for the balance of the purchase price, or that the vendee has such an interest that it would be unconscionable to permit of its forfeiture. When by the omission of affirmative stipulation the question is at large, and is one for the determination of a court of equity, it is to be so determined, if possible, that no unnecessary hardship or loss shall be inflicted upon one party not demanded by the clear rights of the other. It is presumed, in the absence of countervailing reasons, that such interpretation was within their intent and purpose when they assumed the contract relation and before their controversy arose. To reach a just conclusion in a suit for specific performance, a court may avail itself of all of those aids which the rules of law permit in the ascertainment of the intention of the contracting parties, and all of the facts and circumstances which serve to disclose their conduct under the contract, their own interpretation of its terms, and their relations to the property and to each other. While it will not make a new contract for them, nor interpolate stipulations not of their selection, nevertheless it will distinguish between those provisions which pertain to the form and those which are of the substance of their agreement, to the end that the former be not permitted to lead to an inequitable and unjust result. The power so to do belongs to one of the great heads of

Digitized by Google

equity jurisprudence. No express provision making prompt payment by Wegg of the essence of his rights appears in the contract of September 7, 1898, or in any of the agreements of extension. The fixing in the extension agreements of new times for payment is of no more importance in this connection than the specification of the maturity of the installments in the original contract. Does it arise by implication that such vital importance should be attached to time of payment by Wegg? It is clear that the contract is not of an optional character. On the contrary, Hosmer agreed to convey the property to Wegg, and the latter obligated himself unconditionally to pay the remainder of the purchase price. This operated to pass to Wegg an equitable interest in the property, even if he possessed none before, and his interest increased with his continued payments. The legal title remained in Hosmer as security for the balance due him and as trustee for his vendee. Nor should the consideration be overlooked that Hosmer did not acquire ownership of the property solely through his own means, but that, on the contrary, nearly two-thirds of the consideration moving to Sturgis, the original owner, was paid directly by Wegg himself, and in that wise Hosmer secured his title. It is true that the property in controversy is a group of mining claims containing deposits of iron ore, but it is also true that whatever enhancement in value has occurred is attributable largely, if not wholly, to the efforts and industry of Wegg and the complainant. Certain prior transactions are expressly referred to in the contract of September 7, 1898, as constituting a part of the consideration thereof. We do not reopen that contract for the purpose of inserting new stipulations, but simply avail ourselves of its affirmative recitals of the considerations moving between the parties. Briefly stated, those recitals refer to the contract of sale by Sturgis to Hosmer, the partial payment of the purchase price by the latter, his contract of sale to Wegg and associates in consideration of reimbursement to him and payment of balance due Sturgis, the actual payment in full to Sturgis, and the inclusion as part of the consideration of a sum of money expended by Hosmer in another matter. By these recitals and by the evidence we learn that at the institution of the suit Wegg had paid to Sturgis and Hosmer upon the purchase of the property more than $86,000 over and above the royalties received from the mining operations. When this is placed against the fact that there remained due to Hosmer, principal and interest, but $53,205.40, it becomes apparent, in the light of all of the other circumstances of the case, that a forfeiture of the purchaser's rights would be grossly inequitable and unjust, and that it would be unconscionable to impose such a penalty upon him. While it is true that the prior contracts were canceled and the parties released from all obligations thereunder by the contract of September 7, 1898, what was meant thereby was merely that the last contract should stand as the evidence of their rights and obligations, and not that the former could not be referred to, as they were in fact expressly referred to, as indicating in part the consideration already paid and the equitable relation thereby created.

Neither the complainant nor Wegg made a tender of the balance of the purchase price due to Hosmer before the suit was instituted, nor is it at all clear that the offers set forth in the pleadings are sufficient

Digitized by Google

either in time or character. The amount due to Hosmer was fixed and certain, and did not depend for its ascertainment upon trial and decree by the court. No accounting was necessary. The indefinite and uncertain tenders in complainant's bill and Wegg's answer were well calculated to postpone the performance of an immediate and positive obligation. In this connection it should be said that upon a careful consideration of the record we are of the opinion, notwithstanding the averments of forfeiture in the answers of the Hosmers, that, had a full and fair tender been made to them before suit was instituted, it would have been accepted, and thereby all of the costs incident to this litigation would have been avoided. The course of complainant and of Wegg, its grantor, has caused them to be unfairly charged with the payment of a large bill of costs. Ordinarily, when a tender is not made before the institution of the suit, or is not made in the bill in cases in which it is proper to so tender performance, the bill will be dismissed at complainant's cost. But should that be done in this case? The transactions of the contracting parties were such that at the time the suit was instituted each of them possessed a substantial interest in the property in controversy. The purchaser had paid the major part of the purchase money. He had been, and his grantee was then, in the actual possession of the property, and had caused to be made extensive improvements in the immediate vicinity, to the end that the product thereof was readily marketable. The seller retained the legal title, and there remained unpaid to him, even with interest added, considerably less than one-half of the principal of the original purchase price. When a court of equity has acquired jurisdiction of a suit, it will generally proceed to a complete determination of the entire controversy, and will not remit the parties to additional suits or actions for relief, if such course may be properly avoided. And while, in working out an equitable result, a court has no power to impose conditions not authorized by the settled principles of equity jurisprudence, nevertheless it is well recognized that, under the doctrine that he who seeks equity must do equity, it may so condition and qualify its decree that a righteous adjustment of the claims of the contending parties may be accomplished. The Hosmers have not sought, by act or pleading, a rescission or termination of the contract, except by way of strict forfeiture of Wegg's equitable interests; and this, we have seen, is inadmissible. There should be no forfeiture of his or his grantee's interests, if they are still willing to promptly pay the balance which is due.

No result beneficial to any of the contending parties would be secured by a dismissal of complainant's bill because of failure to tender performance. Their rights would be by such course left in a condition wholly unsatisfactory. When the contract evidences an actual sale and purchase of real property, and time is not an essential element therein, and the parties have substantially progressed with performance, the rule requiring tender before institution of suit for specific performance is not of imperative application. Much depends upon the equities of the particular case, and whether the omission to proffer performance has resulted in a hardship or loss that cannot be readily remedied by the decree. It is not infrequent that the question is resolved into one concerning the mere assessment or apportionment of costs. In Hepburn

Digitized by Google

v. Auld, 5 Cranch, 262, 3 L. Ed. 96, it was held that a vendor could compel specific performance of a contract for the sale of land, if able to give a good title at the time of the decree, although it was perfected after suit was instituted. And in Hepburn v. Dunlop, 1 Wheat. 179, 4 L. Ed. 65, it was suggested that in a case peculiarly circumstanced a court might even continue the cause for the purpose of affording a party time for the completion of his title. In Stevenson v. Polk, 71 Iowa, 288, 32 N. W. 346, it was said:

"It is sufficient if the title is perfected or incumbrances removed prior to the trial. If the court can then by a decree protect the rights of all parties, this is all either can justly ask, unless there has been a rescission, or an offer to rescind, and the party so offering has done all he is required to do, and was entitled thereto at the time the offer was made." Wilson's Ex'rs v. Tappan, 6 Ohio, 174; Linn v. McLean, 80 Ala. 368; Chrisman v. Partee, 38 Ark. 60; Tewksbury v. Howard, 138 Ind. 111, 37 N. E. 358; Oakey v. Cook, 41 N. J. Eq. 364, 7 Atl. 503.

The principle of these authorities may well be applied to the case of a proffer or tender by a vendee, where considerations of equity and justice demand it. On the whole we are of the opinion that substantial justice will be accomplished by the reversal of the decrees of the Circuit Court and the entry in lieu thereof of a decree in conformity with the views herein expressed.

The decree below will be reversed, with costs, and the case will be remanded to the Circuit Court, with instructions to enter a decree to the effect that Edward S. Hosmer and Amanda S. Hosmer recover of the complainant below their costs in the Circuit Court, to be duly taxed, and that if, within 30 days after the filing in the Circuit Court of the mandate herein, the complainant, as the grantee of Wegg, shall pay into the Circuit Court, for the benefit of the said Edward S. Hosmer and Amanda S. Hosmer, the entire amount due and unpaid under the contract of sale, with interest to the date of payment, all of the costs of this suit in the Circuit Court and in the Circuit Court of Appeals, and the commission or percentage upon said amounts which the clerk of that court will be entitled to obtain for his services in receiving and disbursing the money, the complainant may have specific performance of the contract, and the Hosmers may receive the moneys thus deposited for their benefit; but, if it fails to make these payments at the time and in the manner above specified, it shall be deemed to have elected to abandon all rights under the said contract, and Amanda S. Hosmer shall be deemed and decreed to be the owner of the property free from the claims of the complainant and of the defendant Wegg. Amanda S. Hosmer should not be required to execute a deed containing covenants of warranty against demands, liens, or titles of persons who do not claim under or through her or her grantor, Edward S. Hosmer, nor against claims, liens, or titles arising out of unpaid taxes, general or special.

It is so ordered.

Digitized by Google

NOTE.

Necessity of Tender of Performance by Party Seeking Specific Performance of Contract.

I. Tender of Consideration.

1. In General.

[a] To entitle a purchaser to specific performance of a land contract, tender of the unpaid purchase money must be proved.

—(Cal. 1855) Goodale v. West, 5 Cal. 339;
(D. C. 1894) Jenkins v. Locke, 3 App. D. C. 485;
(Iowa, 1845) Huff v. Jennings, Morris, 454;
(Pa. 1903) Hughes v. Antill, 23 Pa. Super. Ct. 290;
(Tex. 1896) Hunter v. Clayton (Civ. App.) 36 S. W. 326.

[b] (U. S. 1896) By a contract of sale of real estate the purchasers were to have 30 days from the date of the contract to examine the title, and were to complete the purchase if the title was approved by their attorneys, and to have a return of their part payment if it was disapproved. The vendor agreed to at once furnish an abstract of title to the premises. *Held* that, in order to enforce specific performance, the purchasers were bound to tender the remainder of the purchase money within the 30 days, and the failure of the vendor to furnish the abstract of title did not excuse them from making the tender, so far as their right to specific performance was concerned.—Kelsey v. Crowther, 162 U. S. 404, 16 Sup. Ct. 808, 40 L. Ed. 1017.

[c] (U. S. 1851) A bill will not lie to enforce a contract to sell land, whose consideration was money to be paid and certain work to be done, where the work is not done, and there has been no offer to perform.—Denniston v. Coquillard, Fed. Cas. No. 3,801 [5 McLean, 253].

[d] (Ark. 1904) Where taxes have been paid by vendors after making a contract of sale of land, a tender of their amount is essential to the vendees' right to enforce specific performance.—Vance v. Newman, 80 S. W. 574.

[e] (Ill. 1873) A vendor's claim that he has forfeited the contract for the vendee's default in making the first payment, and his refusal to receive such payment subsequently tendered by the vendee, stating as his ground of refusal that the contract was at an end, will not relieve the vendee from the duty of making a tender of subsequent installments as they mature; and his failure to do so is an acquiesence in the forfeiture, even though in the first instance it may not have been rightfully asserted by the vendor.—Kimball v. Tooke, 70 Ill. 553.

[f] (Ill. 1892) A purchaser of land cannot obtain an enforcement of his contract where he neither tenders the purchase price, nor brings the money into court, nor offers to pay it.—Short v. Kieffer, 142 Ill. 258, 31 N. E. 427, affirmed (1893) 43 Ill. App. 515.

[g] (Iowa, 1855) In an action to compel an administrator to convey, it was *held* not necessary to have made a tender and demand, as the administrator could not have conveyed without the direction of the court, and the demand would have been in vain.—Collins v. Vandever, 1 Iowa (1 Clarke) 573.

[h] (Iowa, 1876) M. agreed to convey certain realty to L. upon consideration that the latter should pay two notes of the former as they matured; the notes were secured by a mortgage upon the land in question. L. upon paying the notes, caused them to be transferred to him by indorsement, and then demanded his deed, stating that the notes and mortgage were in his possession. *Held*, that he was not bound to make a tender of the notes to M. as a condition precedent to his right to demand a deed.—Lawson v. McKenzie, 44 Iowa, 663.

[i] (Ky. 1809) Specific performance will not be decreed in equity upon a contract for sale at a stipulated price, unless a performance, or tender to perform, is shown on the part of the one asking for the decree.—Greenup v. Strong, 4 Ky. (1 Bibb) 590.

[j] (Ky. 1904) Where a vendee suing for specific performance avers that he is ready and willing to do all acts required of him in the execution of the contract according to its terms, it may be enforced without an actual legal

Digitized by Google

tender, other equitable requirements being satisfied.—Harris v. Greenleaf, 79 S. W. 267, 25 Ky. Law Rep. 1940.

[k] (Minn. 1864) The obligor in a bond for the conveyance of land by himself, his heirs or assigns, upon payment to him or them of a certain sum, conveyed the premises to a third party, with notice of the bond. In an action, in equity, for specific performance, in which the obligor and his grantee were joined as defendants, it was *held* that the grantee was bound to convey the land upon the payment of the purchase money to him; and that a tender of the amount to the obligor was not necessary.—St. Paul Division v. Brown, 9 Minn. 157 (Gil. 144).

[l] (Mo. 1853) A purchaser at a trustee's sale, the terms of which are cash, who does not tender the money within a reasonable time, cannot afterwards demand a specific performance of the contract against the debtor who has paid the debt and costs, especially if he obtained his purchase through the inadvertence of the debtor. He who wants strict law, in such a case, must strictly comply with the law.—Heuer v. Rutkowski, 18 Mo. 216.

[m] (N. J. 1887) A bill in equity brought by a vendee who has been in possession of land for 20 years, against the heirs of a vendor, for the specific performance of the following agreement: "Received, 12 Mo., 13th, 1865, of Adam P. Ware, one hundred dollars, on acct. of a lot of land sold him; the deed to be hereafter made to him, and, when delivered, he is to give his note for $58 additional,"—cannot be maintained without the vendee making a tender of his note for the amount due, with interest, or of the amount due in cash, before filing his bill.—Ware v. Lippincott (Ch.) 10 Atl. 404.

[n] (N. J. 1897) A lease provided that, on notice by the lessees three months before the expiration of the lease, the lessor would convey the property for $6,000 cash and a note for $10,000, payable in one year with interest. The lessees gave the required notice, and, at the expiration of the term, offered to pay $16,000 in cash, and interest on $10,000 for one year, which the lessor refused. *Held*, that the provision of the lease became a binding contract of sale on notice of acceptance of the option by the lessees, and the failure to tender payment as provided would not bar their right to specific performance.—Zimmerman v. Brown (N. J. Ch.) 36 Atl. 675.

[o] (N. J. 1903) The grantor in a contract for the sale of land, having intentionally avoided giving the grantee an opportunity to make a tender, may not thereafter, in a suit by the grantee for specific performance, be heard to complain of the absence of a tender.—Connely v. Haggarty, 56 Atl. 371.

[p] (N. Y. 1856) In a suit in equity, where the defendant seeks to enforce the specific performance of a contract on the part of the plaintiff, it is not necessary to entitle him to a decree in his favor that he should show a previous tender of performance on his part. An offer in the answer to perform will be sufficient in its place, if necessary; but the omission of a tender may affect the question of costs.—Beebe v. Dowd, 22 Barb. 255.

[q] (N. Y. 1896) Technical tender of performance by the vendee is not necessary to his maintenance of a bill for specific performance.—Bennet v. Bennet, 42 N. Y. Supp. 435, 10 App. Div. 550.

[r] (N. Y. 1902) Defendant having agreed to convey to plaintiff land composed of plats A and B, afterwards represented to plaintiff that he had already agreed to sell the latter plat to S., and was therefore unable to convey it to plaintiff, whereupon plaintiff paid the full price agreed and received a conveyance of plat A only. Plaintiff subsequently purchased from S. all of his interest in plat B, but defendant refused to convey such plat to plaintiff. *Held* that, in an action to compel a conveyance of the land sold, it was unnecessary for plaintiff to tender defendant a proportionate part of the purchase price agreed to be paid for the whole premises.—Guthrie v. Martin, 78 N. Y. Supp. 913, 76 App. Div. 385.

[s] (Ohio, 1856) When a covenantee in a joint covenant for the conveyance of real estate is ready and willing to pay the purchase money at or within the time limited, and the agent of the covenantors to receive it cannot be found, or the heir of one of them, by reason of nonage, cannot execute a proper deed, a formal tender of the money is not necessary, but a petition may be filed for a conveyance, offering to bring the money into court.—Ohio & M. R. Co. v. Crary, 1 Disn. 128.

Digitized by Google

[t] (Or. 1899) The consideration for an agreement to convey lands was the payment of a sum of money, and the delivery on demand, "at the mill," of lumber which the vendor intended to use in a house situated not far from the premises in question. The lumber had not yet been manufactured, and the vendee owned a sawmill at a distance, from which it could only be transported at considerable expense to the place where the vendor intended to use it. It was the intention of the parties that the vendee should erect a sawmill on the lands purchased. The testimony as to the mill at which the parties intended the delivery to be made was conflicting. *Held* that, the contract being indefinite, the vendee could not enforce specific performance of the agreement until a tender by him of the lumber at the premises where he intended to erect the sawmill.—David v. Anderson, 56 Pac. 523, 34 Or. 439.

[u] (Pa. 1823) Where a vendor of land, after giving possession to the vendee, under articles of agreement, obtains possession for himself, fraudulently, before the day for paying the purchase money, the vendee may recover, in ejectment, without tendering the purchase money.—Harris v. Bell, 10 Serg. & R. 39.

[v] (Pa. 1840) In an action of ejectment founded upon legal title, the plaintiff is not required to tender the money due to the defendant upon his equitable claim before suit is brought; but if the action is founded upon an equitable title, the plaintiff, to entitle him to recover, must not only tender the money before suit brought, but he must also have it in court ready to be paid in the event of a verdict for him.—Gore v. Kinney, 10 Watts, 139.

[w] (Pa. 1841) If the regaining the possession by the vendor be effected by means of collusion with the tenant of the first vendee or his heirs, it is not necessary that a tender of the residue of the purchase money should be made by the latter, before instituting an action of ejectment to recover the possession.—Wykoff v. Wykoff, 3 Watts & S. 481.

[ww] (Pa. 1844) A vendor of lands gave the vendee immediate possession under an agreement whereby the vendee was to pay a portion of the purchase money on a certain day when he was to receive a conveyance in fee. *Held*, that if the vendor recovered the possession by legal process, or by the consent of the vendee, upon the latter's default, he (the vendor) could retain the possession until the purchase money was paid or tendered, which must be done before the institution of an ejectment to recover the possession.—Gregg v. Patterson, 9 Watts & S. 197.

[x] (Pa. 1860) A party who has an equity resulting from the payment of a part of the purchase money cannot recover in ejectment without a tender of the balance of the unpaid purchase money; at most, he can only have a conditional verdict.—Chadwick v. Felt, 35 Pa. (11 Casey) 305.

[xx] (Pa. 1862) Where the vendor by articles has conveyed to another, whose vendees entered and cut timber, the vendee, under articles, must tender the purchase money before bringing ejectment for the land, or its value.—Baum v. Dubois, 43 Pa. (7 Wright) 260.

[y] (Pa. 1894) In ejectment by heirs of a vendee against a subsequent purchaser from the vendor, it appeared that, after the death of such vendee, the vendor brought ejectment to enforce specific performance of the contract of sale; that an attorney appeared for defendants therein, the widow and minor heirs of the vendee, and confessed judgment under a warrant of attorney contained in such contract; and that no writ of hab. fa. was ever issued on such judgment, but the land was vacated and the vendor resumed possession before the sale to defendant, who erected a house on the land, and occupied it about nine years before suit was brought against him. *Held*, that plaintiffs could not recover in the absence of a tender to such vendor of the unpaid price, and a showing of readiness to pay by having the money in court.—Dwyer v. Wright, 162 Pa. 405, 29 Atl. 754.

[yy] (Tex. 1899) A purchaser who does not tender the unpaid purchase price into court before judgment is not entitled to a judgment for the land in an action therefor, nor for a right to redeem the same.—Polk v. Kyser, 53 S. W. 87, 21 Tex. Civ. App. 676.

[z] (Tex. 1899) The purchaser by a parol sale can enforce specific performance when he is sued for the land only by showing equities and tendering

Digitized by Google

unpaid purchase money before judgment.—Polk v. Kyser, 53 S. W. 87, 21 Tex. Civ. App. 676.

[zz] (W. Va. 1900) Where, in an action to specifically enforce a parol contract for an exchange of land, plaintiff failed to allege or prove that he had paid or offered to pay to defendant a sum of money which he was to pay as an additional consideration for the exchange, judgment should have been rendered in favor of defendant.—McCulley v. McLean, 37 S. E. 559, 48 W. Va. 625.

2. Dependent Agreements and Concurrent Acts.

[a] (Conn. 1853) The defendant to a bill for the specific performance of a contract agreed "to convey by a good and valid deed" certain premises within one year, at any time after four days' notice, on condition that the plaintiff should pay for the same in a stipulated manner, at the expiration of said year, or the notice to be given. An unrecorded deed of said premises (of which the plaintiff was ignorant at the time of said agreement), assigning to the defendant's grantor a mortgage given by a former owner thereof, contained a reservation of "such interest as the mortgagor acquired by virtue of a certain prior mortgage of the same to him, to secure the payment of fourteen hundred dollars." On being afterwards inquired of by the plaintiff respecting said reservation, and notified by him that he should not accept a quitclaim deed of said premises, the defendant made no explanation, but offered, for an additional sum, to clear up the title. Before the expiration of the year, the plaintiff notified the defendant that he should purchase and take the property according to their agreement, and demanded of him a warranty deed, tendering therefor the stipulated payment. The defendant refused to execute such a deed, and thereupon tendered a quitclaim deed, and demanded payment, which the plaintiff refused. *Held*, that such stipulated conveyance by the defendant, and payment by the plaintiff, were to be contemporaneous acts, and each party was bound to perform, on his part, at the fixed time.—Potter v. Tuttle, 22 Conn. 513.

[b] (Fla. 1897) Where the payment of the last installment of purchase money by the vendee and the conveyance of the title by the vendor are concurrent and dependent acts, the vendee, before he can maintain a bill for specific performance against the vendor, must pay or tender the purchase money in full.—Shouse v. Doane, 21 South. 807, 39 Fla. 95.

3. Refusal of Vendor to Perform.

[a] Where a vendor of real estate, who has not yet executed a deed, denies the obligation of the contract of sale, or places himself in such a position that it appears that if a tender of the price were made its acceptance would be refused, no tender need be made by the purchaser in order to support his suit for specific performance. It is enough if he offer in his bill to bring in the money when the amount is liquidated and his decree granted.

—(Ala. 1880) Stewart v. Cross, 66 Ala. 22; (1891) Root v. Johnson, 99 Ala. 90, 10 South. 293;
(Iowa, 1884) Hopwood v. Corbin, 63 Iowa, 218, 18 N. W. 911; (1886) Veeder v. McMurray, 70 Iowa, 118, 29 N. W. 818;
(Minn. 1868) Gill v. Newell, 13 Minn. 462 (Gil. 430); (1875) Brown v. Eaton, 21 Minn. 409;
(Mo. 1871) Deichman v. Deichman, 49 Mo. 107;
(N. Y. 1890) Baumann v. Pinckney, 118 N. Y. 604, 23 N. E. 916;
(Tenn. 1888) Bradford v. Foster, 87 Tenn. (3 Pickle) 4, 9 S. W. 195;
(Vt. 1887) Welch v. Darling, 59 Vt. 136, 7 Atl. 547;
(Va. 1867) White v. Dobson, 17 Grat. 262;
(Wis. 1857) Wright v. Young, 6 Wis. 127, 70 Am. Dec. 453.

[b] (Ala. 1867) Specific performance of an agreement to convey land will not be enforced if the purchaser has not fulfilled his part of the agreement by an offer of the payment of the purchase money, and has neglected to seek legal redress until nine months after the time fixed for the payment, notwithstanding that the vendor had declared two years prior to such time that he never would comply with the contract on his part.—Gentry v. Rogers, 40 Ala. 442.

Digitized by Google

[c] (Cal. 1879) A lease from C. to D. gave D. an election to purchase the premises on paying $6,000, and certain interest from the date of the lease. D. notified C. of such election and tendered the $6,000, but not the interest. C. declined the tender and denied the right of D. to purchase. *Held*, that C.'s denial was a waiver of the necessity of a tender before suit by D. for specific performance; and the complaint therein offering "to comply with all the terms and conditions of the contract," the same should, on paying the $6,000 and interest, be granted, deducting what had been paid for rent.—Dowd v. Clarke, 54 Cal. 48.

[d] (Cal. 1892) Where the purchaser of land by contract pays part of the purchase money, takes possession, and makes improvements, the vendor, by bringing action against him to quiet title, without first offering to convey, repudiates the contract, and the purchaser may file a cross-complaint for specific performance without a tender of the balance of purchase money.—Sheplar v. Green, 96 Cal. 218, 31 Pac. 42.

[e] (Cal. 1898) Under Civ. Code, § 1440, allowing a party to an obligation, which the other party repudiates before a default has occurred to enforce the obligation without performing or offering to perform the conditions in favor of the other, the refusal to allow a party to an option contract to perform the conditions of it, together with a repudiation of the contract prior to the expiration of the option, releases the holder of the option from tendering the price to be paid under it prior to suing for specific performance.—Stanton v. Singleton, 54 Pac. 587.

[f] (Ill. 1877) If, on a purchaser's offer to pay the last of the purchase money when due, the vendor declines to give a deed as contracted, on the ground that an incumbrance prevents, the purchaser may, without a formal tender, maintain a bill for specific performance.—Mathison v. Wilson, 87 Ill. 51.

[g] (Ill. 1898) Where a grantee paid the purchase price as a loan to another, to whom he agreed to convey the land, but afterwards openly refused to do so, the equitable owner, before bringing an action to establish the contract, need not tender payment, provided he alleges readiness to perform.—Scott v. Beach, 50 N. E. 196, 172 Ill. 273.

[h] (Ky. 1892) Where the vendee, in an action for specific performance of a contract to sell land, tenders the balance of a cash payment, and alleges that he has always been ready to pay the same, but that the vendor was a nonresident of the state, and had refused to comply with the contract, and had placed the land in question in the hands of another agent for the purpose of selling it to a party other than plaintiff, the facts pleaded are sufficient excuse for not paying or tendering the balance of the cash payment.—Tyler v. Onzts, 93 Ky. 331, 20 S. W. 256.

[i] (Me. 1855) Where an agreement in writing for the conveyance of land and payment of the purchase money was executed by both parties, but left in the hands of the vendor, under the stipulation that on payment of a certain sum by the vendee he should have a duplicate thereof, but the vendor refused to deliver the duplicate, such nondelivery was, under the circumstances of the case, a sufficient excuse for the vendee's failure to comply with the conditions of the contract as to the time of tendering the purchase money.—Hull v. Noble, 40 Me. 459.

[j] (N. J. 1898) A formal tender of the amount required by the decree to be paid by complainants as a condition precedent to a conveyance is unnecessary where defendant declares beforehand that she will not accept it.—McCormick v. Hickey, 42 Atl. 1019, 56 N. J. Eq. 848.

[k] (N. Y. 1866) A tender of performance need not be made where it would be wholly nugatory. So where a lessee, under a lease giving him the right to purchase, has shown his election to purchase by making permanent improvements on the premises to the value of several thousand dollars, and has provided himself with gold wherewith to make a tender, and there is strong reason to believe that a tender would have been wholly unavailing to induce the heirs of the lessor to execute a deed, one or more of them having previously declared their determination not to execute a deed, and their belief that they were not obliged to execute it, and where the facts further show that the premises are incumbered by a dower right and by a mortgage, it

Digitized by Google

was *held* that a strict tender of the purchase money was unnecessary.—Kerr v. Purdy, 50 Barb. 24, reversed (1872) 51 N. Y. 629.

[l] (N. Y. 1881) B., vendor, February 19th, agreed with A., purchaser, to deliver a deed April 1st, on receiving part payment and a bond and mortgage to secure the residue. They met April 1st, and A. handed to B. the bond and mortgage, and had a certified check for the cash payment called for. Neither party made a tender. B. claimed that he was entitled to interest on the whole purchase money from February 19th, and after leaving the room with his counsel for consultation, returned and offered to carry out the contract "according to its terms." He did not withdraw his construction thereof, nor propose to change the date of the deed. *Held*, that A. might maintain an action for specific performance without a formal tender.—Selleck v. Tallman, 87 N. Y. 106, affirming (1882) 11 Daly, 141.

[m] (N. Y. 1904) An offer in good faith to pay the purchase price being refused, is enough to authorize an action for specific performance; a tender or demand before suit affecting only costs.—Murray v. Harbor & Suburban Bldg. & Sav. Ass'n, 86 N. Y. Supp. 799, 91 App. Div. 397.

[n] (Ohio, 1862) As a general rule, a vendee of land, seeking to enforce a specific performance by the vendor, must tender or bring into court the amount due on the purchase money; but where the vendor denies the obligation of the contract, attempts to rescind it, resumes possession of the land, and is in receipt of the rents and profits thereof, he may maintain his action without such tender.—Brock v. Hidy, 13 Ohio St. 306.

[o] (Pa. 1895) Plaintiff did not lose his right to specific performance by failure to make a formal tender to defendants, where, long before expiration of plaintiff's option, he had notice that defendants would not give a deed of the property claimed by plaintiff to be embraced in the option, and defendants' attorney agreed that tender should be waived, and prepared an agreement to that effect for defendants to sign, and plaintiff had no notice that they refused to sign it till 4 p. m. on the last day of the option, when they tendered him a deed of the property which they claimed was covered by the option, and, on his saying that he was willing to take a deed of the property which he claimed, refused to make such a deed.—Shattuck v. Cunningham, 166 Pa. 368, 31 Atl. 136.

[p] (S. D. 1898) Where a party to a contract, to whom a tender is due, notifies the other that he would no longer be bound by the contract, no tender is required from the other as a condition to a suit for specific performance.—McPherson v. Fargo, 74 N. W. 1057, 10 S. D. 611, 66 Am. St. Rep. 723.

4. Inability of Vendor to Perform.

[a] (Cal. 1901) Defendant contracted to convey land to plaintiff free of incumbrance on payment of the purchase price on or before a certain day. Plaintiff had the money, and offered to pay the price before the day named, and demanded a conveyance; but defendant had not removed the incumbrances, and on the day after the date named conveyed to another. *Held*, that an actual tender by plaintiff was not necessary to enable him to maintain an action for specific performance, since defendant was then unable to perform.—Luchetti v. Frost, 65 Pac. 969, 133 Cal. xix.

[b] (Ill. 1843) It is not sufficient excuse for not tendering the purchase money of land by the vendee that the vendor had conveyed the land to another, when the same became payable.—Doyle v. Teas, 5 Ill. (4 Scam.) 202.

[c] (Ill. 1894) Where suit for specific performance is brought after the vendor has conveyed to another party, no tender of the purchase money need be made before suit, it being sufficient that the vendee is ready and offers to pay such money and to comply with the contract on his part.—Watson v. White, 152 Ill. 364, 38 N. E. 902.

[d] (Iowa, 1856) Where the vendor has conveyed to a third person, the vendee, though he did not pay at the day, need not tender until the filing of the bill, for the vendor is not entitled to the money, unless the second purchaser can be charged with notice so that the vendor can give a good title upon a decree against him.—Brink v. Morton, 2 Iowa (2 Clarke) 411.

[e] (Iowa, 1860) A petition for the specific performance of a contract for the sale of land, which alleges that plaintiff is willing to pay if he can get a

Digitized by Google

good title, is a sufficient tender to support the suit, where the obligor has sold the land in controversy and has died, and the rights of the plaintiff and the second vendee have not been judicially settled.—Laverty v. Hall's Adm'x, 19 Iowa, 526.

[f] (Iowa, 1897) Where the vendee was ready to perform before there was a forfeiture, but the vendor had conveyed the land to a third person, a tender by the vendee before bringing suit for specific performance was not necessary. —Auxier v. Taylor, 72 N. W. 291, 102 Iowa, 673.

[g] (Minn. 1870) Where a vendor of lands puts it out of his power to perform his contract according to its terms by conveying to a subsequent purchaser, the first vendee need not tender nor offer to perform the consideration on his part of the contract of sale, before bringing an action to compel specific performance.—Smith v. Gibson, 15 Minn. 89 (Gil. 66).

[h] (N. Y. 1872) A contract to sell and convey real estate can only be performed by giving a deed that will vest in the grantee an unincumbered title; and where the purchaser is prepared to pay the purchase money, but, in consequence of the title being incumbered, the vendor is unable to perform, the purchaser's rights under the contract are preserved without a tender of the consideration.—Delavan v. Duncan, 49 N. Y. 485.

II. Tender of Conveyance.

1. *In General.*

[a] (Ill. 1845) Where an obligor in a bond for the conveyance of land brings a bill in equity to compel a specific performance, he must bring his deed into court, to be placed within its control, and subject to its order.—Mason v. Richards, 8 Ill. (3 Gilman) 25.

[b] (Ill. 1888) In a suit for specific performance of a contract to convey lands, in consideration whereof complainant had agreed to preserve for defendants a right to certain other lands as a homestead, the evidence showed that the parties contemplated a right of homestead in government lands as secured by United States statutes. *Held*, that the contract was to procure for defendants the right to occupy the land as claimants of a homestead, and that a tender of performance was not necessary in order to maintain the suit, defendants having abandoned the contract before complainant could have obtained the stipulated right.—Dulin v. Prince, 124 Ill. 76, 16 N. E. 242.

[c] (Ind. 1865) Where land is sold by title bond, with a covenant to convey on the day that the note given for the proceeds matures, a suit will lie in equity on the note as for specific performance, though no deed is tendered on the day named in the contract.—O'Kane v. Kiser, 25 Ind. 168.

[d] (Iowa, 1856) A complaint seeking specific performance of an agreement to convey land need not make a tender of a deed.—Young v. Daniels, 2 Iowa (2 Clarke) 126, 63 Am. Dec. 477.

[e] (Iowa, 1889) Defendant promptly executed the contract which was the basis for the deed, and sent it to plaintiff to sign, but the latter never returned it, giving as an excuse that it had become defaced and blotted with ink. About six months later plaintiff sent defendant what purported to be copies of the original contract, but defendant did not sign them until more than a year later, giving as a reason for the delay that it had no copy of the original by which to determine whether plaintiff's copies were correct. *Held* that, as plaintiff had no reason for requiring the execution of these copies, the delay in obtaining them was no excuse for the delay in tendering the deed. —Chicago, R. I. & P. Ry. Co. v. Wisconsin, I. & N. Ry. Co., 76 Iowa, 615, 41 N. W. 375.

[f] (Kan. 1895) The vendor in a contract of purchase could not, after maturity of the last installment of the price, without payment thereof having been made, maintain an action for specific performance without tendering a conveyance.—Soper v. Gabe, 55 Kan. 646, 41 Pac. 969.

[g] (Ky. 1833) Where a vendor comes into equity to compel his vendee to receive a title, mere neglect to tender a deed, where the vendee is not injured by the delay, will not preclude the vendor from the aid of the chancellor.—Woodson's Adm'rs v. Scott, 31 Ky. (1 Dana) 470.

[h] (Miss. 1859) A vendor who has agreed to make title upon payment

Digitized by Google

must tender a deed and demand payment before bringing a bill for performance.—Klyce v. Broyles, 37 Miss. 524.

[i] (N. J. 1889) On bill brought by a vendor of land for the specific performance of the vendee's unilateral contract to pay the purchase price within a specified time, the complainant, not being bound, must show that he is not only willing to perform all the stipulations on his part, but that he has tendered performance before filing his bill.—Miller v. Cameron, 45 N. J. Eq. (18 Stew.) 95, 15 Atl. 842, 1 L. R. A. 554.

[j] (N. J. 1897) To entitle a vendor to a decree for specific performance, he must tender a proper deed in his pleading or previously; and such tender on the trial, which is inconsistent with his pleading, is insufficient.—Bidwell v. Garrison (N. J. Ch.) 36 Atl. 941.

[k] (N. Y. 1822) On a bill for specific performance of a contract for the sale of land, the plaintiff must show that he was able and ready to convey a good title at the day.—Seymour v. Delancey, 6 Johns. Ch. 222.

[l] (N. D. 1895) Where plaintiff contracted to sell land to defendant, taking notes for the purchase price, and sued on the notes after having quitclaimed the land to another, who conveyed it to defendant, the action on the notes is in equity for specific performance, making it necessary for plaintiff to tender a conveyance to defendant.—Shelly v. Mikkelson, 5 N. D. 22, 63 N. W. 210.

[m] (Ohio, 1890) A complainant is not entitled to a specific performance of a contract for the sale of realty, unless he tenders to defendant within a reasonable time after the sale of such realty a good title.—Ursuline Community v. Huneke, 11 Ohio Dec. 30.

[n] (Pa. 1845) Delivery or tender of a deed is not necessary before bringing his action, by a vendor, to compel specific performance by the vendee.—Hawk v. Greensweig, 2 Pa. (2 Barr) 295.

2. Where Plaintiff is Assignee or Personal Representative of Vendor.

[a] (Ky. 1838) A. sold a tract of land to B., a conveyance to be made on payment of the second installment. A. became insane before the time arrived in which he was to convey, and died, leaving a widow and infant heirs, and a deed was made under order of court. On a bill filed by the administrator and heirs of A. for specific execution, it was *held* that the fact that the complainants had not conveyed was no objection to the bill.—Boyce v. Pritchett's Heirs, 36 Ky. (6 Dana) 231.

[b] (Ky. 1849) Land was sold to be paid for in installments, and a deed to be given on the payment of the last installment. The vendees entered and enjoyed possession of the land, and the last installment was paid to the administrator of the vendor. The vendees brought an action at law to recover the purchase money for a breach of the covenant to convey. *Held*, in a bill in equity by the heirs of the vendor to enjoin the judgment at law and to compel specific performance, that, as there was no default in the vendor during his life, and the heirs were infants at the time of the judgment, and unable to convey, and as the vendees had not been injured by the want of a conveyance, the heirs, on completing their title, should convey the land to the vendee.—Nesbit v. Moore's Heirs, 48 Ky. (9 B. Mon.) 508.

[c] (Ky. 1891) Where an administrator seeks to enforce a land contract made by his intestate he need not actually tender the deed to the purchaser, it being sufficient for him to show that he is able and willing to make the deed upon payment of the purchase money.—Faulkner's Adm'r v. Williman, 16 S. W. 352, 13 Ky. Law Rep. 106.

[d] (Miss. 1874) To a bill by an assignee of a note for the purchase money of land, against the vendor and vendee or their respective representatives, to enforce the lien and for specific performance of the contract of sale, it is no objection that a deed was not tendered; for the title does not reside in the complainant, and he can reap the benefit of his equity only by demanding that the parties to the contract of sale shall be held to the performance of their respective covenants.—Kimbrough v. Curtis, 50 Miss. 117.

[e] (Miss. 1879) The assignee of a note for the purchase money of land for which a title bond has been given can maintain a bill for specific performance against the representatives of the vendor and vendee, without tendering a deed.—Boyce v. Francis, 56 Miss. 573.

Digitized by Google

3. Dependent Agreements and Concurrent Acts.

[a] (U. S. 1902) Where a contract for the sale of property consisting of both personalty and realty provided that the purchaser should divide the consideration between the two deeds to be made, and should furnish the vendor with forms for such deeds, which it refused to do on demand, the vendor was not bound to tender a deed, as a condition precedent to the commencement of a suit for specific performance.—Blanton v. Kentucky Distilleries & Warehouse Co., 120 Fed. 318.

[b] (Ind. 1861) The doctrine that specific performance of a contract for the purchase and sale of land may be enforced where the vendor is able to perfect title at the rendition of the decree does not apply to excuse a party from diligence in fulfilling his contract or from tendering a deed, made a condition of a right to sue; it applies where a deed has been tendered and possession given, but a secret defect in the title, previously unknown, perhaps, to either party, is discovered.—Cook v. Bean, 17 Ind. 504.

[c] (Ind. 1903) A purchaser of real estate under a contract stipulating for certain payments by him, for the execution of a deed by the grantor, and for the giving of a note for the balance of the purchase price, secured by a mortgage, may enforce specific performance without making or offering to make the note and mortgage, the execution of the deed and the execution of the note and mortgage being concurrent acts.—Kepler v. Wright, 68 N. E. 618, 31 Ind. App. 512.

[d] (Iowa, 1861) A vendor of real estate, seeking performance and foreclosure of a contract containing mutual and dependent covenants, is not required in equity to tender a deed to the vendee before filing his bill.—Rutherford v. Haven, 11 Iowa, 587.

[e] (Miss. 1856) A vendor who has given a bond to make title on payment by the vendee of notes given for the purchase money will not, by the failure of the vendee to pay the notes precisely at maturity, be discharged from his liability to perform without an offer of performance, for the covenants are mutual and dependent.—Walton v. Wilson, 30 Miss. 576.

[f] (N. Y. 1837) Under a contract for the sale of real estate, where the payment of the purchase money and the giving the deed are to be concurrent acts, the vendor need not tender a deed before payment or tender of the purchase money, in order to entitle him to avail himself of the nonpayment by the vendee, in defense of a suit for specific performance.—Wells v. Smith, 7 Paige, 22, 31 Am. Dec. 274.

[g] (Or. 1887) Where an agreement for sale of land is to the effect that vendee agrees "to purchase of said vendor, and pay said vendor, on or before the expiration of said term, the [price] for all said property," and that, "on the said payment of said vendee, * * * the said vendor contracts and agrees to make and deliver to the said vendee a good and sufficient deed," the covenants are dependent and concurrent; and, where the vendor fails to tender his deed at the time fixed for the performance of the agreement, he cannot afterwards recover of the vendee for nonperformance.—Powell v. Dayton, S. & G. R. Co., 14 Or. 356, 12 Pac. 665.

4. Effect of Possession by Purchaser.

[a] (Ind. 1864) Under the Code, if the complaint in a suit upon a written contract for the purchase of land, to recover the purchase money, alleges that the defendant has taken possession, under the contract, of the land sold, and still holds the same, and refuses to surrender it to the plaintiff, the latter is entitled to recover, although he did not tender a deed when the purchase money became due; the acts of the defendant alleged being an acquiescence in such failure.—Emmons v. Kiger, 23 Ind. 483.

[b] (N. J. 1900) Under a contract for the sale of land, providing that upon payment of the purchase money a deed shall be delivered, it appearing that the vendor has put the vendee into possession, and has always been ready to deliver the deed; that the vendee knew this, but has refused and failed to pay the purchase money—an actual tender of the deed by the vendor is not a necessary preliminary to the filing of a bill for specific performance.—Brown v. Norcross, 45 Atl. 605, 59 N. J. Eq. 427.

Digitized by Google

[c] (Tex. 1888) A. and B. were partners engaged in milling, and, being unable to meet their liabilities, A. agreed to convey the mill property to B. in consideration that the latter would pay on the partnership debts, if necessary to discharge them, a stipulated sum. B. went into possession of the property. *Held*, that he could not refuse to perform his part of the agreement because the deed of the mill property was not delivered; it appearing that, although a tender was not made until after suit was brought, A. had always been ready to execute the deed, and B. had never demanded it.—Buford v. Ashcroft, 72 Tex. 104, 10 S. W. 346.

5. Refusal of Purchaser to Perform.

[a] Where a vendee announces that he will not comply with his contract, the vendor need not tender a deed before suing for specific performance.

—(U. S. 1902) Blanton v. Kentucky Distilleries & Warehouse Co., 120 Fed. 318;

(Ill. 1885) Lyman v. Gedney, 114 Ill. 388, 29 N. E. 282, 55 Am. Rep. 871;

(N. Y. 1848) Crary v. Smith, 2 N. Y. (2 Comst.) 60;

(R. I. 1898) Lee v. Stone, 42 Atl. 717, 21 R. I. 123;

(S. D. 1892) Brace v. Doble, 3 S. D. 110, 52 N. W. 586.

[b] (Ill. 1895) Where a vendee objects to the vendor's title, the latter is not obliged to tender a deed in order to enforce his rights under the contract of sale, since a tender need never be made where it is clear that, if made, it would be refused.—Bucklen v. Hasterlik, 155 Ill. 423, 40 N. E. 561, affirming (1893) 51 Ill. App. 132.

[c] (Ill. 1899) It is not necessary to make a tender of performance on a day fixed, where the opposite party abandons the contract or refuses to perform it on his part before such date.—Young v. Jordan, 80 Ill. App. 559.

[d] (Kan. 1895) That one of several vendees in a contract for the purchase of land stated to the vendor, after maturity of the last installment of the price, and before payment thereof, that the vendees had concluded not to take the land, was not sufficient to dispense with a tender of conveyance by the vendor before suing to enforce the contract.—Soper v. Gabe, 55 Kan. 646, 41 Pac. 969.

[e] (N. J. 1834) It is not necessary that a vendor should execute and tender a deed to the vendee, in order to entitle him to specific performance of the contract, where he is present at the time and place appointed for delivering it, and the vendee then positively declines and refuses to receive a deed.—Maxwell v. Pittenger, 3 N. J. Eq. (2 H. W. Green) 156.

[f] (Ohio, 1899) Where it is plain that if a deed had been formally tendered by the vendor it would have been rejected, so that the tender would have been a useless ceremony, and where it appears that the vendor was strenuously insisting that the contract be carried out, such tender of a deed is not necessary in order to put the vendee in default, and is not a condition precedent to an action for specific performance of the contract.—Eleventh Street Church of Christ v. Pennington, 18 Ohio Cir. Ct. R. 408, 10 O. C. D. 74.

Digitized by Google

(132 Fed. 801.)

ILLINOIS CENT. R. CO. v. COUGHLIN.

(Circuit Court of Appeals, Sixth Circuit. October 21, 1904.)

No. 1,305.

1. MASTER AND SERVANT—RAILROADS—DUTY OF INSPECTION.
A railroad company, which adopts the customary and approved means or tests for the discovery of defects in its appliances, discharges its duty to its employés in that regard, and an injury which occurs to an employé notwithstanding must be accepted as resulting from one of the risks of the occupation.

2. SAME—INJURY OF SERVANT—LATENT DEFECT IN APPLIANCE.
Where the nut on the bolt which fastened one end of a handhold on a car either came off when an employé took hold of the handhold, or had previously worked off, by reason of which the employé fell and was injured, and on the trial of an action to recover for the injury there was uncontradicted testimony of the inspector that the nuts were on and screwed down on the night previous, it was prejudicial error to refuse or to qualify an instruction that the defendant company would not be liable if the handhold pulled loose by reason of the nut coming off, and there was nothing to indicate a weakness or defect in the same, and it would not have been ascertained by ordinary care in inspecting the same.

In Error to the Circuit Court of the United States for the Western District of Tennessee.

Francis Fentress, Dist. Atty., and C. G. Bond, for plaintiff in error.
Thomas McCorry and James E. Pope, for defendant in error.

Before LURTON, SEVERENS, and RICHARDS, Circuit Judges.

LURTON, Circuit Judge. This is an action for personal injury sustained by the defendant in error while in the service of the plaintiff in error as a switchman. There was a jury, and verdict and judgment for the plaintiff below. The plaintiff, while assisting in switching operations in the yard of the company at McComb City, Miss., attempted to climb upon a passing freight car by grasping the iron handhold on the side. One end of this pulled off the bolt which attached it to the car, and the plaintiff was thrown under a wheel. The question upon which the case turned was whether this handhold had been originally properly secured, and, if so, whether in such case the company had exercised due care in keeping same in safe condition for use.

There was evidence tending to show that the safe and usual way of fastening such a handhold was by bolts running through the wood, with a head on one end and a nut on the other, and that it was not safe to attach such a handhold with a lag screw, a screw with a sharp point on one end and a head at the other. There was some conflict in the evidence as to whether this handhold was attached by a bolt or a lag screw, though the great weight of evidence was that it was attached by a bolt. There was evidence that this car had been overhauled and put in complete order about one month before this accident, and that this

¶ 1. See Master and Servant, vol. 34, Cent. Dig. §§ 238, 240, 242.

Digitized by Google

handhold was then properly and safely attached and in good order. There was also evidence that the car had been inspected the night before, and the handhold found in good condition; the inspector testifying that there was nothing to indicate any defect in the handholds and that he found this handhold fastened at both ends by bolts and nuts screwed on the ends, and that the taps and nuts were on the ends of the bolts and screwed down solid to the handhold. Within about eight hours thereafter, and before the car had been moved out of the yard where the inspection had been made, this handhold became detached at one end; the nut having been either taken off or having worked off of the head of the bolt.

The uncontradicted evidence is that, within a few minutes after the injury to Coughlin, a careful examination was made, and the nut found to be off. The thread on the bolt did not show wear, and was yet bright. If the nut was in fact on and screwed down solid to the handhold when examined by the company's inspector a few hours before, there is no fact in evidence which tends to explain the accident. Counsel have conjectured that it may have jostled off from the movement of the car around the yard during switching operations, and that there may have been some hidden defect in the threads of the bolt or the nut. In confirmation of this theory there was evidence that a new nut put on at once was found off of this bolt a few hours later, and after the car had traveled but a little more than 50 miles. It has also been conjectured that the nut may have been taken off for some evil purpose, but there is no fact in the record which supports this, other than the difficulty of reconciling the uncontradicted evidence of the inspector with the fact of the coming off of this handhold. It is again conjectured that the inspection was not carefully made, and that the nut must have been off, or in a condition to easily work off, which condition should have been discovered by a proper inspection.

A railroad company is under obligation to use ordinary care in providing its employés with reasonably safe tools and appliances with which to do their work, and under like obligation to keep same in reasonably safe repair, and neither duty can be avoided by imposing it upon some one of its servants. Felton v. Bullard, 94 Fed. 781, 37 C. C. A. 1. But this obligation falls far short of a guaranty that such tools, machinery, or appliances are absolutely safe. Washington & G. R. Co. v. McDade, 135 U. S. 554, 570, 10 Sup. Ct. 1044, 34 L. Ed. 235; Patton v. T. & P. Ry. Co., 179 U. S. 658, 21 Sup. Ct. 275, 45 L. Ed. 361. Nor is a railroad company under the duty of using unusual or extraordinary care in keeping its equipment or tools in repair. The measure of its duty to an employé is that of ordinary care. If it adopts the ordinary, customary, and approved means or tests for the discovery of defects in its appliances, such as are customarily used by prudently conducted companies, it will discharge its duty, and the employé who sustains an injury notwithstanding must bear the loss as one of the risks of the occupation. Texas & P. Ry. Co. v. Barrett, 166 U. S. 617, 17 Sup. Ct. 707, 41 L. Ed. 1136.

Neither does the fact that this handhold broke loose from its attachment and caused an injury to the plaintiff carry with it any presumption of negligence against the company. That the company had been guilty

Digitized by Google

of originally furnishing a defective appliance, or of negligence in keeping it in a reasonably safe condition for use, are affirmative facts which it was incumbent on the injured plaintiff to establish. Texas & P. Ry. Co. v. Barrett, 166 U. S. 617, 17 Sup. Ct. 707, 41 L. Ed. 1136; Patton v. T. & P. Ry. Co., 179 U. S. 658, 663, 21 Sup. Ct. 275, 45 L. Ed. 361. Neither is it enough for the injured employé to show that the injury may have been the result of the negligence of the employer, or may have been the result of some cause for which the employer was not responsible. The burden of proof being upon him, he must be able to show that the injury was the consequence of the negligence of the employer. As put by the Supreme Court in Patton v. T. & P. Ry. Co., cited above:

"When the testimony leaves the matter uncertain, and shows that any one of a half dozen things may have brought about the injury, for some of which the employer is responsible and for some of which he is not, it is not for the jury to guess between these half dozen causes, and find that the negligence of the employer was the real cause, when there is no satisfactory foundation in the testimony for that conclusion. If the employé is unable to adduce sufficient evidence to show negligence on the part of the employer, it is only one of the many cases in which the plaintiff fails in his testimony, and no mere sympathy for the unfortunate victim of an accident justifies any departure from settled rules of proof resting upon all plaintiffs."

It devolved upon the plaintiff to show either that this handhold had been improperly and unsafely attached, or that the employer had not exercised due care in keeping it in reasonably safe condition for use.

The first he sought to make out by evidence that the appliance was attached to the side of the car by a lag screw, when it should have been fastened by bolts. The court below expressed the opinion that the lag screw theory had not been established. But, as there was a positive conflict of testimony upon this question, it was at least one for the jury. Upon the second point the case turned upon the care with which this car had been inspected the night before. If the nut worked off of the head of the bolt as a consequence of some defect which could not have been observed or detected by such care in examination and inspection as might be reasonably exercised, having regard to the character and hazards of the business and the custom of other companies, managed with reasonable care and caution, the plaintiff would have no case, and the jury should have been so instructed with explicitness.

Neither would the jury be justified in arbitrarily setting aside the uncontradicted evidence of the inspector that the nuts were on the ends of the bolts the night before, "and screwed down solid to the handholds." If this was true, the nut must have worked off through some defect in the bolt or nut, or been taken off willfully. Unless the testimony of the inspector was impeached in some way known to the law, there was no legal ground for rejecting it, and this the court should have said to the jury. If the nut was upon the bolt when Coughlin grasped the handhold, what was the defect in either which produced the accident? If the jury find such defect, was it one which should have been discovered by the exercise of that degree of care in inspection which is practiced by a company prudently managed? This question was not put to the jury in any such clear and pointed way as the interests of justice would seem to require. The learned trial judge recog-

Digitized by Google

nized this to be the turning point of the case, and at one point in his charge said:

"If it was a hidden defect, so concealed in the nature of the structure, if the defect was so concealed and so hidden that an ordinarily prudent and careful man would not observe it when they put it on or when they inspected it, then this railroad company could not be held liable."

There followed the paragraph quoted a long discussion of other matters. At the conclusion of the charge the defendant below requested the following:

"If you find that the handhold pulled loose by reason of the nut coming off, and you find that there was nothing to indicate a weakness or defect in the same, and that it would not have been ascertained by ordinary care and caution in inspecting same, then the defendant would not be liable."

This was the plain law of the case, and covered the very question upon which the case turned, and should have been given as requested. This the court did not do; for it was modified, and given in these words:

"If you find that the handhold pulled loose by reason of the nut coming off, and you find that there was nothing to indicate a weakness or defect in the same, and that it would not have been ascertained by ordinary care and caution in inspecting same, *and that there was an inspection with ordinary care, caution, and skill a few hours before the accident*, then the defendant would not be liable."

The interpolated modification is indicated by italics. The request went to the character of the defect which caused the nut to come off. If it came off as a result of some weakness or defect not discoverable by the exercise of ordinary care, the plaintiff failed to show negligence, irrespective of the question of any inspection at all. As given, the charge was not consistent, and was calculated to mislead and confuse the jury.

That the request had been given in substance in the original charge does not cure the error. There are cases where an inexact statement of the law in one portion of a charge can be regarded as corrected by another and more correct statement. But to make the erroneous statement harmless we must be satisfied that the jury could not have been reasonably misled. A correct statement of the law upon the precise point was so vital to a proper determination of the real issue in the case that we feel we cannot pass this matter as harmless. We do not find it necessary to pass upon any of the other matters assigned as error, and content ourselves with indicating the general line upon which we think the trial of this case should proceed, having agreed upon a reversal on account of the seventh assignment of error only; same being the assignment of error for refusal to give the request above referred to.

Judgment reversed.

Digitized by Google

(130 Fed. 703.)

G. W. COLE CO. v. AMERICAN CEMENT & OIL CO. et al.

(Circuit Court of Appeals, Seventh Circuit. April 12, 1904.)

No. 983.

1. TRADE-MARKS—INFRINGEMENT AND UNFAIR COMPETITION DISTINGUISHED.

Unfair competition is distinguishable from infringement of a trade-mark, in that it does not necessarily involve the question of the exclusive right of another to the use of the name, symbol, or device copied or imitated. A word may be purely generic or descriptive, and so not capable of becoming an arbitrary trade-mark, and yet there may be an unfair use of it which will constitute unfair competition.

2. SAME—INFRINGEMENT.

A trade-mark for an oil compounded from a secret formula, and used for a lubricant, rust preventer, and a polish, consisting of the words "Three in One" printed in black letters, and the picture of the figure "1" in red on a white background, upon which are superimposed in white the figure "3" and the word "in," is not infringed by a trade-mark used for a similar oil consisting of the words "Big Four" in red, and the picture of a large figure "4" in blue, superimposed upon a rectangular background in red, containing other descriptive words in blue and white letters.

3. SAME—UNFAIR COMPETITION.

The fact that a defendant which had been engaged in the manufacture and sale of oil in bottles for 20 years adopted for a new product a label wholly distinctive from those previously used is no evidence of a fraudulent intention to compete unfairly with complainant, which had placed on the market a similar article, where its prior labels were also distinctive from each other, and the new product was different in quality from any it had previously made.

4. SAME.

The law of unfair competition seeks only to restrain fraudulent practices inducing confusion of goods and deception of the public, and it cannot be used to prevent a defendant from adopting a trade-mark or label intended to attract attention and popularize its product, although it results, and is intended to result, in better enabling it to compete with complainant, where no deception or confusion of goods is caused or intended thereby.

5. SAME.

The fact that a defendant has been, and still is, a large purchaser of an article made by complainant as a jobber, does not create any trust relation between them which precludes it from placing on the market a competing article of its own manufacture.

6. SAME.

That defendant issued a circular advertising an article of its manufacture to some extent similar to one issued by complainant, and inclosed in the cartons containing its goods, does not constitute unfair competition, where defendant's circulars are not so inclosed, and are sent only to jobbers, and do not come into the hands of retail purchasers.

7. SAME.

Labels and cartons used by complainant and those subsequently adopted by defendant compared, and *held* not to show such similarity as to charge defendant with unfair competition.

8. SAME.

Unless a defendant adopts means calculated to injure complainant through unfair competition, the intention is immaterial; there being no ground for relief where there has been no injury.

Appeal from the Circuit Court of the United States for the Northern District of Illinois.

¶ 1. Unfair competition, see notes to Scheuer v. Muller, 20 C. C. A. 165; Lare v. Harper & Bros., 30 C. C. A. 376.

Digitized by Google

In the year 1894 the firm of G. W. Cole & Co. began the manufacture of a compound oil according to a secret formula. The oil was a lubricant, rust preventer, and polish. They adopted as a trade-mark and name the designation "Three in One," cast in the form of a large figure "1" in red, upon which was superimposed in white the numeral "3" above the word "in." This cipher was later molded in the glass of the bottles containing the compound. The device was new, the product largely advertised, met with large sales, and became well known throughout the country under the name of "Three in One," identified by that name and by the distinctive device stated. The bottles were inclosed in pasteboard cartons, which bore conspicuously upon the front panel a picture of the bottle inclosed therein; the conspicuous colors being red, black, and greenish yellow upon a white background. For some time a circular had been inclosed in each carton, which consists of pictures of various articles, typewriters, skates, guns, phonographs, etc., for which the preparation is intended, accompanied with descriptive and commendatory notices. The appellant here (complainant below) was organized as a corporation, and succeeded to the business of the copartnership, taking over its assets and good will. The appellant does not sell at retail, but supplies its product to wholesalers and jobbers in the various cities in the country, who in turn furnish the article to the retailer.

The appellee the Excelsior Supply Company, of which the appellee George T. Robie is president, deals in bicycle parts and sundries in the city of Chicago. The appellee the American Cement & Oil Company, of which Mr. Robie also is president, manufactures lubricating and other oils and cement. The Excelsior Supply Company for some four or five years has acted as a jobber, and has been a customer of the appellant, purchasing at wholesale its oil, and has sold large quantities of this product, "Three in One," and still continues so to act and sell. In the year 1901 the appellees (defendants below) put upon the market a compound oil called "Big Four," claimed to be identical in color and odor with "Three in One," and put up in bottles claimed to be of the same general design and appearance, but of slightly larger size, the labels of which are claimed to be a close approximation to the appellant's label. The bottles are inclosed in pasteboard cartons, with a picture of the bottle on the outside claimed to closely simulate the carton of the appellant; the label of the appellees having a white background, and a large figure "4" in blue superimposed upon a rectangular red background, and the word "Big" in white superimposed upon the figure "4." An advertising circular was also put out by the appellees, somewhat similar in design to the advertising circular of the appellant, containing 19 different cuts, as against 17 in appellant's circular; four of the cuts in the one being identical with the cuts of the other circular, and many of the others resembling the cuts in the circular of the appellant. The Excelsior Supply Company had been in the manufacture and sale of oils of various kinds for a quarter of a century, and had during that time used different names therefor. The bottles, labels, and style of the "Big Four" product were a radical departure from anything previously used by it. The bottle used by the appellant, containing its compound, holds 3 ounces, is 5½ inches in height, 1⅞ inches in width, and 1⅛ inches in thickness, the neck being 1 inch in length, and both surfaces flat. It is of special mold, and not an ordinary stock bottle. It has blown in the glass on one edge "G. W. Cole Co.," and on the other edge "Three in One." The bottle used by the appellees holds 4 ounces, is 5⁶/₈ inches in height, 2 inches in width and 1⅜ in thickness at its broadest part, and the neck of the bottle is 1¼ inches in height, the front surface being convex. The bottle is known in the trade as a "4-ounce Blake oval bottle," and is a stock bottle manufactured by nearly every bottle factory in the country. In the autumn of 1901 the appellant began to put up a small 1-ounce package—a duplicate of its larger one, except as to size. In the winter following the appellees also put up a 1-ounce package, but without knowledge that the appellant had so done, using these small bottles simply as samples. They are not regularly sold. All of these kinds of bottles had been used by the appellees in their business for years before they had any dealings with the appellant.

A better idea of the two labels may be had by a comparison, and they are for that purpose here exhibited:

Digitized by Google

Digitized by Google

APPELLANT'S FRONT LABEL.

APPELLEES' FRONT LABEL.

Digitized by Google

APPELLANT'S BACK LABEL.

"LITTLE GOES FAR"

HOW TO USE

"3 in 1" Oil

TO CLEAN, rub parts with soft cloth moistened sparingly with "3 in 1."

TO POLISH (*after cleaning with "3 in 1"*), rub surface until dry, with a soft, clean cloth.

IT CLEANS AND POLISHES

Producing a brilliant lustre on Bicycles, Firearms, Typewriters, Sewing Machines; Pianos, Furniture, Woodwork; Enameled, Nickeled and Varnished surfaces.

It Cleans and Removes all Residue in Gun Barrels after Shooting.

IT PREVENTS RUST

IN ALL CLIMATES

To prevent rusting or tarnishing of Nickel, Steel and Metallic surfaces leave on a thin coating of "3 in 1."

IT LUBRICATES

The Bearings and Mechanism of Bicycles, Firearms, Typewriters, Sewing Machines, Reels, Skates, Locks, Clocks, Phonographs, Musical and Scientific Instruments, and anything requiring oil.

GUARANTEED NOT TO GUM NOR HARDEN

CONTAINS NO ACIDS

APPELLEES' BACK LABEL.

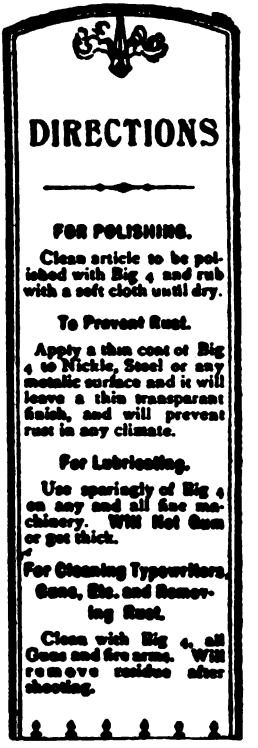

Digitized by Google

Digitized by Google

Other facts essential to be considered are stated in the opinion of the court. The bill was filed upon the double ground of trade-mark infringement and of unfair trade. The court below at the hearing dismissed the bill for want of equity; finding that the one trade-mark does not infringe the other, and, upon the contention of unfair competition, that it was not proven that any one had been deceived, or that there had been any attempt to deceive, or to simulate the goods of the complainant. The decree is brought here for review.

Frank F. Reed, for appellant.

Harrison Musgrave, for appellees.

Before JENKINS, GROSSCUP, and BAKER, Circuit Judges.

JENKINS, Circuit Judge (after stating the facts as above). We are to consider this case, as the bill presents it, to involve the charge both of an infringement of a trade-mark and of unfair competition in trade. The two are sometimes confounded, yet they are distinctive, and the distinction ought not to be lost sight of. A trade-mark is an arbitrary, distinctive name, symbol, or device, to indicate or authenticate the origin of the product to which it is attached. An infringement of such trade-mark consists in the use of the genuine upon substituted goods, or of an exact copy or reproduction of the genuine, or in the use of an imitation in which the difference is colorable only, and the resemblance avails to mislead so that the goods to which the spurious trade-mark is affixed are likely to be mistaken for the genuine product; and this upon the ground that the trade-mark adopted by one is the exclusive property of its proprietor, and such use of the genuine, or of such imitation of it, is an invasion of his right of property.

Unfair competition is distinguishable from the infringement of a trade-mark in this: that it does not involve necessarily the question of the exclusive right of another to the use of the name, symbol, or device. A word may be purely generic or descriptive, and so not capable of becoming an arbitrary trade-mark, and yet there may be an unfair use of such word or symbol which will constitute unfair competition. Thus a proper or geographical name is not the subject of a trade-mark, but may be so used by another unfairly, producing confusion of goods, and so come under the condemnation of unfair trade, and its use will be enjoined. The right to the use of an arbitrary name or device as indicia of origin is protected upon the ground of a legal right to its use by the person appropriating it. The doctrine of unfair competition is possibly lodged upon the theory of the protection of the public whose rights are infringed or jeopardized by the confusion of goods produced by unfair methods of trade, as well as upon the right of a complainant to enjoy the good will of a trade built up by his efforts, and sought to be taken from him by unfair methods. Whether such confusion has been or is likely to be produced by the acts charged, is a question of fact to be resolved either by evidence of actual sales of the one product for the other, of actual mistake of one for the other, of fraudulent palming off of the one for the other, or, on the other hand, failing such evidence, by comparison of the two brands to determine whether the one can be readily mistaken for the other, even by the inattentive and unobserving retail purchaser. We must therefore review this record in the two lights of alleged infringement and alleged unfair competition.

Digitized by Google

1. Is the complainant's trade-mark infringed by the one adopted by the defendant?

The distinctive characteristics of the appellant's trade-mark inhere in the name "Three in One," and the picture of the figure "1" in red, upon which are superimposed in white the figure "3" and the word "in." As we observe in Pillsbury v. Pillsbury-Washburn Flour Mills Company, 64 Fed. 841, 12 C. C. A. 432, "A specific article of approved excellence comes to be known by certain catchwords easily retained in memory, or by a certain picture which the eye readily recognizes." Nothing could be simpler than the catchwords of this trade-mark, "Three in One," suggestive of the theological doctrine of the Trinity. Nothing could, we think, be more apt to win attention than the simple and attractive picture of the large figure "1" in bright red, with the white figure and letters "3" "in" superimposed upon it. These would catch the eye of the most unwary and unobservant person, and indicate the article he desired. The trade-mark of the appellees consists of the words "Big Four"—the picture of a large figure "4" in blue, superimposed upon a rectangular background in red, with lettering in blue around the four sides; the name "Big Four" being in red lettering, as contradistinguished from the black lettering of the appellant. The remaining part of the label consists of letters in red and in blue in irregular curved lines, as contrasted with the black lettering upon that of the appellant's bottle. The back label upon the appellant's bottle will be seen, by comparison of the marks, to be equally distinguishable. In the latter there are no letters or figures in red, as upon the former. Taken as a whole, we perceive no similarity between these two trade-marks that, even with the slight care which the ordinary purchaser exercises, would mislead. The one is clear, imposing, attractive. The other is ornate, involved, confusing. Nor is there idem sonans in the words "Three in One" and "Big Four," tending to confuse the unwary purchaser. The one is not suggestive of the other. They are "dissimilar in sound, appearance, and suggestion." We do not overlook the fact that the ordinary purchaser at retail is without the opportunity of comparison; but we cannot comprehend that even a careless purchaser, having in mind the catchwords "Three in One," having in mind the white letter "3" superimposed upon the red figure "1," could be confused or deceived by the package bearing the catchwords "Big Four," and the figure "4" in blue superimposed upon a red rectangle, with all the other differences in the makeup of the label. It seems to us improbable, unless by some device or fraud the one is imposed upon him for the other by a designing seller, which latter act would be involved in the question of unfair competition, not in that of infringement of trade-mark. Within our ruling in Sterling Remedy Company v. Eureka Chemical & Manufacturing Company, 80 Fed. 105, 25 C. C. A. 314, and Postum Cereal Company, Limited, v. American Health Food Company, 119 Fed. 848, 56 C. C. A. 360, we are unable to consider the term "Three in One" to be infringed by the term "Big Four," or that the coloring or dress of the figure "4" in the latter is suggestive of the figures "3" and "1" in the former. In the case first cited we held the term "No-To-Bac" to be not infringed by the term "Baco-Curo," and in the latter case that the term "Grape-Nuts" is not infringed by

Digitized by Google

the term "Grain-Hearts." In each of these cases the name complained of is more nearly suggestive of the trade-mark claimed to be infringed than in the case here. The term "Big Four" is the popular name of a railway, associated in the popular mind with that road. It is wholly wanting in suggestion of "Three in One." We are constrained to the conclusion that the appellant's trade-mark is not infringed by the device complained of.

2. Have the appellees been guilty of unfair competition, resulting in confusion of goods, to the injury of the public, or to the invasion of the appellant's legal rights?

The affirmative of this proposition is asserted by the appellant, and it rests with it to prove that affirmative satisfactorily. It is asserted that unfair competition is shown in several particulars: (a) That for many years prior to the adoption of the "Big Four" label, the appellees had manufactured and marketed several kinds of oil under different brands and distinctive names, and in packages altogether distinct from the appellant's, and adopted the one in question in imitation of the appellant's. (b) That the appellees adopted the device "Big Four" expressly to compete with the product "Three in One"; that the appellees were known throughout the trade as distributers of the appellant's product "Three in One," and practically occupied some sort of trust relation to the appellant. (c) That the appellees' circular was in part, at least, copied from, and was an imitation of, the appellant's circular; that the color and the odor of the two products are the same, and the identity was so caused for the purpose of deception. (d) That the product "Big Four" at once became known as "Four in One," and so has caused confusion in goods.

(a) With respect to the first of these assertions it is sufficient to say that while the label "Big Four" is distinctive, and perhaps widely so, from the numerous labels theretofore used by the appellees during 20 years of business, the previous labels are also easily distinguishable from each other. It is the purpose of the originator of a label to produce one which is in a marked degree dissimilar from any other; one that shall catch the eye and remain in the memory of a proposing purchaser; a label that shall stand apart by itself, distinguished from and unlike any other. It must also be borne in mind that the quality of this oil, "Big Four," was of a different grade and of higher excellence than any other oil theretofore manufactured and put upon the market by the appellees. It was compounded by a secret formula known only to them. It was natural, therefore, and proper, that they should seek an entirely distinctive brand to mark that particular quality of oil. We perceive nothing in this circumstance indicating fraud, or disposition to obtain advantage of the appellant by unfair means.

(b) It is shown that the name "Big Four" was selected because the oil was contained in a four-ounce bottle, and because the name was popularly known at the West in connection with a railway. It thus identifies the particular oil by the size of the bottle containing it, and attracts attention by giving it the catch name of a popular railway. If adopted for the purpose of giving popularity to the product, and enabling the appellees to compete with the product of the appellant, that is not objectionable in morals or in law, unless, by reason of their re-

Digitized by Google

lations to the appellant, the appellees are bound to refrain from such competition. The law of unfair trade has never gone to the length of preventing fair competition in trade. The law seeks only to restrain fraudulent practices inducing confusion of goods and deception of the public. There is nothing in the relation of these parties which prohibited such competition. The Excelsior Supply Company was a customer of the appellant, buying largely of its product "Three in One." It had special terms from the appellant, as had all its large customers; but that course of business created no trust relation between them, and constitutes no objection to competition.

(c) With respect to the question of alleged identity of color and odor, we have little difficulty. Oil of the same odor had been manufactured and sold by the appellees for many years. A large number of oils have the same color. It is the ordinary color for oils of that character. The odor is caused by the oil of citronella, used to suppress the odor of the oil in its original condition. Its use is common, and had been for many years. It had been used by the appellees for the like purpose for upwards of 20 years.

Coming next to the circular: The arrangement of the folders is quite distinct. On the first page of the appellant's circular is the figure of a woman standing at a sewing machine with upraised hand pointing to a bottle of "Three in One," and the seven reasons stating the supposed excellence of that oil are printed thereon. All this is in prominent red print. No such, or any, picture appears upon the appellees' circular. On the fourth page of the appellant's cirular are two parallelograms, with red ornamental border and white center, and upon the latter is printed, in large letters in red, "IT'S OIL RIGHT." No such, or any, picture appears upon the appellees' circular. The third and fourth pages of appellant's circular contain pictures in parallelograms, irregularly distributed over the sheet, of a clock, a reel, a bicycle, a piano, and other articles and machines, with letterpress indicating the supposed excellent uses of the oil. At the right of the fourth page is a picture of the bottle "Three in One," with the labels upon it. The appellees' circular is composed of two pages, having at the right of the first page a representation of a bottle of "Big Four" oil, and a blank underneath it, with the heading, "For sale by." It then has cuts of different instruments upon which the oil can be used profitably, and with its uses specified. Three of these cuts are identical with the cuts in the appellant's circular, and were taken from its circular. Of the 19 cuts in the appellees' circular, 16 were obtained from catalogues of traders in Chicago. All these cuts were of the ordinary trade forms, and the record discloses from whom they were obtained. The witness who got up this circular testifies that he took the three from the appellant's circular, supposing that they were public property, in the same way he took the cuts from other circulars. With the exception noted, the circulars are dissimilar. The arrangement of the different cuts is decidedly different from that of the appellant. They are not in parallelograms irregularly distributed. They are not in parallelograms at all. They are placed in regular columns from the top to the bottom of the sheet; the first being placed at the left and the second at the right

Digitized by Google

of the printed matter, and so on throughout the circular. The appellant wraps its circular around the bottle in the carton. That is not done by the appellees. They use their circular simply as an advertisement, sending it to the jobbers. It is nothing that the buyer at retail receives in purchasing the package. There is little or no danger that the jobber or retailer purchasing goods in large quantities would be deceived by a false brand. He not only knows the article he wishes to purchase, but is careful to ascertain if the article shown him be the genuine. It is the casual inattentive purchaser of a single package who is subject to be deceived, and such a one could not possibly be deceived by this circular, for he does not receive it, if in any respect the circular may be said to be deceptive. If any just criticism may be indulged with respect to the copying of the three cuts of the appellant's circular, the act can have no misleading effect, or induce one to mistakenly receive the one product for the other, and ought not, therefore, to avail, standing alone, to sustain the charge of unfair competition. Potter Drug & Chemical Corp. v. Pasfield Soap Company (C. C.) 102 Fed. 490.

A single word with respect to the carton will suffice. A carton of the same shape and construction has been used by the appellees for 15 years. Such cartons were well known and quite common at the time the appellant adopted them. The lettering and coloring of the two cartons used respectively by the appellant and appellees were as different and distinct as the printed labels upon the bottles.

(d) Has the product "Big Four" become known as "Four in One," and has it been sold as the product "Three in One"?

If the appellees had sanctioned the use of that designation for their product, and it had become so known, or if without their sanction their product had come to be so designated, we might be inclined to say that the use of the numerals should cease, that confusion might not result. But has it in fact so become known? We have given to the evidence on this point a careful scrutiny to ascertain if there be any just foundation for the charge. The evidence of the appellant upon this branch of the case rests upon the testimony of a single witness, a young man of 21 years of age, in the service of one dealing in hardware specialties, who sold the product of the appellant, but not that of the appellees. About two hours before giving his testimony, he was ordered to, and did, meet Mr. George W. Cole, president of the appellant, upon a street corner in the city of Chicago, and was directed by him to go to certain places and ask for "Four in One" oil, and, if they offered anything else, not to take it. He states that he went to Rothschild's and asked for a bottle of "Four in One" oil, and was given a bottle wrapped in a package, which he did not examine; that it was given to him by a female clerk; that it was wrapped up by her; and that, if he had examined it, he could not have told what it was. That he went to the Excelsior Supply Company and asked for a half a dozen large and half a dozen small bottles of "Four in One," and was given the goods with a bill for them which distinctly stated it was "Big Four" oil. He also stated that he had heard a female clerk at The Fair talk about "Four in One" oil about a month before his examination; that in June there were six women selling goods in that department, but at

Digitized by Google

the time of his examination there were only two, the force being decreased in number because of the discontinuance of a lamp demonstration that was being had there in June. The witness went with Mr. Robie, one of the appellees, to the department of The Fair where such goods were sold, and where he had heard the expression "Four in One." On his return he testified that the woman whom he had heard speak of "Four in One" oil was not there. At this point he was asked if, on the occasion of his visit to The Fair in company with Mr. Robie, he inquired if they had "Four in One" oil, and he said reluctantly—desiring first to have the advice of counsel for appellant whether he should answer—that he had so done at the request of Mr. Robie, and the saleswoman replied "No." With respect to the package he obtained at Rothschild's—the red package, as it is called—it is very different from the packages of the appellees here complained of. With respect to the transaction of this witness at the Excelsior Supply Company, two clerks of that company, testifying the day after the transaction, stated that the witness for the appellant called and asked for "Four in One" oil, and they told him they had no such thing, but had "Big Four," if that was what he wanted, to which he replied, "That is all right," and the witness wrapped up the bundle, and he paid for it, received the bill, and walked away. We deem this evidence on the part of the appellant wholly insufficient to base thereon a finding of unfair trade, or to prove that the product of the appellees has come to be generally known as "Four in One." It is remarkable, if it was a fact that the product had come to be generally so known, that no dealer in it and no purchaser of it could be found to so testify, and that we should be asked to base a finding of unfair trade in that respect upon the above-recited testimony of the young man who was employed for the occasion. We think the appellant has wholly failed to make out a case showing even a probability of confusion of goods by reason of the particular designation of the two labels. There is not an atom of evidence that any person has ever been deceived. There is, as we have stated in considering the first branch of this case, upon the face of these labels no probability that any one exercising the care that even an inattentive purchaser gives to his purchases would be deceived. This court has been at all times zealous in respect of the use of trademarks and labels, to restrain competitors from all unfairness in competition producing confusion of goods; but we are not disposed to carry the principles of the law so far that one trader may have a monopoly of all numerals, or be enabled to throttle the trade of all competitors.

Some evidence has been given by the appellant—quite inconclusive, as we think—indicating an intention on the part of the appellees in getting up this label "Big Four," and in prosecuting the business of the sale of that product, to enter into competition with them by selling it at a less price to the jobber, inducing them to substitute their product for that of the appellant, with the expectation of larger gains, and of imitating as closely as they safely could the appellant's labels and packages. We do not deem it necessary to consider this evidence, for, as we think, if the appellees ever designed to obtain an unfair advantage of the appellant, they have, as stated in Kann v. Diamond Steel Company, 32 C. C. A. 324, 89 Fed. 706, "never used any means calculated

Digitized by Google

to accomplish it, and they adopted those admirably suited to defeat it. Their intention therefore becomes immaterial." An intention to injure, if no injury be done, constitutes no ground for relief. Hopkins on Unfair Trade, § 76; Centaur Company v. Marshall, 38 C. C. A. 413, 97 Fed. 785; Postum Cereal Company, Ltd., v. American Health Food Company, 56 C. C. A. 360, 119 Fed. 848, 852.

We cannot better conclude this opinion than to use the language of Mr. Justice Brewer in Lorillard Co. v. Peper, 30 C. C. A. 496, 86 Fed. 956, 960:

"The difference is such that the eye will take it in at a moment's glance. Summing it all up, while there are certain minor points of resemblance which have been forcibly urged upon our attention by the counsel for plaintiff, yet, looking at the two packages with their labels—taking the tout ensemble—it appears to us clear that they are so essentially different that no one of ordinary intelligence, desiring to buy the one kind of tobacco, would be misled into buying the package of the other."

The case of Coats v. Merrick Thread Company, 149 U. S. 562, 13 Sup. Ct. 966, 37 L. Ed. 847, is also instructive upon this question.

The decree will be affirmed.

(130 Fed. 711.)

LEVY v. HARRIS.

(Circuit Court of Appeals, Third Circuit. June 8, 1904.)

No. 42.

1. PATENTS—INFRINGEMENT—CLAIMS FOR COMBINATION.
   In a claim of a patent for a combination, all the elements which the patentee has specified must be regarded as material, and infringement cannot be found in a device in which one of such elements is omitted, unless an equivalent part is employed.

2. SAME—OMISSION OF PARTS—QUILL-GRINDING MACHINE.
   The Levy patent, No. 664,564, for a machine for grinding quills of feathers, claim 1, includes as an element of the combination a spring, the ends of which bear on the suspended journal bearings of the presser-roll, and also "means for adjusting the tension of the said spring." *Held*, that such claim is not infringed by a machine which employs an equivalent spring, although of different form, but has no means for adjusting the tension of such spring.

Appeal from the Circuit Court of the United States for the Eastern District of Pennsylvania.

For opinion below, see 124 Fed. 69.

Horace Pettit, for appellant.

Walter C. Pusey and Joshua Pusey, for appellee.

Before ACHESON, DALLAS, and GRAY, Circuit Judges.

GRAY, Circuit Judge. This is an appeal from the decree of the court below, in a suit in equity brought by the appellant, who was the complainant below, against appellee, defendant below, for infringement of letters patent No. 664,564, issued December 25, 1900,

Digitized by Google

to the appellant, for an improvement in a machine for grinding quills of feathers. The specifications of the patent state the object of the invention, and the details of the construction, so far as we are here concerned with the same, as follows:

"My invention relates to certain improvements in machines for grinding the quills of feathers; and the principal object of the same is to provide a machine which is simple in construction and which will rapidly grind the ribs of the quill of the feathers and remove all pith from the same, leaving only the bone portion of stems with the web or vanes running from each edge, thus rendering the said quill of the feathers soft and pliable and capable of withstanding considerable bending without the liability of breaking.

The invention consists in the construction and arrangement of the various parts, such as will be hereinafter fully set forth, and particularly pointed out in the claims made hereto.

In the accompanying drawings, Fig. 1 is a front view of a machine constructed in accordance with my invention. Fig. 2 is a side elevation of the

S. LEVY.
MACHINE FOR GRINDING QUILLS OF FEATHERS.

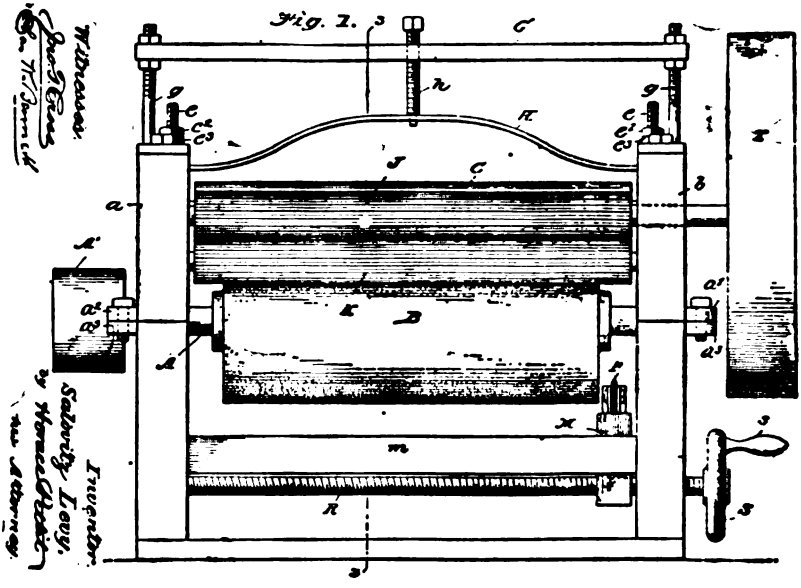

same. Fig. 3 is a central sectional elevation taken about on the line 3, 3, of Fig. 1, and Fig. 4 is a detail sectional view illustrating the yielding bearing of the presser-roll.

In carrying out my invention I provide a supporting-frame comprising the two side walls, a, b, connected at their lower ends to the base-plate, c. Each of the side walls, a, b, is made in two sections and hinged together at a', b', at their rear edges and having provided on their sides, near the forward edges, the projecting lugs, a^2, a^3, which are bolted together in the manner illustrated in Figs. 1 and 2.

Located about centrally in the side walls of the frame are bearings for the reception of the main driving-shaft, A, upon which is mounted the grinding-

Digitized by Google

roll, B, which is centrally located between the two frames. On the projecting end of driving-shaft, A, I provide a driving-pulley, A′, which is connected by a suitable belt with the power-shaft.

Directly above the grinding-roll, B, is mounted a pressing-roll, C, which is of much smaller diameter than the roller, B, and is mounted in the adjustable journal-boxes, d, which are suspended in recesses, d′, formed in the side walls of the frame. These boxes, d, are supported in a suspended position and adjusted by means of the threaded bolt, e, which enters a threaded aperture in the upper end of each box and passes through an opening, e′, formed in the top plate, f, of the frame. The lock-nuts, e^2, e^3, are provided above the plate, f, for supporting and adjusting the bolt, e. In each of the side frames of the machine I provide the vertical bolts, g, which support on their upper ends a crossbar, G, the said bolts, g, carrying jam-nuts for supporting and locking the crossbar. In the center of the said crossbar I provide a threaded opening adapted for the reception of the screw, h, which is provided with a shouldered lower end which fits into an aperture provided in the spring, H. The spring, H, is bowed, as illustrated, and bears at each end upon the journal-boxes, d, of the presser-roll, C, for the purpose of keeping the said presser-roll in constant contact with the grinding roll, or, in other words, for the purpose of

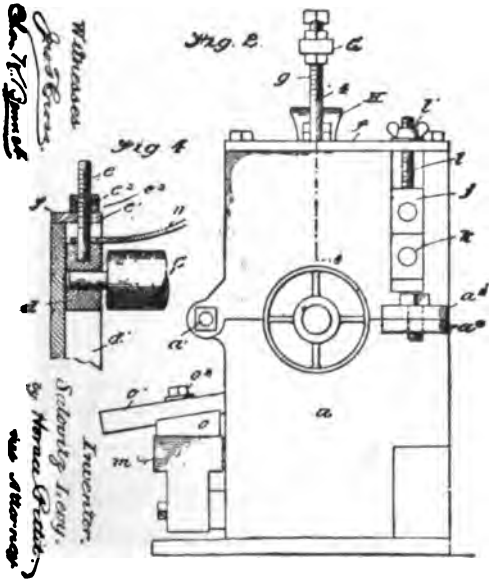

keeping the quill during the operation of the machine in close contact with the grinding-roll, while at the same time allowing the said presser-roll to yield upwardly. Each end of the spring, H, is provided with an elongated opening through which the bolts, e, pass. The tension of the spring, H, may be increased or diminished by adjusting the screw, h, carried by the bar, G. * * *

In the operation of my machine the feathers are guided by the operator between the feed-rolls, J, K, which are driven rather slowly by means of the driving-pulley, T, carried by the shaft of the upper roller, J. This operation crimps or crushes the thick quill of the feather as it passes between the corrugated rolls and feeds the said quill between the grinding-roll, B, and the yieldingly-mounted presser-roll, C, the said presser-roll tending to keep the

Digitized by Google

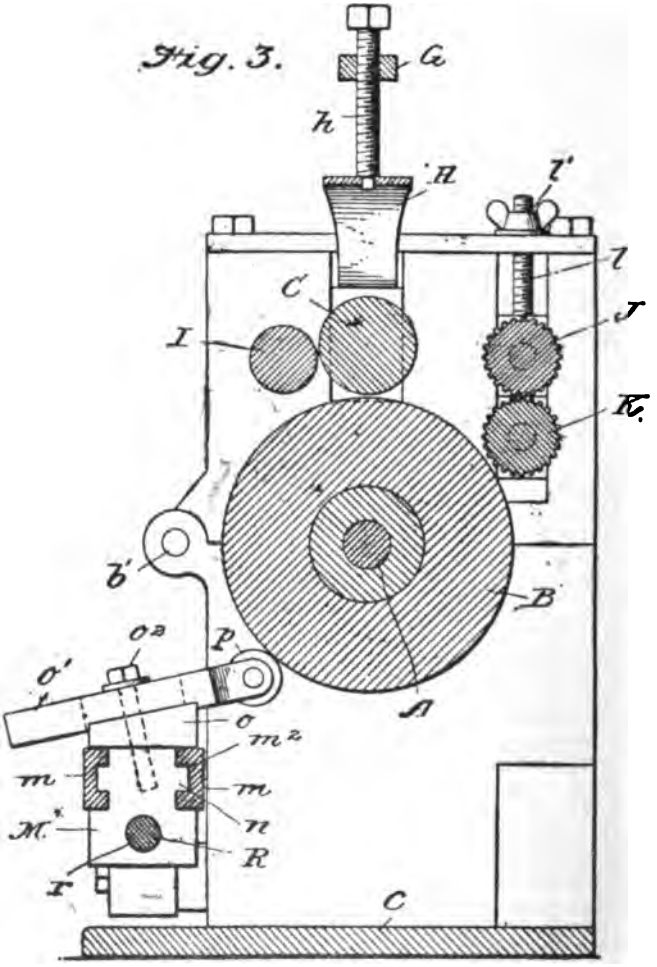

quill in close contact with the grinding-roll, which revolves very rapidly and grinds off the underside of the quill, removing everything, including the pith, with the exception of the bone which carries the web or vane of the feather."

Two claims are set forth in the patent, with the first of which only we have to do. It is as follows:

"(1) In a quill-grinding machine, the combination with the supporting frame, of a grinding-roll journaled in said frame, a presser-roll, C, bearings for said presser-roll suspended in the machine-frame so as to be capable of moving upwardly, means for adjusting said suspended bearings so as to regulate the distance between the presser-roll and the grinding-roll, a spring, H, adapted to bear at each end on the suspended journal-bearings, means for adjusting the tension of the said spring, and a pair of feeding and crushing rolls arranged in front of the grinding and presser rolls located so as to hold the quills while the grinding-roll is operating to remove the pithy material from the bone of the quill, substantially as described."

Digitized by Google

The validity of the patent in suit is not here in question. It was sustained by the learned judge of the court below, who, upon the first hearing, held that defendant's machine infringed the first claim of the patent. Upon a rehearing, however, the court was of opinion that defendant's machine did not infringe the patent in suit, for the reason that it did not have means for adjusting the tension of the spring referred to in claim 1, above quoted. The court below, in its opinion delivered after the rehearing, says:

"The patent claims as one of the elements in the combination, 'means for adjusting the tension of the said spring.' The specification shows that the particular means described by the inventor was the screw, h: 'The tension of the spring, H, may be increased or diminished by adjusting the screw, h, carried by the bar, G.' Neither this screw nor any equivalent device is to be found in the defendant's machine, but the tension of the springs is adjusted therein by the same means that is used for regulating the distance between the two rollers, namely, by the bolts, e. The defendants have therefore omitted entirely one element of the plaintiff's combination, and accordingly cannot be held to infringe. I think this position is sound, and is supported by the following authorities: Water Meter Co. v. Desper, 101 U. S. 332 [25 L. Ed. 1024]; Wright v. Yuengling, 155 U. S. 47 [15 Sup. Ct. 1, 39 L. Ed. 64]; Pittsburg Meter Co. v. Supply Co. (C. C. A., 3d Circuit) 109 Fed. 644 [48 C. C. A. 580]. As was said in the last-cited case: 'Nothing in the law of patents is better settled than the rule that a claim for a combination is not infringed, if any one of the described or specified elements is omitted without the substitution of any equivalent thereof.'"

We agree with what the learned judge has here said, and think that the complainant below is bound by the limitations imposed by his own language, as used in the first claim of the patent in suit. As said by Mr. Justice Bradley, in delivering the opinion of the Supreme Court, in Water Meter Co. v. Desper, supra:

"It may be observed, before concluding this opinion, that the courts of this country cannot always indulge the same latitude which is exercised by English judges in determining what parts of a machine are or are not material. Our law requires the patentee to specify particularly what he claims to be new, and if he claims a combination of certain elements or parts, we cannot declare that any one of these elements is immaterial. The patentee makes them all material by the restricted form of his claim. We can only decide whether any part omitted by an alleged infringer is supplied by some other device or instrumentality which is its equivalent."

A careful consideration of the device of the patent in suit, convinces us that the element described in the combination of claim 1, to wit, "a spring, H, adapted to bear at each end on the suspended journal bearings; means for adjusting the tension of said spring," was not only made material by its inclusion in the claim and specifications, but is in fact, a material element of the combination constituting the invention claimed. An inspection of the drawings and models submitted to the court, makes it perfectly manifest that the plate spring, H, the ends of which press upon the journal bearings on either side of the presser-roll in connection with the means for adjusting its pressure, furnished by the screw, h, furnishes a not unimportant part of the machine described in the patent. It must be borne in mind that the journal bearings, holding the ends of the shaft of the presser-roll, may be moved up or down by means of the bolts,

Digitized by Google

e, and the nuts, e^2 and e^3, as described in the specifications. This vertical movement enables the operator to regulate the distance between the presser-roll and the grinding-roll, and this regulation may be necessary by reason of the varying size of the materials to pass between the rolls. When the presser-roll has been thus raised or lowered to the distance required from the grinding-roll, it is held down, but yieldingly, by the ends of the plate spring, H. It is apparent, that if this plate spring is fixedly placed, its pressure at the ends on the journal bearings, and hence on the presser-roll, will be increased or diminished as the presser-roll is raised or lowered. It is most important, then, that there should be means for preserving just the pressure required, whether the presser-roll is raised or lowered. This can be accomplished by the means of adjustment provided in the screw, h, passing through the top bar of the frame, with its lower end resting on the middle of the arch of the plate spring, H. Thus, if the material to be treated requires that the presser-roll should be raised to a greater distance from the grinding-roll, in order to pass readily between the two, the raising of the presser-roll against the ends of the spring, H, would increase the pressure. It might, however, be desirable that the actual pressure should remain the same as before the spring is raised, and the means of adjustment supplied by the screw, h, would enable the original pressure to be maintained.

We now come to the consideration of the machine of the defendant below, alleged to infringe the patent in suit. It is admitted that the only difference between the combinations constituting the two machines, is in respect to this plate spring, H, and means for adjusting the same. By referring to the drawings of the defendant's machine, here-

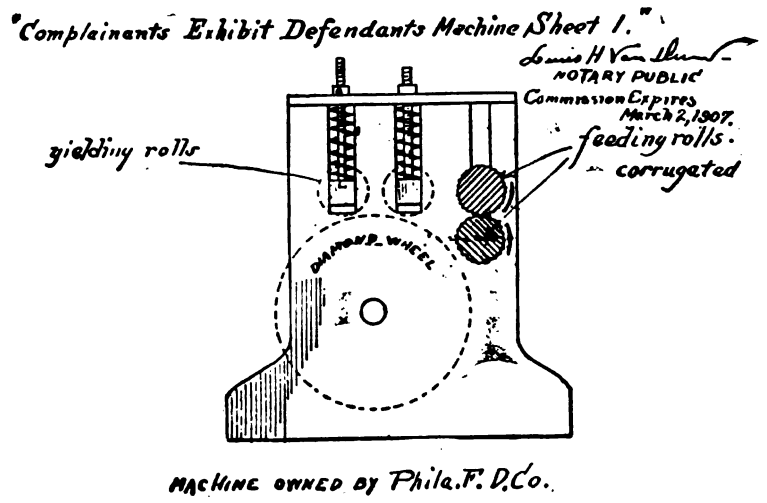

Digitized by Google

Complainants Exhibit. Defendants Machine Sheet 2."

Phila. Feather Duster Co.
Machine

Lewis H Van Duzen
NOTARY PUBLIC
Commission expires March 2, 1907

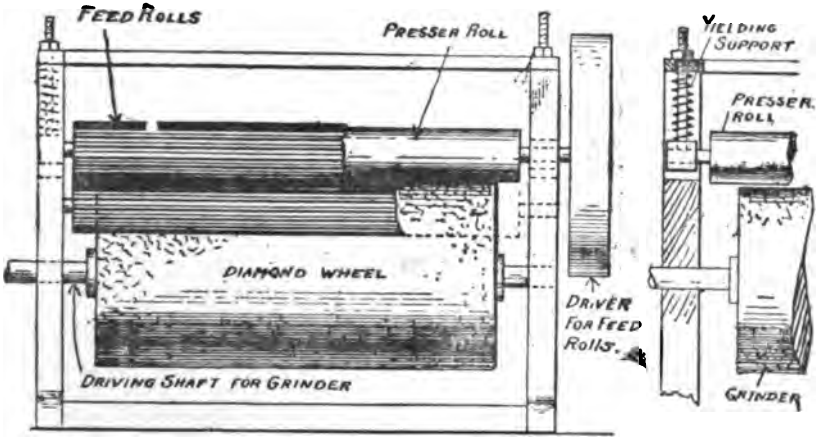

with reproduced, it will be seen that the journal bearings of the presser-roll may be raised or lowered in the sides of the frame by threaded bolts and nuts similar to the device for that purpose, in the patent in suit, and the distance between the presser-roll and the grinding-roll may be thus increased or diminished at will. As in the patent in suit, the journal bearings are *suspended* by the bolts referred to, but are free to be moved upwards. There is in each side of the defendant's machine, encircling the bolt, a coiled or helical spring, which furnishes a yielding pressure upon each end of the shaft of the presser-roll. It is apparent, that when the presser-roll is raised for any purpose, the compression of these coiled springs must increase the pressure upon the roll, and so conversely, when the presser-roll is lowered, so as to decrease the distance between it and the grinding-roll, the pressure of the helical spring is decreased. It follows that, in any given required position of the presser-roll, with reference to the grinding-roll, the pressure of these springs can neither be increased nor diminished. To increase the pressure, the presser-roll must be raised, thus abandoning the required position, and conversely, to decrease the pressure, the presser-roll must be lowered, which would again abandon the required position; or, if the two rolls were already so close together that no further approach could be made, no decrease in pressure could be obtained. It is thus seen that the defendant's machine lacks the means of adjusting the pressure of the spring, mentioned in claim 1 of the patent in suit, and particularly set forth by reference to letters H and h, both in the claim and specifications.

It is true, that the function of the two ends of the flat spring, in the machine of the patent in suit, is pressure upon the ends of the shaft of

Digitized by Google

the presser-roll, and it is also true, that when the presser-roll is raised, without more, this pressure is increased, and when it is lowered, it is decreased. But the essential element in this respect, of the patent in suit, i. e. means for adjusting the pressure, without either raising or lowering the presser-roll, distinguishes this combination from the defendant's device. The screw, h, passing through the transverse top bar of the frame, with its lower end on the top of the plate spring, can increase or diminish the pressure to any desired extent, no matter into what position the presser-roll is raised or lowered. In other words, in defendant's device, the raising or lowering of the presser-roll increases or diminishes the spring pressure, and there is no means for adjusting the pressure thus produced. If it be desirable to raise the presser-roll for any purpose, an increased pressure must be submitted to, for there is no means of restoring it by adjustment to its original energy. Then again, if the presser-roll in defendant's machine is at the distance required for the proper treatment of the feathers passing between them, and increased spring pressure should be desired, there is no way of obtaining it, except by raising the presser-roll, and thus destroying the desired relative distance of the two rolls from each other. On the other hand, in the machine of the patent in suit, when the presser-roll is at the desired distance from the grinding-roll, the pressure upon it may be increased or diminished without at all changing that distance.

The appellant contends that, inasmuch as the coiled springs of defendant's machine are compressed when the presser-roll is raised, and the tension of the springs thereby increased, and the opposite effect is produced when the roller is lowered, there is present in defendant's machine "a means for adjusting the tension of the springs," within the meaning of the claim. From what has been said, it seems to us clear, that this contention cannot be sustained. To support it would be doing violence to any accepted meaning of the word "adjusting." Adjustment of the tension is just as necessary after the raising or lowering of the presser-roll as before, and in defendant's machine, there is no means for such adjustment. It is not true, therefore, that in defendant's machine, a single element performs the functions of two elements specified in the first claim of complainant's patent.

We are of opinion, therefore, that this means of adjusting pressure, is a necessary element of the combination, as specified in the first claim of the patent in suit, and that the same, or any equivalent thereof, is not found in the alleged infringing machine of the defendant.

The decree of the court below is affirmed.

Digitized by Google

(130 Fed. 737.)

AMERICAN BONDING CO. OF BALTIMORE v. SPOKANE BUILDING & LOAN SOC.

(Circuit Court of Appeals, Ninth Circuit. May 2, 1904.)

No. 1,010.

1. FIDELITY INSURANCE — WARRANTIES—BREACH—CORPORATIONS—KNOWLEDGE OF OFFICERS.

Under 1 Ballinger's Ann. Codes & St. § 4255, providing that all corporate management shall be vested in a board of trustees, where an application for fidelity insurance by a building and loan association stated that the secretary insured derived his authority from the board of trustees, knowledge on the part of a single officer, trustee, or the president of the association that the secretary was indebted to it at the time the policy was issued could not be imputed to the corporation without proof that the officer's knowledge had been communicated to the board, so as to constitute a breach of a warranty in the policy that the secretary was not indebted to the association at the time of the issuance thereof.

2. SAME—FALSE STATEMENTS—KNOWLEDGE.

Where a fidelity bond securing a building and loan association against the embezzlement of its secretary provided that all the representations made by the employer to the surety were warranted by the employer to be true; that the employé had not, to the knowledge of the employer or its officers, been in arrears or a defaulter, and the association stated that its secretary was not at that time in debt to it; that he had property, funds, securities, and valuables on hand to balance his accounts—such statement did not constitute a warranty that the secretary was not indebted to the association at the time as a fact, but only that he was not so indebted, etc., to the knowledge of the association or its officers.

In Error to the Circuit Court of the United States for the Eastern Division of the District of Washington.

This is an action upon a policy of fidelity insurance issued by the American Bonding & Trust Company of Baltimore City to the defendant in error, the Spokane Building & Loan Society, a corporation of Spokane, Wash. The bond was in the sum of $3,000, dated January 17, 1902, and insured the defendant in error against loss through the embezzlement of its secretary, R. L. Bogardus, for a term of one year. After the execution of the policy, the plaintiff in error changed its corporate name to "American Bonding Company of Baltimore." Prior to the delivery of this bond, and before it became effective, the bonding company requested the building and loan society to answer in writing certain interrogatories concerning the risk about to be assumed under the bond. Accompanying these written questions, and as part of the same instrument, which was addressed to the Spokane Building & Loan Society, was the following statement: "An application has been made to this company to issue a bond of security for Mr. R. L. Bogardus as secretary in your service, at Spokane, to the amount of $3,000.00. This company desires to have written answers to the following questions, and these answers will be taken as the basis of the bond if issued." At the foot of this employer's statement was the following agreement: "It is agreed that the above answers are warranted to be true by the obligee, and are to be taken as conditions precedent, and as the basis of the said bond applied for, or any renewal or continuation of the same, that may be issued by The American Bonding & Trust Company of Baltimore City to the undersigned, upon the person above named. Dated at Spokane, Wash., this 13th day of January, 1902. Signature of the Employer Spokane Building & Loan Society. By S. S. Glidden, Prest. Official Capacity. [Seal of Spokane Building & Loan So-

¶ 1. Fidelity insurance, see note to American Credit Indemnity Co. v. Wood, 19 C. C. A. 273.

Digitized by Google

ciety.]" The building and loan society made written answer to the interrogatories, signed the agreement above set out, and returned the same to the bonding company, which thereupon executed its fidelity bond.

The employer's statement, besides others, contained the following questions and answers: "Q. 13. When were his accounts last examined? A. Being done now by a committee. Q. 14. Were they, at that time, in every respect correct, and proper funds, securities and values on hand to balance? A. Yes, last year. (Later: Now complete and found correct.) Q. 15. (a) Is there now, to your knowledge, any shortage due you by the applicant? A. (a) No. (b) Has he ever been short with you? (b) No. Q. 16. (a) Is he now in debt to you? A. (a) No. (b) If so, state amount and nature of indebtedness? (b) ———. Q. 17. Have you ever sustained loss through the dishonesty of any one holding the position of applicant? A. No."

Among other provisions, the bond contained the following stipulations: "(2) That all the representations made by the employer, his or its officers, to the surety, are warranted by the employer to be true; that the employee has not, to the knowledge of the employer, his or its officers, been in arrears or a defaulter in that position covered by this bond or in any other position: (3) That the surety's liability hereunder shall cease immediately as to subsequent acts of the employee from and after: (a) Discovery by the employer, his or its officers, of any default hereunder on the part of the employee."

During the term covered by this bond, R. L. Bogardus embezzled funds of the Spokane Building & Loan Society to the amount of $3,880. The acts of embezzlement all occurred between September 30 and October 17, 1902.

The bonding company defended the action brought upon this bond on two grounds: First. That the answers to the interrogatories were warranted by the building and loan society to be true, whereas, in fact, the answers to questions 13, 14, 15, 16, and 17 were false, in that, at the time these questions were answered, Bogardus was short in his accounts, his accounts were not correct in every respect, he did not have proper funds, securities, and values on hand to balance, and was in debt to the society. Second. That on the 19th day of September, 1902, the Spokane Building & Loan Society discovered a default under the bond, i. e., discovered that Bogardus was short in his accounts; that the terms of this bond released the bonding company from all acts of embezzlement occurring after the discovery of a default; and that the defalcations in question all occurred after September 19, 1902.

In making his opening statement of this second defense to the jury, counsel said: "Gentlemen of the Jury: I will prove, in addition to what I have already stated, and in addition to what has already been brought out in the evidence, that on the 19th day of September, 1902, President S. S. Glidden, one of the officers of the Spokane Building & Loan Society, discovered a default under this bond; that is, he discovered that Mr. Bogardus was short in his accounts. Then, under the provisions of the bond, which is already in evidence, which provides that we shall not be liable for a default occurring after the discovery of a default—under that bond we shall ask, upon the evidence that has been introduced, and some in addition to that, a verdict at your hands on the ground that on the 19th of September, 1902, the plaintiff discovered a default under this bond, and that the pleadings themselves show that the acts of embezzlement complained of, which they are seeking to hold us for, occurred after that date." Thereupon plaintiffs below moved the court to strike out this defense and rule out all evidence thereunder, for the reason that the facts therein stated did not constitute a defense. This motion the court granted on the ground that the default referred to by counsel in his statement was not known or discovered by the managing board of the plaintiff corporation, but simply by its president.

It is claimed by the plaintiff in error that the court erred in ruling out the second affirmative defense, and all evidence thereunder, upon counsel's opening statement thereof. It is further claimed that the court erred in giving instructions 2 and 3 to the jury, and in refusing to give instruction 4, asked by defendant. These instructions read as follows: "(2) This defense, as presented, is manifestly based upon the theory that this contract was made in two parts: That the statement made by the plaintiff to the defendant is one part of the contract, and the policy of insurance or guaranty issued by the

Digitized by Google

plaintiff to the defendant is the corresponding part; but that is not legally a correct theory of the case. The parties might have made a contract in that form, but that is not what they did do. All their preliminary negotiations and correspondence on the subject are merged in the policy that was issued, and this is a contract in one part; the liability of the defendant is to be determined by what is set forth in its policy or bond. Now, this policy refers to these answers to the interrogatories, and, so far as the bond itself contains a stipulation with respect to those parts, that stipulation is binding upon both sides, and the plaintiff is bound by that stipulation. (3) The material part of this contract with reference to this defense is contained in the second paragraph of the first one of the conditions annexed to the contract, and reads as follows: 'That all the representations made by the employer, his or its officers, to the surety, are warranted by the employer to be true.' Now, this is presented in the pleadings, and the defense has proceeded as if there were a period after the word 'true,' and that it was made an absolute condition that the answers should be taken as absolutely true, or else there was no contract; but the contract as it is set forth and admitted here is different. There is no period after the word 'true,' but a semicolon, and what follows thereafter is to be taken as a part of the same sentence, and as explanatory and as modifying the condition that the answers are to be true. Now, this is what is to be taken as true, 'That the employé has not, to the knowledge of the employer, his or its officers, been in arrears or a defaulter in that position covered by this bond or in any other position; that the employer, his or its officers, upon becoming aware of the employé gambling, speculating, or committing any disreputable, lewd, or unlawful act, will immediately notify the surety in writing.' By this language the warranty that the answers are true is qualified by the condition that they are, so far as the employer had any knowledge, to be taken as true, or warranted to be true. (4) By the terms of the bond here sued upon, and the employer's statement here in evidence, the Spokane Building & Loan Society warranted the truth of certain statements, and, among other things, the plaintiff warranted the truth of the statement that Romaine L. Bogardus had never been short to the society. Now, if you should find that Romaine L. Bogardus had in fact been short to the society, or, in other words, that the statement was not true, then your verdict must be for the defendant."

There are seven assignments of error which are claimed by the plaintiff in error to present two questions to be disposed of by the court: First. Did the fact that a default was discovered under the bond by the president of the Spokane Building & Loan Society on September 19, 1902, preclude said society from recovering for acts of embezzlement occurring after that time? Second. Was it a defense to the action on the bond to prove that Bogardus was short in his accounts, did not have proper funds, securities, and values on hand to balance, had been in arrears to the society, and was in debt to the society at the time the employer's statement was signed?

W. S. Gilbert, for plaintiff in error.

Mark F. Mendenhall and Ernest C. MacDonald, for defendant in error.

Before GILBERT and ROSS, Circuit Judges, and HAWLEY, District Judge.

HAWLEY, District Judge, after making the foregoing statement, delivered the opinion of the court.

The answer to the first question propounded by plaintiff in error depends upon whether or not the alleged knowledge of the president, under all the facts and circumstances of this case, can be imputed to the corporation defendant. The principles of law applicable to this question depend upon the particular facts of the given case, the character of the business of the corporation, the methods by which its business is conducted, the duties of its officers, etc. In the present case the

Digitized by Google

defaulting secretary is shown by the record to be the chief managing officer of the corporation. He collected the dues, had charge of the money, and was authorized to pay it out on account of the society by checks signed by the president and treasurer. The board of trustees was the controlling and governing body of the corporation. Among the questions asked and answers given in the employer's statement is the following:

"Q. 8. (a) Will he [Bogardus] be authorized to pay out of the cash in his custody any amount on your account? A. (a) Yes, by check of president and treasurer. (b) In what manner is such authority given? (b) By the trustees. * * * Q. 10. (a) How often and to whom will he remit or pay over the money received? A. (a) When ordered by the trustees."

The statutes of the state of Washington relative to private corporations prescribe that all corporate control and management shall be vested in and be exercised by a board of trustees. 1 Ballinger's Ann. Codes & St. Wash. § 4255. In the light of these undisputed facts, we are of opinion that the knowledge of a single officer or trustee or the president cannot be imputed to the corporation, unless it is affirmatively shown that his knowledge was brought home to the board of trustees.

The principles of law applicable to the facts of this case upon the point under discussion are so fully stated in Fidelity & Deposit Co. v. Courtney, 186 U. S. 342, 360, 22 Sup. Ct. 833, 46 L. Ed. 1193, that we quote at length therefrom:

"It is well settled that, in the absence of express agreement, the surety on a bond given to a corporation, conditioned for the faithful performance by an employé of his duties, is not relieved from liability for a loss within the condition of the bond by reason of the laches or neglect of the board of directors, not amounting to fraud or bad faith, and that the acts of ordinary agents or employés of the indemnified corporation, conniving at or co-operating with the wrongful act of the bonded employé, will not be imputed to the corporation. United States v. Kirkpatrick (1824) 9 Wheat. 720, 736 [6 L. Ed. 199]; Minor v. Mechanics' Bank (1828) 1 Pet. 46 [7 L. Ed. 47]; Taylor v. Bank of Kentucky (1829) 2 J. J. Marsh. (Ky.) 564; Amherst Bank v. Root (1841) 2 Metc. (Mass.) 522; Louisiana State Bank v. Ledoux (1848) 3 La. Ann. 674; Pittsburg, Fort Wayne & Chicago Ry. Co. v. Shaeffer (1868) 59 Pa. 350, 356; Atlas Bank v. Brownell (1869) 9 R. I. 168 [11 Am. Rep. 231]. The doctrine of these cases is thus epitomized in 59 Pa. 357:

"'Corporations can act only by officers and agents. They do not guaranty to the sureties of one officer the fidelity of the others. The rules and regulations which they may establish in regard to periodical returns and payments are for their own security, and not for the benefit of the sureties. The sureties, by executing the bond, became responsible for the fidelity of their principal. It is no collateral engagement into which they enter, dependent on some contingency or condition different from the engagement of their principal. They become joint obligors with him in the same bond, and with the same condition underwritten. The fact that there were other unfaithful officers and agents of the corporation, who knew and connived at his infidelity, ought not in reason, and does not in law or equity, relieve them from their responsibility for him. They undertake that he shall be honest, though all around him are rogues. Were the rule different, by a conspiracy between the officers of a bank or other moneyed institution, all their sureties might be discharged. It is impossible that a doctrine leading to such consequences can be sound. In a suit by a bank against a surety on the cashier's bond, a plea that the cashier's defalcation was known to and connived at by the officers of the bank was held to be no defense. Taylor v. Bank of Kentucky, 2 J. J. Marsh. 564.'

Digitized by Google

"So, also, in 3 La. Ann. 674, the court, after suggesting the distinction between the knowledge of the governing body of a bank, the board of directors, of the default of a bonded employé, and the knowledge of such default by another officer or employé, not communicated to the board, thus tersely stated the applicable doctrine (page 684): 'It cannot be said that if one servant of a bank neglects his duty, and by his carelessness permits another servant of the bank to commit a fraud, the surety of the fraudulent servant shall be thereby discharged.'

"And see American Surety Co. v. Pauly, 170 U. S. 156, 157 [18 Sup. Ct. 563, 42 L. Ed. 987], and cases cited. In other words, the principle of law discussed in the case of The Distilled Spirits, 11 Wall. 356 [20 L. Ed. 167], viz., that the knowledge of an agent is in law the knowledge of his principal, is intended for the protection of the other party (actually or constructively) to a transaction for and on account of the principal had with such agent. In the very nature of things, such a principle does not obtain in favor of a surety who has bonded one officer of a corporation, so as to relieve him from the obligations of his bond, by imputing to the corporation knowledge acquired by another employé, subsequent to the execution of the bond (and from negligence or wrongful motives, not disclosed to the corporation), of a wrong committed by the official whose faithful performance of duty was guarantied by the bond. As the rule of imputation to the principal of the knowledge of an agent does not apply to such a case, it must follow that it can only obtain as a consequence of an express provision of the contract of suretyship."

2. Was it a defense to the action on the bond to prove that Bogardus was short in his accounts, did not have proper funds, securities, and values on hand to balance, had been in arrears to the society, and was in debt to the society at the time the employer's statement was signed? The answer to this question depends upon the interpretation to be given to certain provisions in the bond, and to certain answers given in the employer's statement; the contention of the plaintiff in error being that the defendant thereby warranted that Bogardus had never been short in his accounts to the defendant; that he was not at that time in debt to the defendant; that he had proper funds, securities, and values on hand to balance his accounts. By referring to the statement of facts, it will be seen that the language of the employer's statement is, "Is there now, to your knowledge, any shortage due you by the applicant?" and that the language of the provisions of the bond is that the employé "has not, to the knowledge of the employer, his or its officers, been in arrears or a defaulter." In the light of the language contained in the statement of the employer, and in the condition of the bond, we are of opinion that instructions 2 and 3 as given by the court were correct, and that the fourth instruction was properly refused because of the error therein stated that "the plaintiff warranted the truth of the statement that Romaine L. Bogardus had never been short to the society." The instructions of the court in this case were in accord with the principles announced by the Court of Appeals in Supreme Council Catholic K. of A. v. Fidelity & Casualty Co., 63 Fed. 48, 59, 11 C. C. A. 96. The court in that case said:

"The defendant company offered to show that O'Brien was short on the 25th of April, 1891, about $40,000. It also offered to show that O'Brien was short in the funds of the order $61,000 at the time of the application for this bond. Upon objection the evidence was excluded. If this condition of O'Brien's affairs was unknown to the plaintiff order at the time this bond was applied for and accepted, such evidence would have been wholly immaterial. The only representation made by Mr. Coleman, and referred to in the contract as being the basis of contract, was in answer to question 13 of the statement de-

Digitized by Google

livered to the defendant company. That question was this: 'When were the accounts last examined, and were they in every respect correct?' To this question Mr. Coleman answered: 'May, 1891, and reported correct by examiners—three supreme trustees.' This evidence tended in no way to show that Mr. Coleman's answer was untrue. His representation was that three examiners had examined O'Brien's accounts, and reported his accounts correct. Now, if such an examination was made, and such a report was made to the council of the order, Mr. Coleman's representation was in no respect untrue. The particular offer covered by this exception embraces no offer to show that Mr. Coleman, or any other officer of the order, at the time this bond was applied for, knew that Mr. O'Brien was a defaulter."

But if it could be considered that the employer's statement and the provisions of the bond were fairly susceptible of two constructions, one favorable to the defendant in error and the other favorable to the plaintiff in error, the instructions of the court would still be correct, for, as is stated in American Surety Co. v. Pauly, 170 U. S. 133, 144, 18 Sup. Ct. 552, 42 L. Ed. 977:

"The former, if consistent with the objects for which the bond was given, must be adopted, and this for the reason that the instrument which the court is invited to interpret was drawn by the attorneys, officers, or agents of the surety company. This is a well-established rule in the law of insurance. National Bank v. Insurance Co., 95 U. S. 673 [24 L. Ed. 563]; Western Ins. Co. v. Cropper, 32 Pa. 351, 355 [75 Am. Dec. 56]; Reynolds v. Commerce Fire Ins. Co., 47 N. Y. 597, 604; Travellers' Ins. Co. v. McConkey, 127 U. S. 661, 666 [8 Sup. Ct. 1360, 32 L. Ed. 308]; Fowkes v. Manchester, etc., Life Ass'n, 3 Best & S., 917, 925. As said by Lord St. Leonards in Anderson v. Fitzgerald, 4 H. L. Cas. *484, *507: 'It [a life policy] is, of course, prepared by the company, and if, therefore, there should be any ambiguity in it, must be taken, according to law, most strongly against the person who prepared it.'"

There is no sound reason why this rule should not be applied in the present case. The object of the bond in suit was to indemnify or insure the defendant in error against loss arising from any act of fraud or dishonesty on the part of Romaine L. Bogardus in connection with his duties as secretary. That object should not be defeated by any narrow interpretation of its provisions, nor by adopting a construction favorable to the plaintiff in error if there be another construction equally admissible under the terms of the instrument executed for the protection of the defendant in error. As was said by the court below in refusing the motion for a new trial:

"If bonding corporations are to be sustained by the business interests of this country as being useful and worthy of support, they should be required to meet their obligations in all such cases as we have presented in this record."

The judgment of the Circuit Court is affirmed, with costs.

Digitized by Google

(130 Fed. 743.)

CONNER et al. v. MANCHESTER ASSUR. CO. OF MANCHESTER, ENGLAND.

(Circuit Court of Appeals, Ninth Circuit. May 23, 1904.)

No. 1,029.

1. INSURANCE—STIPULATIONS—WARRANTY.

A stipulation in a fire policy that the insurance company should not be liable for loss caused, directly or indirectly, by order of any civil authority, is not a warranty within Cal. Civ. Code, §§ 2607, 2608, providing that a statement in a policy of a matter relating to the thing insured or to the risk as a fact, and a statement which imports that it is intended to do or not to do a thing which materially affects the risk, is a warranty.

2. SAME—OPEN POLICY—PROVISIONS—ENFORCEMENT.

Where complainants accepted an insurance certificate insuring their crop against fires subject to all the terms and conditions of a certain open policy in defendant's possession made a part of the certificate, plaintiffs were bound by the provisions of such open policy though they had no knowledge thereof.

3. SAME—FIRES—POLICE REGULATIONS—DE FACTO AUTHORITY.

Where the supervisors of a county ordered fires to be started on certain pasture land for the purpose of destroying insects which were injurious to fruit crops, etc., under Cal. St. 1897, pp. 465, 466, c. 277, authorizing such supervisors to provide for the destruction of insects and to make sanitary regulations not in conflict with general laws, such supervisors had de facto authority to start the fire, which was sufficient to relieve an insurer of grain destroyed thereby, under a provision in the policy that insurer should not be liable for any loss occasioned by order of any civil authority, though the fire was started on other property, and the burning of plaintiff's grain was occasioned by the fire getting beyond control.

In Error to the Circuit Court of the United States for the Northern District of California.

On June 9, 1902, the defendant in error, in consideration of a premium paid it by the plaintiffs in error, executed and delivered to them a certificate of insurance, certifying that in consideration of the payment of said premium, it insured them against loss or damage by fire to the amount of $3,300 on their interest in a certain grain crop situated on certain described premises. The certificate proceeded to recite that it was understood and agreed that the insurance "is subject to all the terms and conditions embraced in open policy numbered 3,301,070, which is made a part hereof to the amount specified herein." Among the terms and conditions embraced in said open policy so referred to in the certificate were the following: "This company shall not be liable for loss caused directly or indirectly by invasion, insurrection, riot, civil war or commotion, or military or usurped power, or by order of any civil authority." The plaintiffs in error did not at any time see the said "open policy," nor did they know of the conditions thereof prior to the fire hereinafter referred to, and said policy always was in the exclusive possession of the defendant in error. In the month of June, 1902, lands in the county in which the land referred to in the certificate is situated were threatened with public disaster by a plague of grasshoppers, and on June 17, 1903, the board of supervisors of said county made an order referring to the threatened danger from said pest, and reciting that the only practical method of destroying the same and saving the orchards and vineyards in said county was by burning the grass upon certain pasture land, and ordering that the grass thereon be condemned and destroyed by fire. The order was carried out, and the fire was started at a point from three to four miles distant from the land upon which the grain of the plaintiffs in error was situated, but it got beyond control and reached the land of the plaintiffs in error, and burned

Digitized by Google

their grain insured as aforesaid, and no other fire contributed to the loss. On these facts the Circuit Court, on an action brought to recover on the policy, denied the right of the plaintiffs in error to recover.

Rosenbaum & Scheeline, for plaintiffs in error.
Goodfellow & Eells, for defendant in error.

Before GILBERT and ROSS, Circuit Judges, and HAWLEY, District Judge.

GILBERT, Circuit Judge, after stating the facts as above, delivered the opinion of the court.

It is contended on behalf of the plaintiffs in error that they are not bound by the terms and conditions expressed in the "open policy" referred to in the certificate of insurance, for the reason that they never assented thereto, and that said provisions were not contained in the instrument which they received from the insurance company. They rely upon the following sections of the Civil Code of California:

"Sec. 2605. Every express warranty, made at or before the execution of a policy, must be contained in the policy itself, or in another instrument signed by the insured, and referred to in the policy, as making a part of it."

"Sec. 2607. A statement in a policy, of a matter relating to the person or thing insured, or to the risk, as a fact, is an express warranty thereof.

"Sec. 2608. A statement in a policy, which imports that it is intended to do or not to do a thing which materially affects the risk, is a warranty that such act or omission shall take place."

It is contended that under these provisions of the Code the stipulation referred to in the so-called "open policy," that the insurance company should not be liable for loss caused directly or indirectly by order of any civil authority, is a warranty, and is therefore no part of the insurance contract, since it was not contained in the policy itself, nor in another instrument signed by the insured and referred to in the policy as making a part of it. We do not think the statute was intended to create any new definition of a warranty in insurance. In Bouvier's Law Dictionary it is said that a warranty in insurance is "a stipulation or agreement, on the part of the insured party, in the nature of a condition"; and in Phillips on Insurance, § 754, it is said:

"An express warranty is an agreement expressed in the policy, whereby the assured stipulates that certain facts are or shall be true, or certain acts shall be done relative to the risk. It may relate to an existing or past fact, or be promissory and relate to the future."

Section 2605 of the Civil Code of California was evidently intended to express in statutory form the rule that no express warranty made by the insured shall affect the contract of insurance, unless it be contained in the policy or in the application, or some other instrument signed by the insured and made a part of the contract, and is in effect an affirmance of the generally accepted doctrine applicable to such contracts. Section 2607 proceeds to define an express warranty in insurance, and declares it to be a statement of a matter relating to the person or thing insured, or to the risk, as a fact. Its language is entirely compatible with the ordinary definition of warranty as given in the authorities above cited. A stipulation in an insurance policy providing that the company shall not be liable for loss from certain specified causes is not

Digitized by Google

a warranty, as that term is generally used in fire insurance contracts, nor is it, under the terms of the statute, a statement of a fact relating to the person or thing insured, or to the risk. A warranty in such insurance contracts is a statement of fact made by the insured, on which the insurer relies, and on the strength of which he enters into the contract.

The plaintiffs in error cite Levi v. Allnutt, 15 East, 207, Levy v. Vaughn, 4 Taunton, 387, and Oom v. Taylor, 3 Camp. 207, in which it appears that in certain marine policies of insurance stipulations similar to that contained in open policy No. 3,301,070 were denominated "warranties." In the first two cases the policies contained the stipulation, "Warranted free from confiscation by the government in the ship's port or ports of discharge." In the third case the stipulation was, "Warranted free of capture and seizure in the port of discharge." But it will be observed that while these so-called "warranties" are in their substance exemptions of the insurance companies from liability from the specified causes, they are in form undertakings upon the part of the insured, and not upon the part of the insurer; and this fact undoubtedly accounts for the use of the term "warranted"—a use not in harmony with the generally accepted meaning of the word in modern policies of fire insurance.

The plaintiffs in error rely upon the decision of the Supreme Judicial Court of Massachusetts in Eastern Railroad Co. v. Relief Fire Ins. Co., 98 Mass. 420, but the statute of California, it is to be regretted, differs materially from that of Massachusetts. The latter adopts the salutary provision that in fire insurance "the conditions of the insurance shall be stated in the body of the policy, and neither the application of the insured, nor the by-laws of the company, shall be considered as a warranty or a part of the contract, except so far as they are incorporated in full into the policy and so appear on its face before the signatures of the officers of the company." The court in that case pointed out the beneficent features of the statute, and said that its purpose was to prevent just claims under policies of insurance against loss by fire from being defeated by the provisions of other documents which the courts had previously been obliged to hold to be binding on the assured, because in law a part of the contract of which he often had no actual knowledge or appreciation. The plaintiffs in error cite this expression of the court as applicable to their case, and advert to the fact that they paid for and accepted the certificate of insurance, which declared in general terms that they were insured against loss by fire, but which elsewhere referred to another instrument, presumably a blank form of policy, containing certain limitations of the risk assumed, which policy they never saw and the terms of which they never knew. To that contention the law makes this answer: The plaintiffs in error accepted an instrument which contained a reference to another instrument in which were embodied the limitations, and which were made a part of the contract. They were presumed to know the contents of the paper which they received, and if they had read it they would have observed that it referred to and adopted the provisions of the other instrument. They had the right to demand an inspection of that instrument, and, if inspection had been refused, to decline to enter into the contract.

It is contended, further, that the property was not directly or indi-

Digitized by Google

rectly destroyed by order of civil authority; that there was no law authorizing the supervisors of a county to destroy the property of the citizens thereof; and that the property of the plaintiffs in error was destroyed by accident or neglect, and without their fault. The record of the findings of the trial court shows that the fact was established that the fire was started under an order of the supervisors of the county. The Statutes of California of 1897, pp. 465, 466, c. 277, confer authority upon the supervisors of a county to provide for the destruction of insects injurious to fruit trees, vines, or plants, and to make and enforce local police, sanitary, and other regulations not in conflict with general laws. But whether or not there was lawful authority to start the fire which indirectly caused the damage in this case, there was de facto authority. The order was in fact made, and made by the officers to whom the said powers were given, and thereby the loss occurred. This, we think, excuses the insurance company. Barton v. Home Insurance Co., 42 Mo. 156, 97 Am. Dec. 329. The facts that the loss was the result of a fire started on other property, and that the property of the plaintiffs in error was not ordered to be burned, do not render the exemptions of the policy inapplicable. There was but one fire. It was ordered by civil authority. It indirectly caused the loss, and there was no intervening cause. Insurance Co. v. Boon, 95 U. S. 117, 24 L. Ed. 395; Grand Trunk R. R. Co. v. Richardson, 91 U. S. 454, 23 L. Ed. 356; Krippner v. Biebl, 28 Minn. 139, 9 N. W. 671.

The judgment of the Circuit Court is affirmed.

(132 Fed. 1006.)

INTERNATIONAL POSTAL SUPPLY CO. OF NEW YORK v. BRUCE et al.

(Circuit Court of Appeals, Second Circuit. August 8, 1904.)

No. 72.

PATENTS—INFRINGEMENT BY OFFICERS OF UNITED STATES—JURISDICTION TO GRANT RELIEF.

Complainant's bill alleged infringement of certain patents for improvements in machines designed for use in the post offices of the United States in canceling stamps and postmarking mail matter; that one of the defendants, who was a postmaster, was using in his office two infringing machines under leases from his codefendants; that such leases would expire in the near future, and that defendants were preparing to renew the same. It was also alleged that complainant had tendered to defendant postmaster, for use in his office on the same terms, two machines made under the patent, which had been refused. The bill prayed for the usual relief for infringement, and for an injunction against the renewal by defendants of the lease. The postmaster, who was the only defendant residing within the district, alone appeared, and filed a plea, alleging that he never personally used or caused to be used the alleged infringing machines, but that they were contracted for and placed in his office by the post office department, where they were used by his subordinates by order of such department, solely in the service and for the benefit of the United States; that the rental for such machines was paid by order of the department from government funds; and that he had no control over the leasing of the same, or the renewal of the leases therefor. *Held* that, while the court was of opinion, on principle, that it had jurisdiction, and that

Digitized by Google

complainant was entitled to the remedy invoked, the question of jurisdiction was so far in doubt, in view of the decision of the supreme court in Belknap v. Schild, 16 Sup. Ct. 443, 161 U. S. 10, 40 Fed. 599, that the plea should be sustained.

Appeal from the Circuit Court of the United States for the Northern District of New York.

Bill in equity for infringement of patent for marking and stamping apparatus for use in post offices. From a decree dismissing the bill, this appeal is taken.

The statement and opinion filed below, and here reprinted from 114 Fed. 509, are in full as follows:

The amended bill is in the ordinary form for the infringement of four letters patent for improvements in marking and stamping apparatus designed for use in the post offices of the United States, in canceling stamps and postmarking mail matter. The bill alleges that these post offices afford the sole and only market for the patented machines and that complainant is fully equipped and ready to supply all the machines needed to do the necessary work. The bill alleges further that two of the patents relied on have been sustained by the United States circuit court of appeals of the Second circuit and that as to the other two priority of invention was adjudged in favor of complainant's assignors after interference proceedings in the patent office. The bill alleges that the defendants are maintaining and operating daily, at Syracuse, N. Y., two stamp-canceling machines containing and embodying the improvements and inventions described and claimed in and by said several letters patents; and that the said defendant Dwight H. Bruce, acting as postmaster of the city of Syracuse, N. Y., is using, and permitting to be used, in the post office of said city of Syracuse, in the conduct of the business of said post office, the aforesaid two stamp-canceling and postmarking machines owned and maintained by the defendants Rice and the American Postal Machines Company, and is paying an annual rental of $110 per machine for the use of the aforesaid infringing stamp-canceling and postmarking machines to the defendants Rice and the American Postal Machines Company; that said defendants are acting conjointly and in concert in infringing said letters patents, and although notified of their aforesaid infringement and requested to desist and refrain therefrom they still continue the aforesaid infringement; that complainant has furnished to the defendant Dwight H. Bruce, a stamp-canceling machine made in accordance with the inventions and improvements described and claimed in said several letters patents; and in order that the facilities of the said Syracuse post office might not be impaired complainant has offered to and holds itself in readiness to supply additional stamp-canceling machines to take the place of the aforesaid infringing machines, and to do such other acts as may be necessary in the premises to save the public business of the Syracuse post office from inconvenience and enable the said defendant Dwight H. Bruce to conduct the affairs of the said post office without infringing complainant's patents in the conduct thereof, which said offer the said defendant Dwight H. Bruce has declined. The bill further states as follows: "That the said infringing machines used at the Syracuse post office are leased by the defendants Rice and the American Postal Machines Company, for the term of one year from June 30, 1901, for use in the Syracuse post office by the defendant Bruce as aforesaid, and that the lease or rental of said infringing machines will expire on June 30, 1902, and that the aforesaid defendants are jointly co-operating and making efforts to renew said lease or rental for another year from the 30th of June, 1902, and are endeavoring to and threatening to continue the use of the aforesaid infringing machines after the expiration of the said rental or lease on the 30th of June, 1902." The defendant Bruce, who is the only defendant residing in this district, and who alone appears, files an amended plea alleging "that he has never personally used or caused to be used any stamp-canceling and postmarking machines;

Digitized by Google

that he is the postmaster of the United States post office at Syracuse, N. Y., where certain stamp-canceling and postmarking machines are used by some of his subordinates who are employés of the United States government, such use being entirely in the service and for the benefit of the United States; that such postmarking and stamp-canceling machines as are in use in said Syracuse post office were contracted for by the United States government through the post office department and were placed in the Syracuse post office, and used there, by order of said post office department; that the post office department hired said machines for the term of one year from June 30, 1901, which term is as yet unexpired; and that the rental of these machines is paid by order of said post office department out of funds appropriated for that purpose by the congress of the United States; that the renewal of said lease or rental, or the making of a new lease for another year from the 1st of July, 1902, is a matter which is wholly in the hands of the post office department and over which said defendant Bruce has no control; and defendant avers that the question whether the use of the alleged infringing machines will be continued in the Syracuse post office after the 30th of June, 1902, is one which will be determined by the post office department in Washington." The defendant also contends that if the complainant is entitled to any remedy against him it is not by an action in equity but by a suit at law. The complainant has set the amended plea down for argument.

COXE, District Judge. The constitution says:

"The congress shall have power to promote the progress of science and useful arts, by securing for limited times to authors and inventors the exclusive right to their respective writings and discoveries." Article 1, § 8.

Under the power thus granted the congress has provided that any person who has invented "any new and useful art, machine, manufacture or composition of matter" and who complies with the law in other respects may "obtain a patent therefor."

Section 4884 of the Revised Statutes says:

"Every patent shall contain * * * a grant to the patentee, his heirs or assigns, for the term of seventeen years, of the exclusive right to make, use, and vend the invention or discovery throughout the United States, and the territories thereof."

The theory of the plea is that this statute should be interpreted as though it contained a proviso as follows:

"Provided, however, that all officers of the government of the United States and their agents, servants and employés shall, when acting in their official capacity, at all times have the free use of such invention."

Although the defendant does not go so far as to assert that the complainant has no remedy whatever when its patent is used by government officers, this is the practical effect of his contention. If the plea to the jurisdiction be sustained all equitable remedies are denied to the patentee, his right to an injunction is gone and he is relegated to the court of claims to prosecute an inadequate remedy upon a questionable theory before a tribunal having doubtful jurisdiction. Prior to the decision in Belknap v. Schild, 161 U. S. 10, 16 Sup. Ct. 443, 40 L. Ed. 599, in February, 1896, the question presented by the plea, though often mooted, had never been decided adversely to the jurisdiction of the United States courts. The circuit courts had with great unanimity sustained their right to entertain these cases and the supreme court, though expressing doubt upon the subject, in at least two reported cases (James v. Campbell, 104 U. S. 356, 26 L. Ed. 786; Hollister v. Manufacturing Co., 113 U. S. 59, 5 Sup. Ct. 717, 28 L. Ed.

Digitized by Google

901), had nevertheless assumed jurisdiction and dismissed the bills upon the merits. Mr. Walker summarizes the law as follows:

"Patent rights are exclusive, not only of citizens and residents of the United States, but also of the government itself, and of its agents. The government has no more right than any private citizen, to make, use, or sell a patented invention, without the license of the patentee. When the government grants letters patent for an invention, it confers upon the patentee an exclusive property therein, which cannot be appropriated or used by the government itself, without just compensation, any more than land which has been patented to a private purchaser can, without compensation, be appropriated or used by the government." Walk. Pat. § 157; 3 Rob. Pat. § 897; James v. Campbell, 104 U. S. 356, 26 L. Ed. 786; U. S. v. Burns, 12 Wall. 246, 20 L. Ed. 388; Hollister v. Manufacturing Co., 113 U. S. 59, 5 Sup. Ct. 717, 28 L. Ed. 901; Solomons v. U. S., 137 U. S. 348, 11 Sup. Ct. 88, 34 L. Ed. 667; Head v. Porter (C. C.) 48 Fed. 481.

In the latter case Judge Colt, after carefully considering all of the leading authorities, concludes as follows:

"It is at least doubtful whether the present action could be brought in the court of claims. In its present form it is an action in tort, and not upon any contract, express or implied, and, as was said by Mr. Justice Bradley in James v. Campbell, the jurisdiction of that court does not extend to torts. While the supreme court have declined to pass upon the question of jurisdiction in these cases, they have assumed jurisdiction and disposed of each case on its merits; in other words, no case can be found where the court has dismissed the suit for want of jurisdiction, and this would seem to be sufficient ground, in this case, to overrule the plea, and allow the case to be heard upon bill, answer, and proofs. If, however, the principle established in the cases we have reviewed, and the rule laid down by Mr. Justice Miller in Cunningham v. Railroad Co.,[1] are sound, it is difficult to see why the court has not jurisdiction in the present case. This is an action of tort for the infringement of a patent, brought against an individual, who is an officer or agent of the United States, and whose defense is that he acted under orders of the government. That this is no defense in actions of this general character has, as we have seen, been repeatedly held by the supreme court and the objections interposed that these suits are substantially against the government, and that, therefore, it is a necessary party to enable the court to grant relief, has been many times urged without avail. The rights secured to a patentee under his grant from the government are a form of property, in the enjoyment of which he is entitled to protection against all trespassers, including the government. To deprive him of the full enjoyment of these rights by using his invention without his consent is to deprive him of his property without just compensation or due process of law, and therefore in conflict with those provisions of the constitution which secure this protection to the citizen. I am of opinion, therefore, that the plea in this case should be overruled."

It is thought that this is a fair exegesis of the law at the time the opinion was filed, in December, 1891. This court is in accord with the views thus expressed.

It has always seemed to the court illogical, to use no harsher term, for the government to give to an inventor an exclusive right to his invention and thereupon proceed to render nugatory its own grant. The grantor of the right should, of all parties, be the last one to invade it. For the government to permit its own agents for its own benefit to violate its own covenant savors of bad faith. To use the language of Mr. Justice Harlan, in the dissenting opinion in Belknap v. Schild, if such evasion be permitted "the government may well be regarded as organized robbery so far as the rights of patentees are concerned." Of what avail is it that the patentee is informed that although his ex-

[1] 3 Sup. Ct. 292, 609, 27 L. Ed. 992.

Digitized by Google

clusive right can be trampled on with impunity he may yet resort to the court of claims for partial relief and failing there he may apply to congress? The right to use the invention is his and he should not be required to relinquish that right, in invitum, except in cases of public peril or necessity. Not only does good faith require that the government should respect its own patents, but good policy also demands it. To hold otherwise strikes at the foundation upon which our patent laws rest. It discourages that class of inventors who are devoting their energies to the improvements of appliances used in the great departments of the government and upon which the progress and safety of the nation may depend in the future, as it has depended on more than one notable occasion in the past. Is it prudent to expect that the men of genius who have brought our engines of attack and defense to such a high state of perfection on sea and land will continue to work for a government which appropriates at will the fruits of their genius and labor? If the doctrine which forms the basis of this plea be once firmly established a patentee will be practically, though not theoretically, remediless against the encroachments of the officers of the government. What fundamental principle of law requires that the circuit courts should be ousted of a jurisdiction which they have so long maintained? Is it not safe to intrust to the judges of the United States courts the interests of the government, in all confidence that the writ of injunction will not be abused or issued in any case where the public interests are at all involved or are likely to suffer? A patentee has rights which are exclusive of the United States. The United States has no more right than an individual to use, without license, a patented invention. This proposition is no longer open to dispute and yet it is asserted that it is a right without a remedy and must so continue until congress provides a remedy. Conceding that the jurisdiction of the circuit court is not free from doubt should not every effort be made to sustain it until congress provides a tribunal which can grant adequate relief? That the court of claims is not such a tribunal is manifest. In any view its jurisdiction is limited to a recovery upon the theory of an implied contract and even this shred of remedy seems never to have been confirmed by the supreme court. It is true that the court of claims has taken cognizance of several cases which the supreme court has disposed of on the merits. Hubbell v. U. S., 179 U. S. 77, 21 Sup. Ct. 24, 45 L. Ed. 95; Solomons v. U. S., 137 U. S. 342, 11 Sup. Ct. 88, 34 L. Ed. 667. In only one instance was the jurisdiction under discussion and there it was upheld because the patentee had given his consent to the use of the invention and it was held that the claim was not one for infringement but a claim of compensation for an authorized use. U. S. v. Palmer, 128 U. S. 262, 9 Sup. Ct. 104, 32 L. Ed. 442. Mr. Justice Bradley, speaking for the court, says:

"It is objected that an action cannot be brought in the court of claims on a patent, the circuit court having exclusive jurisdiction of this subject. But whilst that objection may be available as to actions for infringement of a patent, in which its validity may be put in issue, and in which the peculiar defenses authorized by the patent laws in Rev. St. § 4920, may be set up, it is not valid as against actions founded on contracts for the use of patented inventions."

Digitized by Google

Upon principle and authority, therefore, the court would have little hesitation in overruling the plea were it not for the decision of the supreme court in Belknap and Schild. This decision is relied on by the defendant as a definitive determination of the questions in issue. The patent in that case was granted to Schild for an improvement in caisson gates. The caisson gate alleged to infringe was constructed by the United States and was in its possession and control at the dry dock in the navy yard at Mare Island. This dry dock was used for naval purposes and the public defense in the building and repairing of ships for the navy of the United States. A plea was interposed alleging these facts and stating further "that the defendants, and each of them, never had anything to do with the construction, use or operation of the gate, or made any claim of right, title, possession, control or use of it other than as officers and agents of the United States, and in obedience to orders of the naval department of the government." The circuit court overruled this plea and the ruling was sustained, the supreme court using the following language:

"The fact so pleaded and suggested could not, consistently with the previous decisions, above cited, prevent the defendants from being held liable to the patentee for their own infringement of the patent. There was no error, therefore, in overruling the plea of the defendants and the suggestion of the attorney general."

As the plea set up the official character of the defendants it is urged that this ruling makes it incumbent upon this court to overrule the plea at bar, but in view of the opinion expressed in the latter part of the decision it is thought that the paragraph above quoted must have reference to some averments of the bill or plea not fully disclosed by the record. The court proceeds to point out that the caisson gate, though made in infringement of the patent, was nevertheless the property of the United States. Both the title and the possession vested in the United States. The opinion says:

"The entire interest adverse to the plaintiff was the interest of the United States in property of which the United States had both the title and the possession; the United States were the only real party, against whom alone in fact the relief was asked, and against whom the decree would effectively operate; the plaintiff sought to control the defendants in their official capacity, and in the exercise of their official functions, as representatives and agents of the United States, and thereby to defeat the use by the United States of property owned and used by the United States for the common defense and general welfare; and therefore the United States were an indispensable party to enable the court, according to the rules which govern its procedure, to grant the relief sought; and the suit could not be maintained without violating the principles affirmed in the long series of decisions of this court, above cited."

It was also decided that there could be no decree for profits awarded against the defendants and that whatever profits accrued inured to the benefit of the United States.

"The necessary result is," says the opinion, "that even if the validity of the patent and its infringement by the defendants are assumed, the plaintiff, upon this record, is not entitled to an injunction, to profits or to damages."

The points of difference upon the facts between that case and the case in hand are First: The machines at use in the Syracuse post

Digitized by Google

office are not owned by the United States but are leased by the post office department for the term of one year. Second: The complainant is prepared to substitute other machines for the two infringing machines on similar terms so that the substitution can be effected without loss to the government or inconvenience to the public. Third: The quia timet feature of the present bill. Since the decision in Belknap and Schild the supreme court entertained jurisdiction of an equity suit for the infringement of a patent and affirmed a decree of the circuit court of appeals of the Fourth circuit dismissing the bill. Dashiell v. Grosvenor, 162 U. S. 425, 16 Sup. Ct. 805, 40 L. Ed. 1025. The action was in the ordinary form for the infringement of a patent for improvements in breach-loading cannon which were being made at the Washington navy yard. The circuit court, after a careful examination of the testimony, upheld the patent and directed an injunction to issue. Grosvenor v. Dashiell (C. C.) 62 Fed. 584. The circuit court of appeals reversed this judgment, holding that the circuit court was without jurisdiction and that the owners of the patent "can recover just compensation for such use and infringement from the government by a suit in the court of claims, or by means of an appropriation for that purpose made by congress, on application made to that body." Although it appeared that the manufacture of the cannon complained of was by the authority and direction of the defendant and under a contract with him by which he was to receive $125 for each cannon, the court of appeals decided that the suit was in substance and effect against the government and could not be maintained. The court also decided that complainant could not succeed for another reason to which it is unnecessary to refer. Dashiell v. Grosvenor, 13 C. C. A. 593, 66 Fed. 334, 27 L. R. A. 67. The supreme court does not discuss either of the propositions upon which the court of appeals bases its judgment, but affirms the decree dismissing the bill upon a ground not alluded to by the court of appeals, namely, that the patent was not infringed. The last sentence of the opinion is as follows:

> "This conclusion also renders it unnecessary for us to consider the questions discussed by the court of appeals in its opinion, in respect to one of which see Belknap v. Schild, 161 U. S. 10, 16 Sup. Ct. 443, 40 L. Ed. 590; but for reasons stated, its decree dismissing the bill, is affirmed."

As infringement was specifically found by the circuit court and as this finding was not criticised in the court of appeals it may be argued with some plausibility that the supreme court would not have deemed it necessary to examine and decide the difficult question of infringement if satisfied with the reasoning of the court of appeals upon the jurisdictional question. The Belknap Case had just been decided, the subject was fresh in the minds of the justices, and there is some force in the suggestion that they would not have gone so far afield to find another reason for sustaining the judgment if clearly convinced that the reason assigned by the court of appeals was a valid one. In other words, may it not, perhaps, be inferred that the supreme court intends to confine the ruling in the Belknap Case to situations precisely similar to the one there shown, where the decree reversed contemplated the destruction of property of the

Digitized by Google

government and the serious interference with the work of the navy of the United States? Some additional light is thrown on the discussion by the decision in November, 1898, of the circuit court of appeals of the Sixth circuit in Howell v. Miller, 33 C. C. A. 407, 91 Fed. 129. This was a copyright case, and especial interest attaches to the decision from the fact that the opinion was written by Mr. Justice Harlan who dissented in Belknap v. Schild. After commenting at some length upon the law as there enunciated the learned justice says:

"It thus appears that the supreme court, in Belknap v. Schild, proceeded in its judgment upon the ground that the caisson gate used at the navy yard of the United States under the supervision of the officers of the government, had become its property, and that such use could not be enjoined because an injunction could not operate directly upon the government's use of its own property, when it was not a party to the suit and could not, without its consent be sued. * * * It may be observed that if, before the caisson gate in question had been constructed, the patentee had applied for the relief necessary to prevent such construction, a different case would be presented to the supreme court."

The court has been unable to discover any decision since Howell and Miller which contributes anything of importance to the discussion. The situation is a most perplexing one. What to do!

After the most careful consideration it is thought that the wisest disposition of the controversy is to sustain the plea. The reasons which induce to this conclusion may be briefly stated as follows: First: It cannot be pretended that the question of jurisdiction is so far free from doubt as to warrant the court in granting a preliminary injunction. This being so it is probable that the question raised by the plea can be determined on appeal before the record would be ready for final hearing were the plea overruled. If the decree dismissing the bill be affirmed the parties will be saved the expense and annoyance incident to taking the proofs and printing the testimony. Second: The question is an important one and the controversy regarding it should certainly be set at rest. If it be presented on a bill and plea it must be decided and no better case can be selected in which to raise the naked question of jurisdiction. Should it be finally determined that the circuit courts can no longer entertain cases where government agents, acting under instructions from the executive departments, use devices covered by patents, a strong appeal may be made to congress to grant some adequate relief to this large class of inventors. Third: If the complainant could obtain relief upon the quia timet clauses of the bill the court would be inclined to retain jurisdiction, but as no one appears but the defendant Bruce and he, upon the admitted facts, has nothing whatever to do with the making or renewal of contracts it is not easy to see how an injunction against him will prevent the makers and owners of the machines from entering into renewal agreements with the post office department. The defendant Bruce is not a party to these agreements and has no interest in or control over them. In other words, the parties against whom such an injunction should be aimed are not parties to the action. Fourth: Although the facts differ in the particulars above stated from the facts in the Belknap Case

Digitized by Google

the court cannot resist the conclusion that the attempt to distinguish the two cases is not grounded upon substantial considerations. The court cannot ignore the fact that the supreme court has said that the owner of a patent cannot enjoin officers of the government from using the invention in their official capacity; neither can he recover profits when the only profits shown are made by the United States. The plea states specifically that the defendant is using the invention in his official capacity and that no profits have accrued to him individually. These facts are all admitted. Fifth: This suit is not the complainant's only remedy; it may yet obtain relief, at least so far as future infringements are concerned, by bringing an action against the other defendants in the proper district. The question of jurisdiction here discussed could not be raised in such an action. The bill is dismissed.

Louis Marshall, for appellant.

Before WALLACE and LACOMBE, Circuit Judges.

PER CURIAM. Decree of Circuit Court affirmed.

(130 Fed. 514.)

WALTER BAKER & CO., Limited, v. SLACK.

(Circuit Court of Appeals, Seventh Circuit. April 12, 1904.)

No. 955.

1. UNFAIR COMPETITION — DECEPTION OF CUSTOMERS BY RETAIL DEALER — BAKER'S COCOA.

Complainant, Walter Baker & Co., Limited, and its predecessors in business, have since 1780 been engaged in the manufacture of cocoa and chocolate, which have become well known in the trade under the general name of "Baker's Cocoa" and "Baker's Chocolate." In 1897 one W. H. Baker, who had then recently commenced the manufacture of similar products, which were sold in unfair competition with complainant's, was enjoined from using the word "Baker" in connection with his products, except when accompanied with the statement in prominent letters, "W. H. Baker is distinct from the old chocolate manufactory of Walter Baker & Company," and such requirement has since been observed. Defendant, a retail grocer, advertised to sell "Baker's" cocoa and chocolate, and when customers called for either by that name they were given the W. H. Baker product. After suit brought, by his direction such customers were told: "We have two Bakers. Which do you want, W. H. or Walter Baker?" He testified that 9 out of 10 would not know the difference, and would ask for the best, in which case they were given the W. H. Baker product. *Held*, that there was a clear design to deceive customers, the profit being greater on the product sold, and that complainant was entitled to an injunction restraining defendant from advertising any product but complainant's under the name of "Baker," or furnishing it in response to requests for "Baker's" goods, or in any manner using such name in connection with other goods without clearly designating by whom such goods were made.

¶ 1. Unfair competition, see notes to Scheuer v. Muller, 20 C. C. A. 165; Lare v. Harper & Bros., 30 C. C. A. 376.

Digitized by Google

2. SAME—DAMAGES.

Where a defendant has deliberately engaged in unfair trade, complainant is entitled to recover damages and profits from the time the violation of his rights commenced.

3. SAME—PROFITS—EXPENSES OF SALE.

In determining the profits made by a defendant from the sale of an article in a suit for unfair competition, the expenses of making the sales must be deducted from the gross profits.

Appeal from the Circuit Court of the United States for the Northern District of Illinois.

One Dr. James Baker, in the year 1780, established at Dorchester, Mass., a manufactory for chocolate and other products of cocoa. He was succeeded in business by his son, and later by his grandson, Walter Baker. In the year 1836 the latter adopted the name of Walter Baker & Co., and under that name the business was continued by him and his successors until 1895, when they organized a corporation under the laws of the commonwealth of Massachusetts under the name of Walter Baker & Co., Limited, and took over the business. This company was in turn succeeded in March, 1898, by another of the same name, created under a special act of the Legislature of that commonwealth, which latter company, the appellant here, acquired the business, property, and rights of its predecessor, and continued the business, its present factory being situated upon the same site in Dorchester on which the business was founded by Dr. Baker in 1780. The cocoa manufactured by the appellant is put up in half-pound tin cans about 4½ inches high and about 3¼ by 2¼ inches in breadth. Around the tin is a label printed in blue, yellow, and brown. On one side is the picture of a girl carrying a tray, and styled "La Belle Chocolatiere." The conspicuous words on the label are "Walter Baker & Company. Ltd.," printed in blue, and "Breakfast Cocoa," the word "Breakfast" being in yellow and "Cocoa" in white, blue, and brown. On one side the conspicuous words are "Baker's Breakfast Cocoa," the first and last words being in blue and the word "Breakfast" in brown. The chocolate manufactured by appellant is made in half-pound cakes, about six inches in length, three inches in width, and three-quarters of an inch in thickness, with beveled edges, done up in a blue wrapper, with a yellow label pasted upon it on which are the words "Baker's Chocolate," with a description of the goods, and directions for using, in fine print. Upon the reverse side is pasted a picture of the girl above described. These articles have been so made and labeled and placed upon the market for from 30 to 60 years, and are known to the trade as "Baker's Cocoa" or "Baker's Breakfast Cocoa" and "Baker's Chocolate." The name "Baker" has thus become associated in the minds of dealers and consumers, and the public generally, with the product of the appellant's factory, and its products are universally known and bought and sold as "Baker's Cocoa" and "Baker's Chocolate" respectively. During all this time the appellant and its predecessors have extensively advertised their products, and they have become widely known. Until 1898 they were the only manufacturers of cocoa and chocolate by the name "Baker." In the year 1894 one William Henry Baker, of Winchester, Va., began to put upon the market chocolate, powdered cocoa, and other products of the cocoa bean, so put up and labeled as to cause his goods to be called, sold, and accepted as Baker's, and as the goods of the appellant and its predecessors. Thereupon the appellant filed its bill in the United States Circuit Court for the Western District of Virginia against Baker, and also filed a bill against his agent, Sanders, in the United States Circuit Court for the Southern District of New York, to enjoin the palming off of William Henry Baker's goods as the goods of the appellant, and the use of the name "Baker" in connection therewith. In the first suit, in September, 1896, the court by its interlocutory decree enjoined the defendant from imitating the labels, boxes, wrappers, letterheads, or advertisements of the complainant therein, from using the words "& Company" or the word "Company" in connection with the name "W. H. Baker," but declined to enjoin the defendant therein from using the name "W. H. Baker" in connection with the manufacture. Subsequently, on the 20th of July, 1897, the court modified its

Digitized by Google

decree, so that it enjoined the defendant from using the name "Baker" alone. but required the insertion of the full name "W. H. Baker," and also required to be placed upon each package, in type as prominent as the title, the words, "W. H. Baker is distinct from the old chocolate manufactory of Walter Baker & Company." Walter Baker & Company, Ltd., v. Baker (C. C.) 77 Fed. 181. In the suit in the Southern District of New York a like injunction was granted, and enlarged by the United States Circuit Court of Appeals. Walter Baker & Co. v. Sanders, 80 Fed. 889, 26 C. C. A. 220. The effect of these decisions is to require a differentiation of the packages of the two manufacturers, and to require William Henry Baker to place in prominent type on the face of the packages the announcement that "W. H. Baker is distinct from the old chocolate manufacturer, Walter Baker & Company." Thereafter William Henry Baker, so far as the record discloses, complied with these decrees, continuing the business and using the labels and names as sanctioned by the decrees. His chocolate is put up in half-pound cakes, wrapped in blue, and bearing a lighter blue label, and his cocoa in half-pound and one-fifth pound tins, all displaying prominently the name "W. H. Baker," with the announcement required by the decrees and above stated.

The appellee, Slack, is a retail grocer in Chicago. For a long time he had handled and dealt extensively in the products of the appellant, selling them, and them only, in response to requests for "Baker's Chocolate" and "Baker's Cocoa," and advertising them by those names. In December, 1898, he commenced to deal in the products of William Henry Baker, purchasing chocolate and cocoa in packages labeled as authorized and required by the courts in the suits above stated. Early in the year 1900 he began advertising William Henry Baker's products in the Chicago papers as "Baker's Premium Best Cooking Chocolate" and "Baker's Best Cocoa," and this continued up to the time of the institution of this suit. After July 1, 1900, the appellee advertised "W. H. Baker's Premium Chocolate," but the advertisement contained no information discriminating between the two kinds. There is evidence to show that his customers asking for "Baker's Cocoa" or "Baker's Chocolate" were supplied with articles of William Henry Baker's manufacture, the profit on which was a few cents a pound more than on the sale of the product of the appellant; but in case Walter Baker's chocolate or cocoa was asked for, customers received that; and that after this suit his salesmen were instructed to say that the chocolate of W. H. Baker was not made by Walter Baker & Co., and that, when "Baker's Chocolate" and "Baker's Cocoa" was asked for, the salesmen would ask what brand, saying, "We have two Bakers. Which do you want, W. H. or Walter Baker?" But 9 out of 10 would not know the difference, saying, "Which is best? Give me the best." And the salesmen would then give them W. H. Baker's.

This bill was filed July 23, 1900, to enjoin the alleged unfair trade. The prayer of the bill as amended was for a decree as follows: "That a writ of injunction, temporary until hearing and perpetual thereafter, may issue out of and under the seal of this court against the said Charles H. Slack, restraining him, his agents and employés, from advertising, selling, or causing to be sold any cocoa or chocolate other than that made by your orator as or under the names 'Baker's Cocoa' or 'Baker's Chocolate,' or in response to requests for 'Baker's Cocoa' or 'Baker's Chocolate;' and also from using the word 'Baker,' 'Bakers,' or 'Baker's' alone on packages, boxes, labels, show cards, or in advertisements, or orally, or in any manner in connection with powdered cocoa or chocolate other than that made by your orator; and from using as aforesaid the word 'Baker,' 'Bakers,' or 'Baker's' (whether the same be or be not coupled with other names or initials) in such a collocation with the words 'cocoa' or 'chocolate' (whether the same be or be not coupled with some further descriptive word or words) as to indicate that such cocoa or chocolate is a variety of 'Baker's Cocoa' or 'Baker's Chocolate,' but the defendant may indicate thereon in appropriate language by or for whom the cocoa or chocolate in question is made or prepared; and nothing herein shall prohibit defendant from selling the cocoa and chocolate of William Henry Baker, of Winchester, Va., wrapped and labeled in the manner prescribed by the United States Circuit Court for the Western District of Virginia in the suit referred to in the bill of complaint."

Digitized by Google

On April 3, 1901, the court entered an interlocutory decree enjoining the defendant as follows: "That the defendant, Charles H. Slack, his agents, servants, and employés, be, and they hereby are, perpetually enjoined from selling, or causing to be sold, any cocoa or chocolate other than that made by Walter Baker & Co., Limited, in response to requests for 'Baker's Cocoa' or 'Baker's Chocolate,' unless prior to such sale the purchaser is actually notified that the cocoa or chocolate about to be furnished is not manufactured by the old chocolate manufactory of Walter Baker & Co., and that a writ of injunction issue to that effect;" but refused to enter any decree with respect to the advertising by the defendant. The complainant below excepted to the action of the court in refusing to award a perpetual injunction in accordance with the prayer of the amended bill. The matter was referred by the decree to a master to ascertain the profits which the defendant had made since May 1, 1900, and, to the action of the court in limiting the accounting to a period since that date, the complainant below also excepted. The master reported the gross profits to be $128.48, and deducted therefrom the average cost of operating the general business of the defendant, 24.27 per cent. of the gross sales, being $113.11, leaving as a net profit to the defendant on the sale of the infringing goods $15.37. Upon that report the final decree was entered on the 13th day of June, 1902, enjoining the defendant as in the interlocutory decree stated, overruling the exceptions to the master's report, confirming the same, and awarding judgment for $15.33 profits and for the costs of the action, from which decree, upon due assignment of errors, this appeal is taken.

Frank F. Reed and W. L. Putnam, for appellant.

A. B. Melville, for appellee.

Before JENKINS, GROSSCUP, and BAKER, Circuit Judges.

JENKINS, Circuit Judge, after stating the facts as above, delivered the opinion of the court.

The appellee sold the product of William Henry Baker in the exact form of package and style of label sanctioned by the decrees of the courts referred to in the statement of facts. He had purchased from William Henry Baker the product in the form and style which those courts had authorized Baker to make and sell. To that extent the appellee, we are disposed to hold, was justified. It must not, however, be overlooked that the word "Baker," as applied to chocolate and cocoa manufactured by the appellant, had in the course of years come to represent to purchasers the product of Walter Baker & Co., and was so generally known to the trade. The appellee had largely dealt in those products, and was well informed of those facts, prior to the time when he undertook the sale of the product of William Henry Baker's manufacture. It must also not be overlooked that William Henry Baker instituted his business and applied the name of "Baker" to his products fraudulently, with the expectation of profiting by the trade-name of "Baker," and in the hope of diverting to himself some part of the trade which legitimately belonged to Walter Baker & Co., Limited. We must therefore deal with the conduct of the appellee in the marketing of this product of William Henry Baker in the light of these circumstances. He had the right, as we assume, to sell that product, but honesty and good faith required that he should not palm it off as the product of Walter Baker & Co.; that he should not represent it as "Baker's Chocolate" or "Baker's Cocoa," for that meant to the purchaser that it was the product of Walter Baker & Co., Limited. We need not be diligent to assemble the many instances

Digitized by Google

which the record discloses of wrongful imposition upon purchasers of the one product for the other, since the appellee himself furnishes the key to his conduct. It is satisfactorily shown that for a long time prior to this suit purchasers inquiring for "Baker's Chocolate" would be supplied with W. H. Baker's product, and this because "we made a little more on that." Upon the commencement or threatening of the present suit, he instructed his salesmen to say to purchasers demanding "Baker's Cocoa" or "Baker's Chocolate," "We have two Bakers. Which do you want, W. H. or Walter Baker?" He also said that 9 out of 10 purchasers would not know the difference, saying, "Which is best? Give me the best." And the salesman would then furnish the W. H. Baker product. Without enlarging upon this conduct, we think it evidences a deliberate design and intention to deceive. The purchaser was entitled to that which he demanded, to that which had been approved to his taste by experience, or which he had been recommended to purchase. In the market there were no "two Bakers'" products. There was but one, and that was the product of Walter Baker & Co., Limited. The courts had enjoined William Henry Baker from using the word "Baker" alone, and had required to be prominently placed upon each package the statement that "W. H. Baker is distinct from the old chocolate manufactory of Walter Baker & Company." No such statement or representation was by the appellee directed to be made to the inquirer for "Baker's Chocolate" or "Baker's Cocoa." Instead, there is manifested a clear design to mislead and confuse the proposing purchaser with the statement that there were two "Baker" products in the market. The courts sanctioned the use by William Henry Baker of his name "Baker" upon the packages, with the explanation stated, to avoid, as far as possible, confusion of goods; but they did not sanction the use of the name "Baker" in connection with the term "chocolate" or "cocoa." We have no difficulty, therefore, in finding that the appellee, with full knowledge of the situation, sought to palm off the spurious goods as the genuine. The court below was evidently of that opinion, but by its decree enjoined the appellee from selling "any cocoa or chocolate other than that made by Walter Baker & Co., Limited, in response to requests for 'Baker's Cocoa' or 'Baker's Chocolate,' unless prior to such sale the purchaser is actually notified that the cocoa or chocolate about to be furnished is not manufactured by the old chocolate manufacturer, Walter Baker & Co." This, as we conceive, gave the appellee leave to sell the spurious article as "Baker's Cocoa" or "Baker's Chocolate," if it was accompanied by the statement that it was not manufactured by the old chocolate manufacturer, Walter Baker & Co. We may safely take it for granted that not one in a thousand knowing of or desiring to purchase "Baker's Cocoa" or "Baker's Chocolate" know of Walter Baker & Co., Limited. The name "Baker" is identified with the product, and known, in connection with the product of the appellant, as a badge and guaranty of excellence. To sanction the sale of the spurious article as "Baker's Chocolate" or "Baker's Cocoa," even if accompanied with the statement that it was manufactured

Digitized by Google

by William Henry Baker and not by the old manufacturer, Walter Baker & Co., Limited, would not inform the purchaser that it was a different article, or other than the article known to the trade and to the world as "Baker's Chocolate" and "Baker's Cocoa," and the identity of the name is the more subtle in the deception. The purchaser was entitled to that for which he had asked. We do not mean to say that it is not within the province of the seller to represent to the proposing purchaser that another article which he has is superior in excellence to that which is called for, and to induce him by proper argument or statement to purchase that other, but he must not represent such other to be the product which the purchaser had called for. In this respect we think the decree below failed to give adequate relief, and that the prayer in the amended bill in this respect correctly states the relief to which the appellant is entitled, and safeguards the right of the appellee to sell William Henry Baker's products in a proper manner.

Prior to this suit the appellee advertised the product of William Henry Baker as "Baker's Chocolate" and "Baker's Cocoa." This was done because the name "W. H. Baker" was a new name, and the advertisement in the original name would draw the custom of persons acquainted with the product of the appellant. This was seeking to use the reputation and the good will of the appellant in the sale of the spurious product, and was an efficient means to that end. This was as much a fraud as an actual oral representation to a proposing purchaser, and should have been enjoined. Singer v. Wilson, L. R. App. Cases, 389; Jay v. Adler, 6 R. P. C., 136, 139; Mitchell v. Williams, 106 Fed. 168, 45 C. C. A. 265.

The remaining questions arise upon the directions of the decree with respect to an accounting, and the report of the master thereon, confirmed by the court.

First. The court adjudged that the complainant should recover of the defendant profits which the defendant had made, and the damages which the complainant had suffered, through the defendant's violation of complainant's right, as decreed, since May 1, 1900. The complainant below excepted to so much of that decree as limited the accounting of profits and damages by that date. This date was an arbitrary date, and no reason is suggested in the record for its selection. The evidence discloses that from December, 1898, there had been repeated infringements of the complainant's right, and, necessarily, resulting damage. The complainant was entitled to full compensation for the injury sustained. We perceive no reason why it should be debarred of recovery for the time prior to May 1, 1900. In that respect the decree was faulty.

Second. The proofs adduced to the master had reference only to the profits accruing to the defendant from the illegal sale. The question of the true measure of damages in cases of this sort is an interesting one. The injured party is entitled to full compensation for the injury, but how shall that be measured? Manifestly, the profits which the infringer has made would not in all cases be compensation to the injured. The latter's loss in part inheres in the failure to acquire a just and deserved gain; also in the injury to

Digitized by Google

the reputation of his product by reason of the substitution of the spurious article. The latter element is difficult, if not impossible, of accurate admeasurement. It can only be approximately compensated by an allowance in the nature of punitory damages, resting largely in discretion. But as to the actual loss, is it not more reasonable to say that the loss sustained is the profit which the injured party would have made if the genuine goods had been supplied, and not the profit which the party inflicting the injury actually made by the unlawful sale? That is to say, ought not the injured party to recover the difference between the cost to him of the manufacture of his article and the price at which he is able to dispose of it in the market, together with such sum as the court in its discretion should think the genuine article had lost in its reputation by substitution of the spurious article? Should not regard be had to complainant's loss, rather than to defendant's profits? Hall v. Stern (C. C.) 20 Fed. 788. It has been supposed that the measure of damages in these cases is analogous to the measure of damages allowed for infringement of a patent, but Judge Sawyer suggests that the analogy will not hold. Benkert v. Feder (C. C.) 34 Fed. 534. We are, however, spared the necessity of resolving this interesting question, since the complainant below failed to take any exception to the decree in this regard, and contented himself before the master with proving the profits which the infringer had made; and the only question presented for decision is whether the master, whose report was confirmed by the court below, was right in deducting from the gross profits made by the defendant by the sale of the spurious goods a proportionate percentage for the expense of operating the general business of the defendant. In The Tremolo Patent, 23 Wall. 518, 23 L. Ed. 97, decided in 1874, the court held, with respect to an infringement of the patent right, that, in the ascertainment of profits made from sales of an organ with a patented attachment, it was proper to prove the general expenses of the business in effecting sales of organs generally, and to deduct a ratable proportion from the profits made from the patented attachment. In Société Anonyme v. Western Distilling Co. (decided in 1891 [C. C.]) 46 Fed. 921, Judge Thayer, delivering an oral opinion, stated that the expenses of business to be allowed must be expenses necessarily incurred in the unlawful venture, which would not have been incurred but for engaging in such venture. He says that "when an unlawful business is carried on in connection with the defendant's regular business, and the same agencies are employed in doing that which is lawful and that which is unlawful, no rule of law of which I am aware requires any deduction for expenses in estimating the profits of the unlawful business." He makes no reference to the decision in the Tremolo Patent, although in that case there was, as in the case before Judge Thayer, a like invasion of a right. See, also, N. K. Fairbank Co. v. Windsor (C. C.) 118 Fed. 96. Considering that the action for damages for the invasion of such right sounds in tort and not in contract, there is much force in Judge Thayer's reasoning. It does not seem quite just that the wrongdoer snould be permitted to escape without pecuniary loss to himself, and yet

Digitized by Google

we must remember that here the appellant has chosen to prove, as the basis of recovery, merely the profits which the wrongdoer has made, and in estimating those profits we feel concluded by the ruling of the ultimate tribunal, that, to ascertain the net profits accruing to the wrongdoer, as in ascertaining profits in any other case, the expense of making the sale should be deducted from the gross proceeds of the sale, upon the same principle that the cost of the spurious article is deducted from the gross receipts of its sale.

The failure to receive adequate compensation for the injury done in such case proceeds from the act of the party in seeking recovery for the profits made by the wrongdoer, rather than the loss sustained by the injured party.

The decree will be reversed, and the case remanded with a direction to the court below to render an interlocutory decree pursuant to the prayer of the amended bill, and to ascertain, according to law, the loss, injury, and damage sustained by the complainant, and to decree accordingly.

(130 Fed. 521.)

THE WILDCROFT.

(Circuit Court of Appeals, Third Circuit. May 23, 1904.)

No. 21.

1. SHIPPING—DAMAGE TO CARGO—EVIDENCE AS TO CAUSE.

A ship may sustain the burden of proof resting on her to show that cargo damage was due to a cause for which she is not liable by circumstantial evidence as to the manner in which the water causing the damage entered the hold, and in the absence of direct evidence the court is justified in adopting her theory in that respect, where the facts and circumstances shown are consistent with such theory and not consistent with any other.

2. SAME—EXEMPTION UNDER HARTER ACT—PRESUMPTION OF SEAWORTHINESS.

The casting of the burden of proof on one party or the other in a given case does not destroy the presumptions in favor of a party which exist under the general law of evidence. So a shipowner, claiming exemption from liability for cargo damage under section 3 of the Harter act (Act Feb. 13, 1893, c. 105, 27 Stat. 445 [U. S. Comp. St. 1901, p. 2946]), has the burden of proving the seaworthiness of the vessel; but, in the absence of evidence to the contrary, such burden is met prima facie by the presumption that he performed his duty in making her seaworthy at the commencement of the voyage.

3. SAME—FAULT IN MANAGEMENT OF VESSEL.

Where a ship was at the commencement of a voyage in all respects seaworthy, and properly manned, equipped, and supplied, damage to a sugar cargo from fresh water which escaped into the hold where the sugar was stowed while the cargo was being discharged, by reason of a valve having been improperly left open while water from the river was being pumped into the engine tank, was due to a fault in the management of the vessel, for which she is exempted from liability by section 3 of the Harter act (Act Feb. 13, 1893, c. 105, 27 Stat. 445 [U. S. Comp. St. 1901, p. 2946]).

Appeal from the District Court of the United States for the Eastern District of Pennsylvania.

See 124 Fed. 631, 126 Fed. 229.

¶ 2. Statutory exemption of shipowners from liability, see note to Nord-Deutscher Lloyd v. Insurance Co. of North America, 49 C. C. A. 11.

Digitized by Google

H. L. Cheyney, for appellant.
J. Parker Kirlin, for appellee.

Before ACHESON, DALLAS, and GRAY, Circuit Judges.

GRAY, Circuit Judge. This is an appeal from a final decree in admiralty, by the District Court of the United States for the Eastern District of Pennsylvania, dismissing the libel of the appellant.

The suit was brought by appellant, to recover damages alleged to have been sustained with respect to a shipment of sugar on the steamship "Wildcroft," from Cuba to Philadelphia. The libelant was consignee of the sugar. The libel recites that the cargo of sugar was delivered to the steamship in good order and condition, to be carried to the port of Philadelphia, and there delivered in the same good order and condition, and that upon the arrival of the steamship at Philadelphia, a large portion of said cargo was greatly damaged by contact with water. The libel charges that said damage was due to the unseaworthiness of said vessel at the commencement of said voyage.

The defense here relied upon is, that the goods were carried forward under bills of lading that contained this clause: "All accident, loss and damage whatsoever from machinery, boilers and steam navigation, or from perils of the seas and rivers, or from any act, neglect or default whatsoever of the pilot, master or mariners, being excepted;" that the vessel was in every way seaworthy at the commencement of the voyage, and that the damage to the cargo was caused by perils of the sea and navigation, within the exceptions in the bills of lading. The alternative defense is urged, that if the damage was caused or contributed to by any faults of those in charge of the vessel, the vessel was protected from responsibility therefor, by the terms of the act of Congress, approved February 13, 1893, called the "Harter Act." Act Feb. 13, 1893, c. 105, § 1, 27 Stat. 445 [U. S. Comp. St. 1901, p. 2946].

We take the following statement of the case from the opinion of the learned judge of the court below:

In April, 1901, the Wildcroft, having discharged a cargo of coal in Havana, proceeded to Cardenas and Matanzas, where she loaded sugar in bags, consigned to the libelant. The sugar in controversy was stowed in No. 3 and No. 4 holds, and some of it was found, while being discharged, to have been damaged by water. It does not appear precisely how much of the cargo was damaged. Apparently the bulk of it was sound. But, at the top of No. 3 hatch, on the starboard side, the sugar was wet all across the hatchway to a depth of about 8 feet. Under the starboard ventilator of the same hold, a burrow, caused by water, extended down about 8 feet. Under this there was a layer of sound cargo down to a point about 3 feet from the bottom. On the bottom of No. 4 hold also, as well as of No. 3, there was a layer of damaged cargo about 3 feet thick. There was no damage elsewhere in No. 4. In each hold the damage at the bottom was on the starboard side of the tunnel. The damage at the top of No. 3 hold was caused by salt water that found its way into the hold on April 19th in the manner hereafter stated. The damage at the bottom of the holds, however, was caused by fresh water, the marks on the bulkheads showing that both holds had been flooded to a height of 2 to 4 feet. In order to determine how water, either salt or fresh, may have found its way into these holds, it is desirable to refer to the construction of the vessel in some respects, and also to the circumstances of the voyage. The Wildcroft has four holds, two on the fore side of the engine room tank, and two on the after side.

Digitized by Google

No. 3 and No. 4 holds are on the after side of the engine room, and are separated from each other by a grain-tight bulkhead. A water-tight bulkhead separates No. 3 hold from the engine room, and a water-tight bulkhead also separates No. 4 hold from the peak tank aft. The flooring under No. 3 and No. 4 holds is not water-tight, but is better than grain-tight. The average depth of the bilges below the flooring is 2 feet 6 inches. As the bulkhead between No. 3 and No. 4 holds is pierced by limber holes, these two compartments are practically one, so far as the passage of water is concerned. The vessel has five tanks: No. 1 is under No. 1 hold, No. 2 under No. 2 hold, No. 3 under the engine room, No. 4 under No. 3 hold, No. 5 under No. 4 hold, and the after peak tank is aft of No. 5. All these tanks, excepting the after peak tank, are built on the double cellular principle. No. 1 and the after peak tank were empty during all the voyage from Baltimore to Havana, and thence to Cardenas, Matanzas and Philadelphia. Nos. 2, 3, 4 and 5 tanks were filled with water for ballast at Havana after the discharge of the cargo, but when the vessel arrived at Cardenas they were pumped dry, and remained dry during the rest of the voyage to Philadelphia.

After the discharge of cargo at Havana, the sluices, holds and bilges on the ship were overhauled and cleaned. At Cardenas part of the cargo was loaded, the rest being taken on board at Matanzas. After leaving this port, each hatch was protected with a wooden cover and with three tarpaulins that were securely battened down with iron bars and wedges. On leaving Matanzas, the vessel drew about 21 feet 6 inches fore and aft, and was then in every respect seaworthy, and properly manned, equipped and supplied. The hatches were not taken off until after the vessel reached Philadelphia. During the voyage the weather was exceptionally severe, culminating on April 19th in heavy gales, tropical rain and high seas, the result being that the vessel rolled and pitched heavily, and shipped large quantities of water on deck. About 3 p. m. on that day a heavy sea tore away the three tarpaulins that covered No. 3 hatch and the starboard ventilator cover at the forward part of the hatch. New tarpaulins were lashed temporarily over the hatch as securely as the violent weather would permit, and a spare cover was put over the ventilator, but the weather did not moderate sufficiently until 6 or 7 o'clock the next morning to permit the crew to fix the tarpaulins permanently over the hatch, and thus to make it again as secure as when the vessel left Matanzas. During this interval, the vessel shipped heavy seas, the downpour of rain continued, and a considerable quantity both of sea water and of rain water entered No. 3 hatch through the joints of the hatch and down the ventilator hole. Not much water reached the bottom of either hold at this time. Both holds were sounded night and morning during all the voyage, and no more than the usual amount of water was found, 2 to 4 inches. The vessel arrived at Philadelphia on April 22d, and was taken to the libelant's wharf to discharge her cargo. Before the discharge was begun, the sugar directly under the hatch of No. 3 was found to be damaged by water. All the bags across the hatchway were wet. Under the ventilator whose cover had been washed off there was a burrow about 8 feet deep between the bags where the water had run down. The discharge began on April 23d and was continued without further incident until April 29th. At 7 a. m. of that day, in accordance with the standing orders that soundings should be taken night and morning, the pumps connecting with No. 3 and No. 4 holds were started and were worked for 15 minutes, but nothing was pumped out. About 3 p. m., however, the stevedore that was discharging the vessel, reported to the chief officer and the chief engineer, that there was water in hold No. 4. Soundings were taken immediately, and between 5 and 6 feet of water were found. There was no water in the engine room bilge, however, and the sluices in the tunnel connecting with No. 3 hold and the after wells of the engine room were then opened, and the water and molasses were pumped out, both holds being dry by midnight. The chief engineer tasted the liquid in the bottom of the hold, and found it to be molasses and fresh water. In order to determine whether any of this water had come into the ship through a leak in the hull, or in any of the ballast tanks, the vessel was thoroughly examined by Lloyd's surveyors in Philadelphia immediately after the cargo had been discharged, and before repairs of any kind had been made. No leak or injury to the hull or tanks was found, and the surveyors thereupon gave the vessel a certificate of seaworthiness.

Digitized by Google

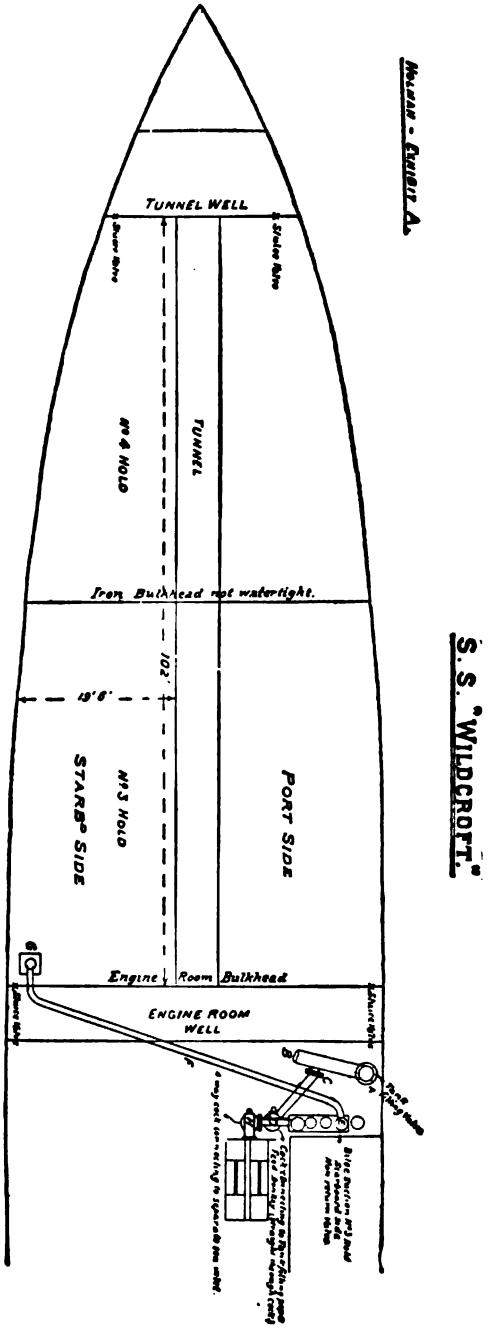

Digitized by Google

The fresh water in the holds is accounted for as follows: On the morning of April 29th, No. 3 engine-room tank was filled with fresh water from the Delaware river for ship's purposes. It began to flow into the tank at 10 o'clock and the flow was uninterrupted for three hours. A drawing showing the arrangement of pipes, connections and valves involved in this explanation, is annexed to the claimant's testimony. This drawing was prepared by a consulting engineer, who examined the vessel in London in June, 1901, before any repair, alteration or change in arrangement had been made in any of the pipes, cocks or valves in use on April 29th, when the damage was done. No. 3 tank, just referred to, is under the engine room. It is filled by opening a valve, A, in the ship's side, which admits water from the river into the tank —filling pipe AB. This pipe is connected, on its continuation below the point B, with valves in the tank-distribution box. From this box another pipe leads to the tank top. (Neither the tank distribution box nor the pipe connecting it with the engine-room tank are shown on the plan, as they have no connection with, or relevancy to the present controversy.) There is no direct connection between this tank and No. 3 and No. 4 holds. There is, however, a pipe connection, C, governed by a cock at D, that leads from the tank-filling pipe to the service-donkey, and this in turn is connected with another distribution chest, from which a pipe is led to No. 3 hold for the purpose of pumping out the bilges of that hold. This pipe is indicated by the letters EFG. At the head of this suction pipe in the distribution chest is a non-return valve, E. This valve and the seat on which it rests are made of gun metal. The valve apparently works on a hinge, so that it opens when suction is applied to it from the top by the pumps, but when the suction ceases, the valve falls back on its seat and prevents anything from entering the pipe which it covers. If, therefore, any foreign substance, such as a small piece of wood, had been drawn up the pipe FG when the pumps had been worked last on the limbers of No. 3 hold, and had become caught in the valve E, so that the valve had been wedged open, and if at the same time the cock D in the donkey service or branch pipe were open, it is apparent that water flowing from the river into the tank-filling pipe AB, leading to the engine room, would also flow through CD to the distribution chest, and down the valve E and the suction pipe FG leading to the limbers in No. 3 hold, and thence into No. 4 hold; for, as already stated, No. 3 and No. 4 are practically one hold so far as water communication is concerned. If these cocks and valves, D and E, or either of them, had been properly closed during the process of filling the engine-room tank, it would not have been possible for any water to find its way into No. 3 and No. 4 holds.

I think, therefore, that the damage to the sugar was caused by the water that went down No. 3 hold during the storms on the voyage, and by the water that flowed into the hold through the pipe line on April 29th, in the manner just described. Indeed, it is impossible that the damage could have occurred in any other way, unless some of the water that entered through No. 3 hatch on April 19th passed down the sides of the ship into the holds, and I do not think the testimony justified such a finding.

The findings of fact contained in the foregoing opinion, are not only accepted as prima facie conclusive, but, as the result of a careful examination of the testimony sent up in the record, are approved, as being founded upon the weight of the evidence. The only question in the case is, as counsel for appellant say, whether the claimant has shown such facts as to the cause of damage, as to entitle the ship to exemption under the "Harter Act."

We do not intend, nor is it necessary, to recite the evidence at length, upon which these findings are based. It suffices to say, that it clearly appears that the ship was water-tight when the cargo was loaded and when she sailed from Cuba, and that no water reached the bottoms of either No. 3 or No. 4 hold during the voyage. As we have seen, no claim was made for damage to the top of the sugar,

Digitized by Google

occasioned by the salt water that found its way through the hatches of No. 3 hold during a gale, which washed away the tarpaulins covering those hatches. This damage was clearly due to a peril of the sea. The testimony is, that both of these holds were sounded night and morning during the entire voyage, by the carpenter, and the soundings disclosed merely the usual amount of water in the bilges,—from two to four inches. All of the testimony in this respect is uncontradicted, and no facts are shown from which any other conclusion can be drawn, than that the water which came into the bottom of these holds, to the depth of several feet, doing the damage in question, came in after the early morning of the 29th of April, and before the close of that day, while the cargo was being discharged at the wharf in Philadelphia. It is not disputed that the water was fresh water, such as was the water in the Delaware river, in which she was lying. In connection with these facts, it was shown by the testimony that the sea-cock for filling the engine room tank was open at ten o'clock that morning, and kept open for a period of three hours, and that if two certain cocks, fully described in the evidence and pointed out by the learned judge of the court below, were left open by accident or design, there would be a free flow of water from the open sea-cock into the bilges of hold No. 3. Directly after the filling of the tank and the closing of the sea-cock, water to a considerable depth was reported in holds No. 3 and No. 4. This sea-cock had not been open from the time the cargo was put on board in Cuba until, as just stated, on the morning of the 29th of April, at Philadelphia. We think the court below was fully justified in its finding, that the damage here in question was due to "the water that flowed into the hold through the pipe line on April 29th, in the manner just described," and that "it is impossible that the damage could have occurred in any other way."

It is true, that the evidence upon which the court makes this finding, is in part circumstantial. We see no reason, however, why circumstantial evidence should be excluded from the consideration of the court, in its determination of the issue before it. Its probative force in this case could not be disregarded. It is certainly very strong, if not absolutely conclusive, and when considered in connection with other testimony in the case, fully warranted the learned judge in the conclusion at which he arrived. The gravamen of complainant's contention seems to be, that the court were not justified in relying upon such testimony. He objects that the claimant has not proved "a single fact as to the cause of damage, but he had a theory which the court accepted as a fact." But if all the facts in a case are consistent with one theory, explaining the ultimate fact sought to be proved, and are inconsistent with every other theory attempting such explanation, we have the very foundation upon which all circumstantial evidence rests, by which the most important issues involving life or property may be and are every day determined. And so the learned judge of the court below says:

"I adopt the theory propounded by the ship to account for the presence of the water; indeed, I cannot conceive of any other theory that is consistent with the facts, while this agrees with them all and is in conflict with none."

Digitized by Google

If the circumstances were such, that the liability of the ship depended upon the establishment of the fact that the damage in question was done by water that came through the open sea-cock on the morning of April 29th, and by the accidental or negligent opening of the two cocks, E and D, reached hold No. 3, can there be any doubt as to the sufficiency of this evidence for that purpose? We think not, and so also, we have no doubt as to its sufficiency, where the exemption of the ship from liability depends upon the same evidence.

Each of the bills of lading under which the cargo was received and carried, contains the following clause:

"It is mutually agreed that this shipment is subject to all the terms and provisions of, and all the exemptions from liability contained in the Act of Congress of the United States, approved the 13th day of February, 1893."

The third section of the act thus referred to, and known as the "Harter Act," is, in part, as follows:

"That if the owner of any vessel transporting merchandise or property to or from any port in the United States of America shall exercise due diligence to make the said vessel in all respects seaworthy and properly manned, equipped and supplied, neither the vessel, her owner or owners, agent or charterers, shall become or be held responsible for the damage or loss resulting from faults or errors in navigation or in management of said vessel."

We have no doubt that the court below was right in its conclusion, that the damage thus occasioned resulted from faults or errors in navigation or in the management of the ship. Whatever may be said as to faults in navigation, there can be no question, that the flowing of the fresh water into the hold, where the sugar was stowed, from the open sea-cock, on the morning of the 29th of April, was through the fault of the "management" of the ship, by the officers in charge. At that time, the steamship was in no sense under the control or management of her owners, or those representing them, other than the officers and crew. We agree with the general proposition laid down in several cases, that, for the purposes of the exemption of this act, the "management" of the ship extends from the loading and sailing of the ship to the delivery of the cargo. However this may be, as a general proposition, we are clearly of opinion that the fault, to which the damage was due in this case, was one solely in the "management" of the ship. The condition upon which this exemption from liability can be invoked under the third section of the "Harter Act," is that the owner of the vessel shall have exercised "due diligence to make the said vessel in all respects seaworthy and properly manned, equipped and supplied." In International Navigation Co. v. Farr & Bailey Mfg. Co., 181 U. S. 218, 21 Sup. Ct. 591, 45 L. Ed. 830, Mr. Chief Justice Fuller, delivering the opinion of the court, said:

"We repeat, that even if the loss occur through the fault or error in management, the exemption cannot be availed of unless the vessel was seaworthy when she sailed, or due diligence to make her so had been exercised, and it is for the owner to establish the existence of one or the other of these conditions."

See, also, The Southwark, 191 U. S. 1, 24 Sup. Ct. 1, 48 L. Ed. 65.

The casting of the burden of proof on one party or the other in a given case, does not destroy the presumptions in favor of a party,

Digitized by Google

which exist under the general law of evidence. Presumptions are a sort of proof and a substitute in certain stages of a case for affirmative testimony. A disputable presumption may operate as a prima facie case upon a particular point. Thayer's Prelim. Treatise on Evidence, p. 365. A presumption operating as a prima facie case, stands as proved until the prima facies is destroyed by controverting evidence. In the case before us, there is a presumption, that the owner of the steamship performed his duty, in making her seaworthy, and properly manning, equipping and supplying her for the voyage she was about to make. This presumption will support the burden of proof imposed, until it is overthrown or controverted by some evidence. The Chief Justice, who delivered the opinion of the Supreme Court in Int. Nav. Co. v. Farr, etc., supra, used this language in the case of The Chattahoochee, 173 U. S. 540, 550, 19 Sup. Ct. 491, 495, 43 L. Ed. 801:

"By the third section of that act" (the "Harter Act") "the owner of a seaworthy vessel (and, in the absence of proof to the contrary, a vessel will be presumed to be seaworthy) is no longer responsible to the cargo for damage or loss resulting from faults or errors in navigation or management."

We think there is no conflict between the two statements made by the learned Chief Justice. The burden of proving seaworthiness rests upon one who wishes to avail himself of the exemption of the third section of the act, and the presumption of fact alluded to, where not controverted, sustains that burden, or, in case of controversy, may help to sustain it.

In this case, libelant produced no controverting testimony; nothing to show any unseaworthiness, general or special. Claimant did, however, in support of the presumption, prove general seaworthiness, and by direct and circumstantial evidence, show that the sea-cock and valves, through the accidental or negligent opening of which it has been found that the damage occurred, were in good order and condition at the commencement of the voyage, and up to the time of the flooding of the hold on the 29th of April. This is testified to distinctly and affirmatively by both the captain and chief engineer, from their personal knowledge and inspection, and there is no controverting testimony produced by the libelant.

The libelant contends that, because this testimony of the captain and chief engineer were to the effect that of their "personal knowledge and inspection, the tank filling pipe, the cocks on it and on the connections between it and the distribution chest, both during the voyage and while the vessel was discharging cargo in Philadelphia, were in thorough working order and condition," it does not follow that the cocks, D and E, were closed at the time of sailing. But it is in evidence, that the water could not have found its way to hold 3, if the valve, D, had been closed, even if the valve, E, had been held open by something accidentally under it. Now valve D was located in the engine room, and was easily accessible, and, according to the testimony, it was worked every morning and evening, in pumping out the bilges of the lower hold, when it was necessarily opened. If at any time after said pumping, it was left open, this was clearly a fault in the "management" of the ship during the voyage. So also, if

Digitized by Google

valve E, which was testified to have been inspected and found in good condition and working order at the commencement of the voyage, was held open by the accident of some foreign substance being sucked under it, this accidental happening was in the "management" of the ship, and could not have been provided against by those whose duty it was to look after its seaworthiness and general condition before the commencement of the voyage. The Silvia, 171 U. S. 462, 19 Sup. Ct. 7, 43 L. Ed. 241; The Mexican Prince (D. C.) 82 Fed. 488.

Accepting, therefore, the findings of fact made by the court below, as well founded, we conclude that the damage to the cargo consigned to the libelant was due to a fault in the "management" of the vessel, within the meaning of the exemption in the third section of the act of Congress of February 13, 1893, and that the vessel was shown to have been seaworthy at the time of the loading of the cargo, both generally and in respect to the particular matters involved in causing the damage complained of.

The decree of the court below is affirmed.

(130 Fed. 529.)

MURRAY v. PANNACI et al.

(Circuit Court of Appeals, Third Circuit. May 31, 1904.)

No. 48.

1. TRESPASS—DAMAGES—FAILURE TO PROVE EXTENT OF INJURY.

In an action of trespass for removing sand from the beach in front of and upon plaintiff's lot, where there was no evidence to show the quantity taken nor from which the jury could determine the extent of the damage to plaintiff's lot, the court correctly charged that nominal damages only were recoverable.

2. SAME—EXEMPLARY DAMAGES.

To justify the imposition of exemplary damages for a trespass, there must be evidence that the injury was inflicted maliciously or wantonly, or, at least, with wrongful motive; and defendants, who removed sand from the beach in front of plaintiff's lot in the belief that it was their legal right, and ceased at once on plaintiff's making objection, cannot properly be subjected to punitive damages.

3. SAME—DAMAGES RECOVERABLE.

In an action of trespass for removing sand from the beach in front of plaintiff's lot, plaintiff is not entitled to recover as damages the expense incurred in a chancery suit, instituted against defendant to determine the rights of ocean lot owners, which is still pending on appeal.

In Error to the Circuit Court of the United States for the District of New Jersey.

A. Gordon Murray and John T. Bird, for plaintiff in error.

Edmund Wilson, for defendants in error.

Before ACHESON and GRAY, Circuit Judges.

ACHESON, Circuit Judge. Hattie G. Murray, the plaintiff, and Veronica Pannaci, one of the defendants, respectively owned a lot

¶ 2. See Trespass, vol. 46, Cent. Dig. § 144.

Digitized by Google

of ground—the two lots being contiguous to each other—at Seabright, N. J., each lot having a frontage on the Atlantic Ocean. The title to each lot extended only to high-water mark originally, but afterwards Mrs. Pannaci acquired title to land in front of her lot from the State Riparian Commissioners. The plaintiff acquired no such riparian addition. In the early part of October, 1901, by procurement of Veronica Pannaci or her husband, Hurley, the third defendant, began carting sand from the beach in front of the Pannaci lot. Prior to the 17th or 18th of October some sand was taken by the defendants from the beach in front of the plaintiff's lot, but none after the last-mentioned date. In digging and carting sand from the ocean beach the defendants were acting under legal advice, but in supposing that they had a right to take sand from the beach in front of the plaintiff's lot they misunderstood the advice of counsel. Upon the plaintiff's protest they at once desisted from taking any more sand from the beach in front of her lot. There was evidence to show that some sand was taken from the plaintiff's lot by the defendants, and also that sand was washed or fell from the beach in front of the plaintiff's lot into an excavation made by the defendants on the Pannaci lot. The trial judge instructed the jury that, while there was proof that the defendants had trespassed upon the land of the plaintiff, there was no evidence showing the extent of the damage the plaintiff had thereby sustained, and that under the evidence the jury could allow nominal damages only. The judge applied to the case the familiar rule, settled by many decisions, that although a legal injury to a plaintiff is proven, yet if the extent of the injury is not shown, nor evidence given from which it can be inferred, nominal damages only can be recovered. Lance v. Apgar, 60 N. J. Law, 447, 448, 38 Atl. 695; Leeds v. Metropolitan Gas Light Co., 90 N. Y. 26, 29; Smith v. Loag, 132 Pa. 301, 19 Atl. 137; Watts v. Weston, 62 Fed. 136, 10 C. C. A. 302. Was the court right in applying the above-stated principle to this case upon the facts shown?

We fail to discover any evidence in this record by which the jury could determine the quantity of sand taken from the plaintiff's side of the dividing line between the two lots of ground, either above the high-water mark—the limit of the plaintiff's title—or below the high-water mark, where she had no proprietorship in the soil. The quantity of sand taken was left wholly uncertain by the plaintiff's proofs, as also was the amount of sand displaced by gravity or wave action. Nor did any witness state, or attempt to estimate, the amount of damage done to the plaintiff's land by the defendants' acts complained of. The judge in his charge correctly said that "the plaintiff in this case has not shown what the value of her property was before and after the alleged taking away of sand from her own or the neighboring lot." Indeed, there was a total lack of evidence as to any decrease in the value of the plaintiff's land. As to the alleged damage to the plaintiff's bulkhead, the evidence was vague and uncertain. What part of the expenditure alleged to be needed for repairs to the bulkhead was due to the defendants' acts was not shown. Upon a careful examination of the evidence, we think that the trial judge was quite justifiable in charging the jury that there was an ab-

Digitized by Google

sence of testimony showing the amount of damage sustained by the plaintiff.

It is, however, urged that the conduct of the defendants, or some of them, was such as to justify the jury in awarding exemplary or punitive damages. But this record, we think, does not disclose such misconduct or circumstances as warranted the allowance of damages of an exemplary or punitive nature. The defendants took no sand from the beach in front of the plaintiff's lot after her objection. They ceased such taking as soon as they discovered that they had misunderstood the legal advice of counsel. Their excavation of the beach in front of the Pannaci lot they evidently regarded as a lawful exercise of the riparian rights of Mrs. Pannaci. If they were wrong in this, it seems to have been an honest mistake. In trespass, to justify the imposition of exemplary or punitive damages, something more must be shown than the doing of an unlawful or injurious act. There must be evidence that the injury was inflicted maliciously or wantonly, or with circumstances of contumely and indignity, or, at least, with wrongful motive. Day v. Woodworth, 13 How. 363, 371, 14 L. Ed. 181; Phila., etc., R. R. Co. v. Quigley, 21 How. 202, 16 L. Ed. 73; Milwaukee, etc., R. R. Co. v. Arms, 91 U. S. 489, 493, 23 L. Ed. 374; Fohrmann v. Consolidated Traction Co., 63 N. J. Law, 391, 43 Atl. 892. None of these things, we think, could be justly imputed to the defendants here under the evidence.

We think no error was committed in excluding the offer of the record in the chancery litigation in the courts of New Jersey in the suit brought by Hattie G. Murray against Veronica Pannaci. In the first place, the whole of the record, it would seem, was not offered. Then, again, that litigation was still pending in the Court of Errors and Appeals of New Jersey. It involved the unsettled question of the rights of ocean lot owners in and to the beach in front of their lots. We are wholly unable to see that in the present action the plaintiff was entitled to recover any expenses incurred by her in the chancery litigation. Especially was any such claim inadmissible here in view of the fact that at the time of this trial the New Jersey chancery suit was still undetermined.

We are not able to see that the court erred in excluding the Cooper map of 1885. The preliminary proofs entitling that map to admission were insufficient. Moreover, we cannot see that any injury was done to the plaintiff by the exclusion of the map.

Upon the whole we discover no error in this record, and the judgment of the Circuit Court is affirmed.

Digitized by Google

(130 Fed. 768.)

ARTER v. NORTHWESTERN MUT. LIFE INS. CO. OF MILWAUKEE.

(Circuit Court of Appeals, Third Circuit. June 13, 1904.)

No. 59.

1. LIFE INSURANCE — POLICIES — APPLICATION—ATTACHMENT—PHOTOGRAPHIC COPY.

A correct photographic copy of an application for life insurance, reduced in size, but legible, attached to the policy, constituted a compliance with the Pennsylvania laws (Act May 11, 1881, P. L. 20) requiring insurance companies to attach a copy of the application to policies where such application is referred to and made a part of the policy.

In Error to the Circuit Court of the United States for the Western District of Pennsylvania.

J. W. Kinnead, for plaintiff in error.

H. A. Miller, for defendant in error.

Before DALLAS and GRAY, Circuit Judges, and KIRKPATRICK, District Judge.

DALLAS, Circuit Judge. This was an action by Lydia B. Arter (plaintiff in error) against the Northwestern Mutual Life Insurance Company (defendant in error) to recover upon a policy of insurance upon the life of her husband, Winfield S. Arter, who died upon December 27, 1901. The defense was that within two years from the date of his application for the insurance he had died by his own hand, and that, therefore, the company was not liable, because the application (which was expressly made a part of the contract) contained the following agreement:

"It is hereby declared and agreed all the statements and answers written in this application, marked Part I, as well as those to be made to the Medical Examiner, marked Part II, are warranted to be true and full and fair answers to the questions and are offered to the company as a consideration for the Contract of Insurance, which shall not take effect until the first premium shall have been actually paid during the life of the person herein proposed for insurance, and while he is in good health. It is also agreed that if within two years from the date hereof, I shall pass south of the Tropic of Cancer, or be personally engaged in blasting, mining or sub-marine operations, or in the production of highly inflammable or explosive substances, or in switching or coupling or uncoupling cars, or be employed in any capacity on the trains of a railroad except as passenger or sleeping car conductor, mail agent, express messenger or baggage master, or in ocean navigation, or shall enter or be engaged in any military or naval service (except in time of peace), without a written permit therefor signed by the President or Secretary of the Company, or shall, within the said two years, either undertake an aërial voyage, or die in consequence of a duel, or, *whether sane or insane, die by my own hand*, then, and in every such case, any policy issued on this application shall be null and void."

A Pennsylvania statute (Act May 11, 1881, P. L. 20) provides (section 1):

"That all life and fire insurance policies upon the lives or property of persons within this commonwealth, whether issued by companies organized under the laws of this state or by foreign companies doing business therein, which contain any reference to the application of the insured * * * either as forming part of the policy or contract between the parties thereto, or hav-

Digitized by Google

ing any bearing on said contract, shall contain or have attached to said policies correct copies of the application as signed by the applicant, * * * and unless so attached and accompanying the policy no such application * * * shall be received in evidence in any controversy between the parties to or interested in the said policy, nor shall such application or by-laws be considered a part of the policy or contract between such parties."

The only substantial point presented by this record is whether the court below was in error in instructing the jury, with reference to the foregoing statutory provision, that a correct copy of the application was attached to the policy in suit, and in declining to submit that question to the jury. There was in fact a photographic copy attached to the policy, which comparison with the original demonstrates to be a correct one, and the only testimony upon the subject was that it is so. Therefore, if there were nothing more in the case, it would be difficult to assign any rational ground for objection to the action of the court; but the real subject of complaint is, not that the copy is not a correct one, but that it is not legible, and it has been not unreasonably urged that in fairness to the insured the original should not have been so greatly reduced in the reproduction. But the learned trial judge appears to have experienced no difficulty in reading it, and, although it has become somewhat blurred—probably since the trial—we, too, have been able to read it. Under these circumstances there was nothing to be left to the jury. The photographic print was certainly "correct," and, in the absence of any specific designation or description in the statute, we know of no more apt test by which to determine whether it should be regarded as a "copy" than that supplied by Stephen (Dig. of Ev. p. 3) in defining the word "document," which, he says, "means any substance having any matter expressed or described upon it by marks *capable of being read.*"

The judgment of the circuit court is affirmed.

NOTE BY THE COURT. The judgment in this case was determined upon prior to the death of the late Judge Kirkpatrick, and was concurred in by him.

(130 Fed. 769.)

JOHNSTON v. TURNBULL.

(Circuit Court of Appeals, Third Circuit. June 13, 1904.)

No. 23.

1. MASTER AND SERVANT—STEVEDORES—INJURIES—DEFECTIVE APPLIANCES.
Where a chain used in unloading a vessel, the breaking of which caused the death of a stevedore, had been subjected both to test and inspection shortly before the injury, and did successful service for at least one day before it broke, evidence of two expert witnesses that in their opinion a crack must have been present in the chain, and could have been seen by a careful observer, was insufficient to establish that the chain was dangerously defective at the time it was inspected.

Appeal from the District Court of the United States for the Eastern District of Pennsylvania.

For opinion below, see 124 Fed. 476.

Digitized by Google

J. H. Brinton, for appellant.
Henry R. Edmunds and J. Parker Kirlin, for appellee.

Before ACHESON, DALLAS, and GRAY, Circuit Judges.

DALLAS, Circuit Judge. This is an appeal from a decree in admiralty dismissing the libel of Margaret Johnston, widow of Michael Johnston, by which she sought an award of damages to compensate her for the loss resulting to her from his death. He, with others, had been employed to unload a cargo of iron from the steamship Fairmead, and while he was engaged in that work a chain which was used to hoist the loaded buckets broke or parted, and a filled bucket which was attached to it fell back into the hold of the vessel, where Johnston was, and so injured him that he soon after died. These facts were undisputed, but they, of course, did not suffice to support the libel. The gravamen of the cause rested in the libelant's averment that those who were in charge of the Fairmead had not exercised due care to provide a reasonably safe chain; and the only substantial question was as to whether the truth of that averment had been established by the weight of the evidence. The learned district judge found that it had not been, and we have independently arrived at the same conclusion. There was evidence that this chain had been subjected both to test and inspection shortly before it was put to the use for which, after at least one day of successful service, it proved to be unfit. That the test was not made with especial reference to the occasion in question is immaterial. It is enough that it was in fact made, and that it was amply adequate to warrant the belief that the chain was not dangerously defective. The testimony of two witnesses that they had carefully inspected it was consonant and positive, and we think the court below was clearly right in refusing to discredit them because two persons whom the libelant called as experts testified that, in their opinion, a crack must have been present, which could have been seen by a careful observer.

No useful purpose would be subserved by reviewing the evidence in detail. Its attentive consideration has satisfied us that it did not sustain the essential charge of negligence, and nothing further need be said of it.

The decree of the District Court is affirmed, with costs.

(130 Fed. 820.)

LOUISVILLE TRUST CO. v. KNOTT et al.

(Circuit Court of Appeals, Sixth Circuit. June 27, 1904.)

No. 1,290.

1. FEDERAL AND STATE COURTS—CONFLICTING JURISDICTION—PROPERTY IN CUSTODIA LEGIS.

A corporation's franchise having expired by limitation, and its assets having been delivered to a trust company appointed as liquidator of its affairs, minority stockholders filed a bill in the state court for an inspection of its books, the ascertainment of its debts and liabilities, together with a sale and distribution of its assets, and other equitable relief. The

¶ 1. Conflict of jurisdiction between state and federal courts, see note to Louisville Trust Co. v. City of Cincinnati, 22 C. C. A. 356.

Digitized by Google

corporation and its majority stockholders appeared in such suit, and pending a motion therein for an inspection of the books a creditor of the corporation obtained a collusive judgment in the federal court by confession, and obtained the return of an execution unsatisfied, and immediately filed a creditors' bill for the appointment of a receiver in the federal court, who, when appointed, took possession of the assets, which the federal court refused to surrender to a receiver subsequently appointed by the state court. *Held*, that the state court had first acquired jurisdiction of the subject-matter of the administration of such corporation's assets, though it had not first taken physical control thereof, and hence was entitled to their surrender by the receiver of the federal court.

2. SAME—DIVERSE CITIZENSHIP.

The fact that the plaintiff in a suit in the federal court, by reason of diverse citizenship, was entitled to sue therein for the establishment of his claim, did not entitle him to have the assets of the corporation administered in such court, since it would be presumed that full recognition would be accorded to his judgment by the state court.

Appeal from the Circuit Court of the United States for the Western District of Kentucky.

For opinion below, see 124 Fed. 342.

The Evening Post Company, one of the appellees above named, was organized as a corporation under the laws of Kentucky with a capital stock of $60,000, divided into 600 shares, and began its corporate life on May 1, 1878. By the terms of its charter the duration of its existence was limited to the period of 25 years, and terminated May 1, 1903. The Kentucky Statutes, 1903, § 561, however, provided that "when any corporation expires by the terms of the articles of incorporation, or by the voluntary act of its stockholders, it may thereafter continue to act for the purpose of closing up its business, but for no other purpose; and it shall be the duty of the officers to settle up its affairs and business as speedily as possible; and they shall cause notice to be published, for at least once a week for four consecutive weeks, in some newspaper printed and published in the county, if any, of the fact that it is closing up its business; and all debts and demands against the corporation shall be paid in full before the officers receive anything." On April 30, 1903, there was a meeting of all the officers and stockholders of the company, at which, against the objection and protest of the representatives of the Haldeman estate, who owned 48 shares, of $100 each, the following resolutions were passed:

"Be it resolved:

"(1) That the Columbia Finance & Trust Company be, and it is hereby appointed, liquidator of the affairs of the corporation, with directions to operate for the use of the stockholders the affairs and business of said corporation as they have been operated, until the property can be properly advertised and sold, and the possession thereof delivered to the purchaser.

"(2) That prior to the said sale liquidator shall cause to be made for the use of the stockholders a comprehensive statement of the assets and liabilities of the corporation, and furnish each stockholder with a copy of said statement.

"(3) That the said liquidator shall in its advertisements specify the nature of the articles to be sold, and shall make such sale for cash to be paid on the delivery of possession, and shall require of the purchaser that he deposit a certified check for an amount equal to one-third of the total purchase price, which the liquidator shall hold and credit upon the purchase price when the sale is consummated, or if for any reason it shall be set aside, return to the bidder. If said bidder to whom the property is knocked down shall fail at once to deliver to the liquidator the certified check as herein provided, the liquidator shall immediately resell the property and refuse to receive bids from said former bidder.

"(4) Said liquidator may, in his discretion, employ an auctioneer or other agents necessary or proper to be used in the sale of the property.

¶ 2. Diverse citizenship as a ground of federal jurisdiction, see notes to Shipp v. Williams, 10 C. C. A. 249; Mason v. Dullagham, 27 C. C. A. 298.

Digitized by Google

"(5) Until said sale, and during the operation of said property, said liquidator is given full authority and permission to employ such agents and persons as may be necessary to properly, conveniently and economically operate the company, and keep an account of all its expenses and take vouchers therefor. And after the property has been fully administered it shall make out a comprehensive account of its actings and doings, and shall furnish a copy thereof to each of the stockholders.

"(6) The said liquidator shall, from the proceeds of the sale of the property, pay all the debts of the corporation, and the balance, if any, shall be distributed among the stockholders according to their legal rights."

On the same day the Columbia Finance & Trust Company accepted the appointment, and entered upon the discharge of the duties thereof. Shortly before this, and on April 25, 1903, the representatives of the Haldeman estate, as stockholders therein, made application to the Evening Post Company to be allowed to inspect the books and records of the company for the purpose, as they claimed, of enabling them to determine what course they should pursue in relation to its affairs. This application was refused. It was renewed after the appointment of the Columbia Finance & Trust Company, and again refused by the latter, but with the statement by it that in a short time it would make out an exhibit of the assets and liabilities of the corporation, a copy of which would be furnished to each stockholder. But this did not satisfy the applicants, and they demanded the inspection of the books themselves, which was refused them.

On May 12, 1903, those stockholders filed their bill of complaint in the circuit court for Jefferson county, Ky., against the Evening Post Company, the Columbia Finance & Trust Company, Richard W. Knott, J. M. Atherton, John R. Knott, Eugene Q. Knott, and Laura G. Boyle, stating the organization of the Evening Post Company, the limitation of its existence, its capital stock, their ownership of the 48 shares thereof, and the ownership of the rest of it by the individual defendants above named; that the individual defendants had for a long time been managing the affairs of the company in their own interests, without any meeting of stockholders or election of directors; their demands and the refusals to be allowed inspection of the books above stated; the meeting of the stockholders and the passage of the resolutions on April 30, 1903; that the complainants did not know what was the indebtedness of the Evening Post Company, or to whom it was owing, or how secured, nor what assets the company owned; that the defendants were still operating the business of the company at great loss and expense; that the individual defendants were converting to their own use the entire assets of the company, including its good will; that the limitation of the indebtedness which the company might incur was $40,000, but that the defendants were claiming that they themselves were its creditors to the extent of $109,000; and that an inspection of the company's books was necessary to ascertain the real state of the company's business. The prayer of the bill was that the affairs of the Evening Post Company be wound up and liquidated; that an inspection of the books be ordered and allowed; that the defendants who are the creditors of the company be required to prove their accounts; that a reference be ordered to ascertain the debts and liabilities of the company, and that its assets be sold, and the proceeds distributed to the parties entitled thereto according to their interests; that the court shall determine whether the business of the company shall be continued pending the suit; and for all proper equitable relief. Process was issued and served on all the defendants. Then, on May 19, 1903, the complainants in that suit moved for an order requiring the defendants to permit them to have access to the books, records, and documents of the company, to enable them to inspect the same. Hearing on this motion was assigned to May 23, 1903. The defendants appeared and opposed the granting of the motion. The hearing was not completed on that day, and was postponed to May 25th, and again to May 30th, when the hearing was completed. On June 4th the court filed its opinion granting the motion. The defendants on May 23, 1903, filed their answer to the bill. While the motion for the production of the books was pending, and on May 26, 1903, Stuart R. Knott claiming to be a creditor of the Evening Post Company in the sum of $6,000, brought suit against it in the Circuit Court of the United States, and

Digitized by Google

on the same day, by consent of the company, obtained a judgment for that sum, with interest. On the day following he took out an execution, which was immediately returned nulla bona. Thereupon he filed a creditors' bill in that court, making the Evening Post Company, the Columbia Finance & Trust Company, and other parties, stockholders and creditors, who were also defendants in the case in the state court, defendants. This bill was filed in behalf not only of the complainant therein, but of all other persons similarly interested, and who were creditors of the Evening Post Company. It prayed, among other things, that a receiver might be appointed, and that he be directed to take into his possession and control all the property of the Evening Post Company, its books of account, its records, its circulation lists, and everything else pertaining to its business; that all the property of the company, including its good will, should be sold; that the court determine the means by which the publication of the Evening Post should continue pending the suit; that the debts of the company and their rank be ascertained; and that its property be sold, and the proceeds brought into court for distribution among its creditors. On the day of the filing of this bill, the complainant made a motion for the appointment of a receiver, and the court entered the following order:

"Pending the hearing of said motion, it is ordered by the court that the said Columbia Finance & Trust Company be, and it is, restrained from disposing of any part of said property, and from delivering possession of any part thereof to any person or officer, otherwise than in such manner as may be approved by this court."

All the defendants filed answers consenting to the appointment of a receiver, and on the next day, May 28th, the court appointed L. C. Humphrey, one of the appellees, receiver, who immediately took possession of the property of the company, including its books and papers. Subsequent to these proceedings in the Circuit Court of the United States, and on June 27, 1903, the state court, on motion of the complainants in the suit there pending, appointed the Louisville Trust Company receiver, and directed it to take possession and charge of the entire estate of the Evening Post Company. It having already been taken into the possession of the receiver of the United States court, the state court directed its receiver to apply to the United States court by petition asking that the assets, books, and papers of said company be surrendered to the receiver of the state court. The Circuit Court of the United States allowed the petition to be filed, but refused to grant it. From the order refusing the petition, the receiver of the state court has appealed.

John L. Dodd and David W. Baird, for appellant.

Alexander Pope Humphrey and James P. Helm, for appellees.

Before LURTON, SEVERENS, and RICHARDS, Circuit Judges.

SEVERENS, Circuit Judge, having stated the case as above, delivered the opinion of the court.

The ground on which the Circuit Court refused the petition of the receiver of the state court for the surrender to him of the assets of the Evening Post Company was that the state court had not the possession or control of the property of the company at the time when the receiver of the Circuit Court of the United States took possession thereof under the order of the latter court. The learned judge conceded what has so often been decided—that, the suit in the state court having been first commenced, if that court had taken actual possession of the property, it could not lawfully have been dispossessed by the order of the federal court. It is unnecessary to fortify the ground conceded. It has long since ceased to be debatable. The question is whether, upon the facts as they were presented to the court below, it was essential that the state court should have actually exercised its dominion over the property, in order to render the seizure thereof by

Digitized by Google

the federal court unlawful. And we think it was not essential. The reasons which support the doctrine of the conceded rule are not all the same as those which apply to the question here, but those here applicable are equally potent and persuasive to establish a similar rule for judicial action, when the power of the court over the assets has not yet been exercised, but the right to do so is essential to the objects of the suit. The corporate life of the Evening Post Company had ended for all purposes except for winding up its affairs, and it had become subject to the statutory regulations prescribed for closing up its business and disposing of its assets. A majority of its stockholders were pursuing a course of conduct with reference to the assets which, as the minority contended, was intended to further the private interests of those in the majority, was not authorized by the statute, and was in derogation of the rights of the minority. The latter filed their bill in the state court to prevent this, and to obtain a proper settlement of the company's affairs, and the court entertained it. The contention of the appellees that the bill presented only a controversy over the question of right to inspect the books of the company is not tenable. That was a mere incident. The averments of the bill were ample to present a case for the settlement of the affairs of the company and the disposition of its assets, and this was the general relief prayed. The company and the majority stockholders were made defendants, and they appeared and submitted to the jurisdiction of the state court. While a motion was pending in that case, and before a judgment thereon was rendered, a collusive judgment in the federal court was accorded to a creditor against the company by the majority who were in control of its affairs. A creditors' bill was immediately filed, the object of which was much the same as that of the suit in the state court, a receiver was appointed, and the property seized into his possession. When the state court came to decide the pending motion, which was for the production of the books and records, it found itself deprived of all power to make any effective order or decree in the case. The subject-matter of the suit, the res which its jurisdiction had been invoked to administer, and which it had undertaken to administer, had been removed by another court of co-ordinate jurisdiction and taken under its own control for administration in a suit brought subsequently for that purpose. Any decree of the state court made for the purpose of effecting the objects of the suit would be mere brutum fulmen, to use the language of Mr. Justice Grier in Orton v. Smith, infra, in describing such a situation. It is clear that such a result is not only contrary to the purpose and spirit of any orderly system of jurisprudence, but is one extremely likely to provoke a conflict, tending to discord and mischief. To avoid such conflict, most liable to arise between the federal and state courts, it has come to be settled, as we think, that, wherever a state or federal court has lawfully taken jurisdiction of a case for the purpose of subjecting assets within its territory to the charge or disposition which the law applicable to the case requires, such assets are thereby brought in custodia legis, subject to the power and control of the court, and that no other court of co-ordinate jurisdiction can, in a suit commenced while the assets are in that situation, lawfully deprive the court, which has already acquired the right of control, of the pos-

Digitized by Google

session of them. This because the possession of the res is indispensable to the exercise of its jurisdiction by the court to the end that it may be impressed by its decree. It does not seem to us important that a receiver had not actually been appointed. An appointment of a receiver would rest upon considerations of convenience, and might be made at any time during the progress of the case if occasion should arise. The conversion of the assets might be made without the employment of a receiver at all. Besides, the appointment goes upon the ground that the court has acquired control of the assets. He is a mere agent of the court. The possession is that of the court, and not his own. It is quite true that in many cases the rule has been stated in terms no broader than to include an actual possession by the court consequent upon a seizure. But it is seen that generally in such cases the exigency did not make it necessary to go beyond that limit. When the question we are now considering has been actually presented, the decisions have been quite uniformly in accord with the rule which we have indicated as the correct one. Wallace v. McConnell, 13 Pet. 136, 10 L. Ed. 95; Orton v. Smith, 18 How. 263, 15 L. Ed. 393; Chittenden v. Brewster, 2 Wall. 191, 17 L. Ed. 839; Riggs v. Johnson County, 6 Wall. 166, 18 L. Ed. 768; Farmers' Loan, etc., Co. v. Lake St. R. Co., 177 U. S. 51, 20 Sup. Ct. 564, 44 L. Ed. 667, where Mr. Justice Shiras, expressing the opinion of the court upon this subject, said:

"Nor is this rule restricted in its application to cases where property has been actually seized under judicial process before a second suit is instituted in another court, but it often applies as well where suits are brought to enforce liens against specific property, to marshal assets, administer trusts, or liquidate insolvent estates, and in suits of a similar nature, where, in the progress of the litigation, the court may be compelled to assume the possession and control of the property to be affected. The rule has been declared to be of especial importance in its application to federal and state courts."

This subject has been much discussed in two cases in this circuit, which are canvassed in the briefs of counsel here (Powers v. Blue Grass Building & Loan Association [C. C.] 86 Fed. 705, and Phelps v. Mutual Reserve Fund Life Association, 112 Fed. 453, 50 C. C. A. 339, 61 L. R. A. 717), in both of which cases Judge Lurton delivered the opinion, in the first at the circuit, and in the latter for this court. The facts in neither of these cases presented the very question we now have before us, for in the Powers Case the state court was acting as an adviser of an assignee, and was not proceeding for the purpose of affording relief to a plaintiff. The assignee was not an officer of the court, and the possession of the res by the court was not necessary to the object of the application. It was held there was no impediment to the proceeding which the Circuit Court of the United States proposed to take with reference to the assigned property. In the Phelps Case a receiver had actually been appointed by the state court in proceedings supplementary to the judgment, and for the satisfaction thereof. The order appointing the receiver impounded the debts due to the association, and directed him to collect them. Upon a bill in equity filed in the United States Circuit Court, denying the jurisdiction of the state court to render the judgment mentioned or to appoint the receiver, the federal court granted an injunction restraining the

Digitized by Google

plaintiff and the receiver in the state court from executing the order of the latter for the impounding and collection of the assets of the association. Finding, as we did, that the state court did not lack jurisdiction, we held that this action of the federal court was an unlawful interference with the right and power of the state court. The difference between the Phelps Case and this is that in the former the state court had taken action toward the appropriation of the assets to the object of the suit by seizure, while in the present case that step had not yet been taken. In both of the cited cases the doctrine is announced in terms broad enough to cover a case where actual possession may not have been taken by the court which first acquired jurisdiction.

The following cases in other Circuit Courts of Appeals are directly in point: Merritt v. American Steel Barge Co., 79 Fed. 228, 24 C. C. A. 530, 49 U. S. App. 85; Adams v. Mercantile Trust Co., 66 Fed. 617, 15 C. C. A. 1, 30 U. S. App. 204; Zimmerman v. So Relle, 80 Fed. 417, 25 C. C. A. 518; Memphis Sav. Bank v. Houchens, 115 Fed. 110, 52 C. C. A. 176; Baltimore & O. R. Co. v. Wabash R. Co., 119 Fed. 678, 57 C. C. A. 322, certiorari denied 187 U. S. 650, 23 Sup. Ct 848, 47 L. Ed. 349. And see 2 Bates, Fed. Procedure, § 613.

In harmony with it, and designed to give it full operation, is another rule, which is that whenever in such case a third party claims some interest in the property which has been subjected to the control of the court, he may intervene in the pending case, and become a party thereto, for the protection of his interest, as explained in Krippendorf v. Hyde, 110 U. S. 276, 4 Sup. Ct. 27, 28 L. Ed. 145; Gumbel v. Pitken, 124 U. S. 143, 5 Sup. Ct. 616, 28 L. Ed. 1128, and numerous other cases of like character decided by the Supreme Court, or, if that interest be such that it survives the exercise of the jurisdiction in the pending case, he may stand aloof and pursue his remedies after the property has been discharged by the court which has had it under its control. We are not now concerned with suits in personam, in regard to which other reasons may prevail to a different result. The case of Moran v. Sturges, 154 U. S. 256, 14 Sup. Ct. 1019, 38 L. Ed. 981, though at first blush it might seem to the contrary, is not in conflict with the current of modern decisions. In that case the claim of the plaintiff was of a maritime nature, of which the federal court alone had jurisdiction. The state court did not have power to deal with it. The two courts were not of concurrent jurisdiction. The plaintiff could not by intervention confer upon the state court a jurisdiction which it did not by law possess. The authority of the federal court was paramount and exclusive.

It does not matter that the plaintiff in the present case was not a party to the case in the state court, or that by reason of his citizenship he had a constitutional right to bring his suit in the federal court. Perhaps he might have maintained it there for the purpose of establishing his claim. He could then go into the state court which had the control of the assets of his debtor, and secure the recognition of his right thus established. Byers v. McAuley, 149 U. S. 608, 13 Sup. Ct. 906, 37 L. Ed. 867. The presumption must be that such recognition would be given by the state court, and his lawful rights duly accorded to him. It is not even charged in his bill that any one is

Digitized by Google

attempting to defraud the plaintiff, or is proceeding without right, or to the prejudice of any right of the plaintiff; and, on the whole record, we see no other hindrance to the plaintiff by the suit in the state court than such as is ordinarily incident to legal proceedings.

The state court took the proper course when it directed its receiver to apply to the court below for the surrender to it of the assets of the company, and we think there was error in refusing the application when the facts were made known to the latter court.

The order appealed from must be reversed, with costs, and the cause remanded, with a direction to grant the petition of the receiver of the circuit court for Jefferson county.

(130 Fed. 827.)

McMILLAN v. GRAND TRUNK RY. CO. OF CANADA.

(Circuit Court of Appeals, First Circuit. July 6, 1904.)

No. 511.

1. MASTER AND SERVANT—DEATH OF SERVANT—RAILROADS—INEXPERIENCED SERVANT—FAILURE TO INSTRUCT—EVIDENCE.

Where plaintiff's intestate, a boy 17 years of age, who had gone into defendant's railroad yard with an experienced servant for the purpose of receiving instructions as to the manner of coupling cars, was killed between two cars, proof that the servant who was with deceased was himself young, coupled with the mere fact that deceased was injured, without evidence as to how the injury occurred, or that there was in fact a failure to instruct, was insufficient to establish defendant's negligence.

2. SAME—VIOLATION OF ORDERS.

Where deceased was ordered to accompany an experienced servant into a railroad yard, to receive instructions as to coupling cars, by defendant's superintendent, and who yet did not comply with the instructions of the engineer with whom he was working, that he should not go between the cars, but that he should watch his instructor in the work, and who received the injuries from which he died while between two cars which were being coupled—the engineer being without knowledge of his position at the time—defendant was not liable for his death.

Aldrich, J., dissenting.

In Error to the Circuit Court of the United States for the District of Maine.

Benjamin Thompson, for plaintiff in error.

Clarence A. Hight (Leroy L. Hight, on the brief), for defendant in error.

Before COLT and PUTNAM, Circuit Judges, and ALDRICH, District Judge.

PUTNAM, Circuit Judge. This writ of error involves a claim for damages arising out of the death of a boy employed by the defendant corporation, who, as the plaintiff alleges, was set to work coupling freight cars, and was fatally injured while coupling them. The learned judge in the Circuit Court directed a verdict for the defendant, to which the plaintiff below, now the plaintiff in error, excepted, and thereupon brought her case to us. In addition to the other issues

Digitized by Google

which we will state, the plaintiff alleged in the Circuit Court that the defendant, and the cars in use at the time the injury occurred, were each engaged in interstate commerce, and that the cars were not provided with automatic couplings as required by the statutes of the United States. This, however, has disappeared from the case as presented to us.

The plaintiff's case was perhaps deficient in some respects other than in those which we will particularly consider. With reference thereto, however, we are not to be understood as expressing any opinion. The intestate was John McMillan, aged 17 years. He was to relieve temporarily another boy, John Parker, who was about to take a vacation, and Parker had been directed to instruct McMillan in reference to his expected duties. The plaintiff's evidence describes the automatic couplers and their operation, although not very clearly—probably in consequence of the fact that, as the record shows, a coupler was produced in court, and its operation exhibited. However, we are bound to assume, as claimed by the plaintiff, that, under the circumstances involved in the issue before us, it was necessary or desirable that whoever was attending the coupling should sometimes go between the cars for opening up what is known as the "knuckle." It must also be assumed that coupling any cars which are being switched is of such a character that a boy of tender age should be instructed or cautioned in reference to it before being permitted to undertake it. It is not questioned that the deceased stood as a servant. Huntzicker v. Illinois Cent. R. Co., 129 Fed. 548, 64 C. C. A. 78.

It is claimed by the plaintiff that there was sufficient to justify the jury in finding that the method in which the injury occurred was as follows: The track on which the cars were being switched was inclined to such an extent that they would sometimes start unless the brakes were set. At the time the locomotive was pushing two cars, and endeavoring to couple on a third, the locomotive being headed towards the cars. The third car did not couple, but, instead, was pushed up the track a short distance. The car which had not been coupled came back on the track, and either struck the second car ahead of the locomotive, or came within a few inches of it; and in consequence thereof the plaintiff's intestate, who was between the cars with Parker, helping to open up the coupling, was caught and injured. The particular fact to which we call attention in this statement is that McMillan was between the cars, helping Parker, when he was injured.

The pleadings are of a confused character. It is difficult to ascertain precisely on what points they rest. However, as the case is presented to us, everything sifts out, except the proposition that the defendant was in fault for not causing McMillan to be properly instructed before he went between the cars, as claimed by the plaintiff, for the purpose for which he is said to have gone there. The declaration should have been properly purged on demurrer, but, not having been, and there being in the record no ruling or opinion of the learned judge who presided in the Circuit Court showing on what grounds the case proceeded, we are compelled to resort to the propositions made by the plaintiff at bar in order to ascertain wherein the defendant is claimed to have been chargeable.

Digitized by Google

Each count alleges that the plaintiff's intestate was caught between two cars, which we have already said the plaintiff makes an emphatic element of her case, as stated to us on this appeal. Passing by the plaintiff's propositions which it is not necessary to contravene—first, that we should not give particular weight to the peremptory ruling of the court below; second, that Vliet, the superior representative of the defendant with reference to the work to be done, knew that the plaintiff's intestate was to assist in shifting during Parker's absence, and was to be taken out into the yard by Parker for instruction, and that he was out there for that purpose; third, that, if the defendant makes any claim of contributory negligence on the part of McMillan, the burden is on it with reference thereto; and, fourth, that the case presents some questions peculiarly within the province of the jury—we are left only three questions. One seems to be based on the sweeping assertion that, in any event, Vliet was guilty of negligence in employing McMillan as a substitute for Parker. One count does apparently contain an allegation that the plaintiff's intestate was "carelessly, negligently, and improperly ordered and directed to go out into the yards and assist in the shackling"; but it fails to state wherein the negligence consisted, as does also the like proposition made at bar by the plaintiff. However, the evidence fails to show that McMillan was sent out into the yard to "assist" in shackling. On the other hand, it shows that, if he was sent out at all, it was for instruction. The exact expression was, "Break him in."

In this connection the plaintiff relies on Railroad Company v. Fort, 17 Wall. 553, 21 L. Ed. 739. There the boy who was injured, and who had been put to work by his father, was employed in what was not dangerous, and was suddenly ordered to engage at once in work among rapidly revolving machinery. It was held, at page 558, 17 Wall., 21 L. Ed. 739, that this was not what his father engaged he should do, and that one of his age could not be understood to know the peril thereof. The case is essentially unlike that at bar, in the fact that the injured boy was not sent out for instruction, but to do immediately a piece of work of a dangerous character. There is nothing in the record, or in facts of common knowledge, which would justify a jury in finding that a boy of McMillan's age might not properly be instructed so as to do with safety this switching, which was of a purely incidental character. On the whole, this does not represent any true issue in the case.

The remaining propositions are essentially alike: First, that the duty of instructing a green and inexperienced servant was a personal obligation on the part of the defendant, and that, if Parker was delegated to perform that duty, and failed to instruct, or was incompetent to do so, his negligence or incompetence was the defendant's negligence, which we do not question; and, further, that the plaintiff's intestate was in fact set to work without instruction, and that Parker was incompetent to instruct, and did not, in fact, instruct. The case refers to the fact that the track where the switching was being done was not wholly at grade, but in this there was nothing unusual. Neither is it made the basis of a substantial claim. It, of course, increased the necessity of instructing or cautioning McMillan, and nothing more.

Digitized by Google

Before proceeding further, we desire to make some observations with reference to a conversation which occurred immediately after the accident, put into the case by the plaintiff, apparently under objections by the defendant. This conversation was participated in by all who were present at the time of the injury, including the engineer, Sloane, to whom we will refer again, and Parker, who was the only one who really knew how it occurred. Parker deceased without his evidence being taken. On what ground and for what purpose the plaintiff was allowed to put in this conversation is not disclosed. It was first objected to without any ground of objection being stated, which, of course, was insufficient. After some conversation between the court and counsel, both retired to chambers, and, after consultation there, the evidence was admitted. The record contains no statement on the part of the plaintiff why he claimed to introduce the evidence, except, in a general way, that it was a part of the res gestæ, or why the defendant objected thereto, and no ruling by the court which enables us to comprehend its position. We are not certain, therefore, whether we would be able to regard this conversation if it became essential. In our view of the case, however, it did not, because all it covered was two facts—a statement by Parker that McMillan was in the yard with him while he was switching, and that Vliet was told that McMillan had been taken out into the yard, and Vliet did not remonstrate. In our view of the case, the first fact, as claimed by the plaintiff, is immaterial, and the second is both immaterial and inconsequential, for the following reason: The question put to Vliet by the plaintiff was in the following form: "Did you make any objection at that time to Mr. Sloane for taking him out?" This was admitted under a general objection taken by the defendant, and an exception allowed. The record, however, shows that Sloane had no connection with taking the McMillan boy into the yard, and did not even know that he was there.

In order to understand the bearing of the plaintiff's propositions which we have referred to, we must develop her statement of the case further. The day before the accident, the boy Parker asked Vliet for leave to go on a vacation, and finally suggested McMillan to fill his place in his absence. Vliet consented, but told Parker to take him out the next morning, which was Saturday, and "break him in." Parker's vacation did not commence until the following Tuesday or Wednesday, so that there were three or four days for instructing McMillan. The work of switching and shifting was on a siding connected with the roundhouse, and related mainly to cars of merchandise and coal for use therein, cars loaded or to be loaded with cinders, and all sent in from the main track. About 7 o'clock on Saturday morning there was occasion to shift out a car of oil and an empty box car, and Parker had McMillan with him. After this work was finished, which took from 35 to 40 minutes, McMillan went back to his work in the roundhouse, where he had been employed for a few weeks as a cleaner of locomotives. About half an hour later, Parker told Sloane, the engineer, that a cinder car needed to be shifted, and about five minutes afterwards Sloane took his engine out for that purpose. In making this second shift, he never saw McMillan until after the injury. He, however, communicated with Parker while shifting. He had coupled to two

Digitized by Google

cars, toward which his locomotive headed. The purpose was to couple the cinder car at the tail of the other cars. He called out to Parker: "Frank, how are you fixed?" Parker replied: "All right, Jim; come ahead!" Sloane came ahead, and, when the second and third cars came together, they did not couple. The third car went up the track a short distance, and then Parker disappeared between the cars which failed to couple, and Sloane lost sight of him. Parker came out from between the cars, and afterwards again disappeared from Sloane's view; and at that time the third car, which had failed to couple, came back, and either struck the second car, or came within a few inches of it. At this time the engineer saw an ash-pit man named Johnson give a signal. He immediately stopped his engine, stepped to the fireman's side of the locomotive, and saw Parker on the left-hand side of the track, between the cars that failed to couple, leaning over McMillan. This was the first that Sloane knew that McMillan was there, and is all the evidence which the case discloses with reference to the manner in which McMillan came there, except so far as the conversation with Vliet, already referred to, stated that he went out with Parker; and this, moreover, is all the evidence as to the way in which the injury happened.

These statements are drawn almost entirely from the plaintiff's proofs, and all of them are in harmony with the position which the plaintiff takes. She calls our attention to no facts tending to support any essential allegations beyond those which we have related. Of course, the plaintiff's propositions involve the necessity of proving that McMillan, the plaintiff's intestate, was injured in consequence of a failure to properly instruct him. The mere fact that Parker was himself young, coupled with the other mere fact that McMillan was injured, leaves a gap which the plaintiff has utterly failed to fill, because, notwithstanding all that, she must show that there was in fact this failure to instruct. The plaintiff does not prove incompetence on the part of Parker to instruct, nor inexperience. On the other hand, the record shows beyond dispute that Parker was experienced, and that he was trusted by his employers in and about this work. Indeed, the only evidence with reference to Parker's qualifications is that he was apt. The record fails to show any inexperience or lack of competence to instruct on the part of Parker, or any other fact to justify the jury in undertaking to assume a failure on his part to instruct. Therefore the verdict for the defendant might be sustained because this gap was not supplied, if for no other reason.

However, we can put the case on a proposition which perhaps will appear more just, because it leaves nothing to mere presumption one way or the other, but is direct and conclusive to the point that McMillan was instructed, whatever Parker did or failed to do. Sloane, the engineer, was called by the plaintiff, and no effort was made to impeach his character or his testimony, and there is no suggestion that this could have been done. He testified with reference to the first switching in the early morning of Saturday:

"Q. When you went out on the 14th of June, 1902, who went with you? A. Frank Parker.

"Q. Anybody else? A. This boy, McMillan.

"Q. Did they both get into the cab with you? A. No, sir.

Digitized by Google

"Q. How? A. Parker jumped on the front of the engine, and I stopped. The first thing I said, I says, 'Parker, where is that boy going to?' His place was in the shop, and I knew that. He says, 'He is going to take my place.' I says, 'Where you going?' He says, 'Going to Boston.' I says, 'When?' He says, 'Tuesday or Wednesday of next week.' I says, 'Young man, come here.'

"Q. Now, before you go on, is that all the conversation you had? A. Up to that time. I says, 'Don't you attempt to make a coupling.' I says, 'You come on the yard and watch Parker, how the work is done.'

"Q. At that time, did you have any talk with him, as to whose orders he came out there on? A. I says to Parker—when I says, 'Whose orders?' he says, 'The boss's.'

"Q. What did you do then? A. I jumped on my engine, and went out to the side track and coupled on a car of kerosene oil and an empty box car; and before I started to move I told this boy the second time, I says: 'Don't you attempt to go in between those cars at all. You see Parker do the work for three or four days.' I left then, those two cars—placed one on one track, and one on the other, to transfer nine barrels of kerosene oil to be shipped away. I told the boy to go back in the shop after he was done, probably for an hour or two."

Therefore, whatever McMillan received or failed to receive from Parker, he had these positive instructions from the engineer, who was the superior on the ground. These, if obeyed, would have prevented the accident, which, in accordance with the statement made by the plaintiff at bar and in her brief, as well as in her pleadings, to which we have already referred, occurred by his being caught between the two cars. There is no way of meeting this, looking at the well-known authority of such an engineer over those who are working with him, and his well-known right to command them; and there can be no question that McMillan was bound to obey these instructions. These instructions were sufficient as against every danger, including that arising from the grades of the track; and, coming as they did from the representative of the defendant corporation on the ground, they meet and avoid every suggestion of negligence.

It may be thought that McMillan might assume that Vliet was the superior over all, and therefore might regard his instructions to Parker to "break him in" as superior to the order given him by Sloane, but it is to be remembered that the record nowhere shows that McMillan knew what Vliet's orders were. They were communicated to Parker, and not to him. However, the reasonable view of any suggestion of that character would be that, whatever orders Vliet might have given were necessarily and clearly of a general character, subject to be supplemented or modified by the person in charge on the ground where the work was being done, as there was occasion therefor. The plaintiff herself makes no suggestion of the kind we have last referred to; nor does she make any suggestion with reference to the orders which Sloane gave McMillan, except a general one that the jury was not bound to accept the testimony of any one witness. She cites some authorities on this latter proposition, none of which would be questioned, and all of which are remote from the case at bar; but she fails to criticise Sloane's testimony in any particular, or point out anything in it which would justify the jury in rejecting it, or would excuse the court from setting aside the verdict if it had done so, or anything whatever, except, as we have said, the citation of some decided cases, without any attempt to show how they apply to the facts before us.

Digitized by Google

Independently of other propositions, we are clear that the judgment of the Circuit Court should be sustained by reason of those on which we have enlarged.

The judgment of the Circuit Court is affirmed, and the defendant in error recovers its costs of appeal.

ALDRICH, J. (dissenting). I incline to the view that the plaintiff should have been permitted to go to the jury upon the third count of the declaration, which alleges that the track was constructed on such a grade that cars would move by gravitation, unless trigged, the brakes set, or some other provision made to prevent such movement, and that an inexperienced boy, sent to perform work in a dangerous place without suitable instructions as to the manner in which the dangers were to be avoided, was caught between two cars which came together by reason of such faulty construction and grade.

The McMillan boy, who was an inexperienced youth, was sent by a foreman and superintendent into the railroad yard, or a place for hauling, shackling, shunting, and moving cars, to be broken in by a Parker boy, who had had some experience. It is true, the engineer testifies that he told the McMillan boy not to attempt to make a coupling, but to watch Parker and see how the work was done; but, taking the instructions altogether, they were, from the superintendent, that he should go into the yard to be broken in by the Parker boy, and from the engineer, not to attempt to make a coupling, but to watch how the work was done.

Although it is admitted by the defendant's witnesses that the track was so constructed that cars kicked back or knocked ahead would, unless trigged, sometimes return of their own motion, there is no evidence that the deceased boy knew of, or was cautioned against, such danger. It appears from the evidence of Sloane that cars attached to the engine were thrown against a car which did not couple, and which was thrown back a few feet, and, recovering from the force, moved back toward the train of its own motion; and, although the witness says that on its return it did not strike the other car, it did come within three or four inches—sufficiently near to crush the boy and cause the injury complained of. It is quite evident that the McMillan boy was not killed between the cars where the Parker boy was coupling, but between cars that failed to shackle and came back again. This appears from the evidence of Sloane, in his answers to interrogatories 95, 96, and elsewhere.

The oral evidence as to the particular manner in which the injury was sustained is very meager, but there is nothing in the case to show that the boy was killed while disobeying the instructions of the engineer. The injury and the dangerous condition of the tracks being conceded, I think the plaintiff was entitled to go to the jury upon the question whether the injury was caused by a creeping car on an inclined track while the boy was watching how the work was being done. Indeed, I think it highly probable that the boy was crushed by a car which quietly came down the track and caught him unawares while watching the work, the operations, and the movements of the train in

Digitized by Google

coupling. The whole situation tends to establish that beyond reasonable question.

The third count is evidently constructed upon the theory that the boy was caught between two cars which came together by reason of the faulty and inclined condition of the track. It is true, the count in question alleges that the boy was caught while coupling cars; but, I take it, recovery could be had upon a count so constructed if the evidence should disclose that he was injured by the fault of the defendant while not in the act of coupling, but while watching the work which he was learning how to do under instructions to that end.

Contributory negligence being a defense rather than an element of the plaintiff's case, the plaintiff was entitled to go to the jury upon the question whether the injury resulted from the boy's being involved in a faulty and dangerous situation, about which he had not been properly warned.

(130 Fed. 834.)

LAZIER GAS ENGINE CO. v. DU BOIS.

(Circuit Court of Appeals, Third Circuit. July 5, 1904.)

No. 38.

1. TRIAL—EVIDENCE—WITHDRAWAL—CURING ERROR.

In an action for breach of contract the erroneous admission of irrelevant evidence respecting certain profits sued for was cured by a positive instruction directing the jury not to consider it.

2. SALES—MANUFACTURED ARTICLES—BREACH OF CONTRACT—PROFITS—DAMAGES.

Where, in an action for breach of a contract to manufacture and sell certain machinery, plaintiff showed that the average profits made during the 16 months in which the contract was performed was $911 per month, a verdict allowing plaintiff profits at that rate during the 8 remaining months of the contract period after breach was not objectionable on the ground that such profits were remote and speculative.

3. SAME—NEW TRIAL—INSTRUCTIONS—NONCOMPLIANCE.

Where a verdict on the whole was just, and certain instructions as to the measure of damages given by the court, and apparently disregarded by the jury, were erroneous, the court was not bound to grant a new trial on the ground that the jury disregarded such instructions.

4. SAME—REVIEW.

Neither the verdict of a jury nor the exercise of the trial court's discretion in refusing a new trial may be reviewed on appeal to the Circuit Court of Appeals unless the court's discretion in denying a new trial was abused.

In Error to the Circuit Court of the United States for the Western District of Pennsylvania.

W. B. Rodgers, for plaintiff in error.
E. L. Adams, for defendant in error.

Before DALLAS and GRAY, Circuit Judges, and KIRKPATRICK, District Judge.

¶ 2. Contracts for sale of articles to be produced or manufactured, see note to Star Brewery Co. v. Horst, 58 C. C. A. 363.

Digitized by Google

GRAY, Circuit Judge. The action in this case was brought to recover damages for the breach of a written contract between the parties, dated June 28, 1900. The plaintiff in error was the defendant below. The plaintiff recovered a verdict for $34,250, of which amount $2,500 was remitted, and judgment was entered for $31,750. The parties here will be spoken of as plaintiff and defendant, as they appeared in the court below. By the contract sued upon, the defendant, who was the owner of a plant for the manufacture of machinery of all descriptions, agreed to manufacture gas and gasoline engines, of various sizes, for the plaintiff at fixed prices. The contract contained the usual stipulations, that the engines should be manufactured in a first-class manner, of first-class materials, and be thoroughly inspected and tested by defendant, who was to have the exclusive right to manufacture said engines during a period of three years, the plaintiff being required to order not less than 125 engines in each year. The plaintiff agreed to furnish all patterns and blue prints, which defendant was to keep in repair and return to plaintiff at the expiration of the contract, and to pay for all engines on the 15th of the month following the month of shipment. On October 20, 1902, defendant refused to proceed any longer under his contract, alleging as a reason therefor, certain conduct on the part of the plaintiff.

The claim of the plaintiff in the suit was for damages for nondelivery of engines under the contract, and for defective construction in some of those that were delivered, and the outlay and expense occasioned thereby to the plaintiff. Proof was offered and admitted, of profits actually lost on 215 engines, ordered but not delivered, which amounted to $21,865.81. Proof also was offered as to profits which could have been made upon engines neither ordered nor delivered, by reason of the repudiation of the contract by the defendant, on October 20, 1902. Such profits, based upon the average monthly profits on the engines actually delivered, were estimated variously at $7,288 and $14,400. Loss resulting from repairs to defective engines was estimated at $3,000. Proof of loss to a large amount, resulting from expenditures of various kinds incurred by plaintiff, as it was claimed under the contract, for advertising, establishing agencies, and promoting in other ways the sale of the engines, was offered and admitted, over objection by the defendant.

Upon further consideration, and in his charge to the jury, the learned judge expressly withdrew from their consideration all the proofs of loss above mentioned, except that relating to profits that would have accrued on engines ordered and not delivered, and the $3,000 expended for repairs on engines that were delivered, thus confining their attention to proofs showing an aggregate loss of about $25,000. The verdict, as before stated, was for $34,250. A motion for a new trial was made by the defendant, which, after argument and for reasons stated in the opinion of the learned judge, was refused upon the plaintiff's agreeing to file a remittitur for $2,500, and judgment was accordingly entered for the sum of $31,750. A writ of error was accordingly sued out by the defendant, and the case brought here on thirty-two specifications of error, all of which charge an improper admission or exclusion of evidence, except one, which relates to an

Digitized by Google

incidental charge of the court, and which is not referred to in the brief of counsel.

As nearly all the evidence admitted over the objection of the defendant, and to which the bills of exception relate, was afterwards withdrawn from the consideration of the jury, who were expressly instructed not to regard the same in making up their verdict, the plaintiff in error devoted his argument to the propositions, that it was too late for the court, after having admitted the testimony objected to, to withdraw the same from the consideration of the jury in its final charge, and that the court transcended its power in allowing a verdict to stand for a larger amount than was warranted by its instructions to the jury. We are therefore relieved from the consideration in detail of the numerous specifications of error, and discussions of the relevancy of testimony offered and admitted, and afterwards withdrawn, by this succinct statement of the question involved, made by plaintiff in error in the opening of his brief:

"Statement of Question.

"(1) The admission of evidence as to damages claimed to be irrelevant, and if irrelevant, was it cured by the instructions of the court in the charge?

"(2) The act of the court in allowing damages to plaintiff upon a claim not submitted to the jury."

An understanding of the merits of the question thus concisely stated, will be promoted by considering, first, the following extract from the opinion of the court below, in refusing the motion for a new trial:

"This was a suit brought by the Lazier Gas Engine Company against John E. Du Bois to recover damages for breach of a contract made by him to manufacture gas engines. The case was largely one of fact and involved intricate questions of the character of work done in the manufacture of engines, repairs, reshipments and a general accounting. The jury was sworn on May 13, 1903, and after a protracted trial covering more than three weeks, and sessions each day of more than the usual length, resulted in a verdict for the plaintiff for $34,250. The trial was expensive to both parties, not only because a number of the witnesses were high-priced men, but from the fact that five counsel of large practice took part in the protracted sessions. A new trial is now sought on the grounds, first, that the verdict was excessive, and second, that it was not justified by the charge of the court.

"In view of the great expense involved to all parties in a retrial, the loss of time to counsel and court spent in fruitless work if this verdict is disturbed and of the effect so protracted a case has on the rights of other suitors in practically monopolizing an entire term, we are exceedingly loath to grant this motion. And our unwillingness to do so is increased by the consideration that the jury which passed on this case was made up of men of unusual capacity. A number of them were men of affairs, and after an unusually patient and attentive hearing of the proofs, their verdict shows they found for the plaintiff on all the underlying and fundamental facts on which the case must eventually turn on a retrial. The finding of such a jury, especially when its members had opportunity to give full and deliberate consideration, afforded by the long trial, to the acts of both parties under the contract is to that extent an index of the common judgment of fair-minded men upon the facts of this case and of the possibly fruitless result to the defendant of any ultimate change of finding touching the fundamental facts if a retrial was granted. An analysis of the verdict, as stated in the defendant's brief on this motion, shows that included therein were the following items of damage: Profits on 90 engines not delivered during the first year of the contract, $8,-

Digitized by Google

852.09; on 125 engines during the second year, $13,000; plaintiff's repair bill of defective engines, $3,000. The verdict was for $34,250, being an excess of some $9,400 over and above this claim. Deducting the eight months' interest, or allowance in the nature of interest, which the jury would naturally allow, we have a net amount of about $8,000, which it is contended is an unwarranted excess under the instruction of the court. This excess is for a claim made by the plaintiff for the value of the contract in profits for its last eight months, which profits, under the instructions of the court, the jury were instructed not to allow. All the relations between the parties were severed about October, 1902, and the defendant then announced his intention of doing nothing further under the contract. It therefore appears that to the extent of some $8.000 the jury disregarded the instructions of the court in rendering their verdict, and if a clear and unwarranted disregard of instructions were all that was involved in the case, our duty to grant a new trial would be clear. But it would further seem that when substantial justice has been done by a verdict, a new trial will not be granted on account of the jury's disregard of instructions, unless there has been an abuse of discretion. Christy v. Holmes, 57 Ind. 314. And to this principle may be added the analogous one that if a court errs in its statement of the law in instructing the jury, a verdict based on a disregard of such instructions should not be set aside. Armstrong v. Keith, 3 J. J. Marsh. 154 [20 Am. Dec. 131]. Such being the case it becomes our duty to review our instructions to the jury that the plaintiff's recovery was limited to the profits upon the 215 engines ordered and not delivered during the working part of the contract and that they were not entitled to recover any loss of prospective profits during the eight months of the contract remaining after the break. Whether our instructions were misunderstood by the jury, or whether they felt such instructions were contrary to their sense of right is not material to inquire; for some reason they have allowed the plaintiff for its remaining claim, viz., profits for the eight remaining months of the contract, or in other words for its value. An examination of the proofs shows that the data for assessing such damages substantially to the amount allowed by the jury existed in the case. Deducting the three months' leeway provided by the contract for preparation it was shown that the defendant failed during the first year to deliver 90 ordered engines, on which the profits would have been $8,852.09, and during the remaining working months of the contract, 125 ordered engines, on which plaintiff's profits would have been $13,013.72, or a total profit of $21,863.81, during the 24 delivery months of the contract, that is, a monthly profit of about $911. Based on this ascertained monthly profit of $911, the jury had facts from which they could assess $7,288 of profits for the remaining eight months. It will thus be seen that if such facts and proof afford in law a sufficiently certain basis for the assessment of damages the jury were to that extent warranted in their action and no injustice was done by their verdict. The question of what damages are recoverable for breach of contract is most troublesome and by no means clear under the authorities in application to the facts of each particular case. A more careful examination of the subject than the pressure of the closing day of this trial afforded satisfies us that the practical sense of this jury, in ascertaining the damages, not only made a wise application of this contract to the facts in evidence, but that their view is well supported by the adjudicated cases."

An examination of the record, in connection with this statement by the court below, brings us to the conclusion, that the first branch of the question, as stated by the plaintiff in error, to wit, whether the admission of irrelevant testimony by the court was cured, by its instructions to the jury to disregard the same, must be answered in the affirmative. We cannot see what injury to the plaintiff was done by the admission of any of this testimony that could not be cured by such positive instructions. In the hurry of a jury trial, it must often happen that the court is required to pass upon questions of the admissibility of evidence, without opportunity for the mature considera-

Digitized by Google

tion that is desirable. In such cases, a prudent judge will admit the testimony de bene esse, subject to its being withdrawn from the consideration of the jury, upon fuller examination. In no other way can these questions receive the attention due as well to the litigants as to the administration of justice. If the evidence should be excluded in the first instance, there is no opportunity afterwards to introduce it, should it be considered admissible. Sound policy requires that the conservative exercise of this right on the part of the trial judge should not be interfered with.

There was nothing in the testimony admitted in this case over the objection of the defendant, and afterwards withdrawn by the judge, that tended to appeal to the passions or prejudices of the jury. It was evidence, that in this respect was colorless and indifferent, such as that relating to the expenditure of money by plaintiff, for the purpose of advertising the engines to be furnished by defendant, and of constituting agencies in different parts of the country for the sale of the same. Mr. Justice Harlan, in delivering the opinion of the Supreme Court, in Pennsylvania Company v. Roy, 102 U. S. 451, 458, 26 L. Ed. 141, states the rule in this regard so clearly and persuasively, that we here quote his language:

"Notwithstanding this emphatic direction that the jury should exclude from consideration any evidence in relation to the pecuniary condition of the plaintiff, the contention of the defendant is, that the original error was not thereby cured, and that we should assume that the jury, disregarding the court's peremptory instructions, made the poverty of the plaintiff an element in the assessment of damages; and this, although the record discloses nothing justifying the conclusion that the jury disobeyed the directions of the court. To this position we cannot assent, although we are referred to some adjudged cases which seem to announce the broad proposition that an error in the admission of evidence cannot afterwards be corrected by instructions to the jury, so as to cancel the exception taken to its admission. But such a rule would be exceedingly inconvenient in practice, and would often seriously obstruct the course of business in the courts. It cannot be sustained upon principle, or by sound reason, and is against the great weight of authority. The charge from the court that the jury should not consider evidence which had been improperly admitted, was equivalent to striking it out of the case. The exception to its admission fell when the error was subsequently corrected by instructions too clear and positive to be misunderstood by the jury. The presumption should not be indulged that the jury were too ignorant to comprehend, or were too unmindful of their duty to respect, instructions as to matters peculiarly within the province of the court to determine. It should rather be, so far as this court is concerned, that the jury were influenced in their verdict only by legal evidence. Any other rule would make it necessary in every trial, where an error in the admission of proof is committed, of which error the court becomes aware before the final submission of the case to the jury, to suspend the trial, discharge the jury, and commence anew. A rule of practice leading to such results cannot meet with approval."

We think the action of the court, in refusing the motion for a new trial, and allowing the verdict to stand, upon the remittitur of $2,500 by the plaintiff, is not open to adverse criticism. An analysis of the verdict, convinced the court that the jury had disregared its instructions, in regard to the allowance of estimated profits that would have accrued to the plaintiff during the eight months the contract had to run, had not the same been wrongfully repudiated by the defendant. The basis for this allowance was the average profit per month made on the

Digitized by Google

engines manufactured and delivered under the contract. This was a sufficiently certain basis upon which the jury could assess damages which undoubtedly accrued to plaintiff, and must have been within the contemplation of the parties to the contract. Such profits are not remote or speculative, but are the direct fruit of the contract itself. U. S. v. Behan, 110 U. S. 339, 344, 4 Sup. Ct. 81, 28 L. Ed. 168; Howard v. Stillwell & Bierce Mfg. Co., 139 U. S. 199, 206, 11 Sup. Ct. 500, 35 L. Ed. 147; Anvil Mining Co. v. Humble, 153 U. S. 540, 549, 14 Sup. Ct. 876, 38 L. Ed. 814.

Where the court is convinced and is able to demonstrate that the verdict on the whole was a just one, and that certain instructions as to the measure of damages given by the court to the jury, and apparently disregarded by them, were erroneous, and that the verdict did not substantially exceed an amount that would have been just and right had proper instructions been given, it would be a sacrifice of justice for no good purpose to set aside such a verdict on the ground that the jury had disregarded the instructions of the court in rendering it.

But we are not required in this case to scrutinize the grounds upon which the judge below proceeded in refusing the motion for a new trial. Neither the verdict of the jury, nor the exercise by the trial judge of his discretion in refusing a new trial, are subject to review by this court, unless, in the latter case, that discretion has been abused. So far from having been abused in this case, we think that it has been properly exercised, and the judgment of the court below is therefore affirmed.

(130 Fed. 751.)

THIRD NAT. BANK OF CITY OF PHILADELPHIA v. ATLANTIC CITY et al.

(Circuit Court of Appeals, Third Circuit. June 21, 1904.)

No. 49.

1. EQUITABLE ASSIGNMENT—NOTICE—ACCEPTANCE OF ORDER.

A contractor for a city building, to whom money was due from the city, presented an order to the comptroller, requesting him to issue a warrant for a specified sum in favor of a bank, which order the comptroller, by an indorsement thereon, accepted, to be paid when the architect's certificate should be filed. The next day the contractor delivered the order to the bank, which advanced him money thereon. *Held*, that the accepted order, on its delivery, operated not merely as an equitable assignment of so much of the fund as was covered thereby, but as a transfer of the legal title thereto to the payee, creating a direct indebtedness from the city to the bank as of the date of the acceptance; that no further notice to the city than was involved in the presentation and acceptance of the order was required.

2. DECREE PRO CONFESSO—CONCLUSIVENESS—MATTERS CONCLUDED.

Where a bill to establish complainant's right to a fund which set out the grounds of such right, and alleged its priority was taken pro confesso as to certain defendants, and a decree rendered thereon as provided in equity rule 19, after the expiration of the term such decree became con-

Digitized by Google

clusive against the defendants in default as to any claim which might have been set up in answer to the bill, whether or not such claim was correctly recited therein.

Appeal from the Circuit Court of the United States for the District of New Jersey.

For opinion below, see 126 Fed. 413.

A. B. Repetto, for appellant.

John R. Embery, for appellee.

Before ACHESON, DALLAS, and GRAY, Circuit Judges.

ACHESON, Circuit Judge. This bill was brought by the Third National Bank of Philadelphia against the city of Atlantic City and others to enforce payment to the complainant of the sum of $7,500 out of a fund amounting to $18,692.72 in the hands of the city; the same being a balance due to M. P. Wells & Co. upon a contract for the erection of a city hall. The bank claims such payment under the following order and acceptance:

Order for Warrant

"Property Atlantic City, N. J., May 31, 1901.

A. M. Heston, City Comptroller,

Dear Sir:—Please issue a warrant for Seven thousand Five hundred Dollars to Third National Bank, Philada. and deduct the same from the amount of my Warrant for City Hall Contract, due

$7500.00 M. P. Wells & Co.

"Note.—The City Comptroller will not hold himself responsible for the payment of the above, unless the order is filed in this office at least five days before the date of Warrant."

Indorsed: "Accepted and to be paid from moneys due M. P. Wells & Co. on the filing of architects' certificate in this office. A. M. Heston "Comptroller."

This acceptance was written and signed by Mr. Heston, the comptroller of the city of Atlantic City, on the day of the date of the order.

The evidence shows that about May 28, 1901, M. P. Wells & Co. applied to the above-named bank for a loan, stating that money was due to them from the city of Atlantic City. They were told by the cashier of the bank to get a writing to that effect from the city comptroller, and a statement that he would accept an order for a certain amount. Accordingly M. P. Wells & Co. procured the acceptance of the foregoing order, and on June 1, 1901, delivered to the bank the order and acceptance as security for money they desired to borrow, and upon the faith thereof the bank loaned to M. P. Wells & Co. $5,000 on June 1, 1901, and subsequently $2,500 more.

This controversy is between the complainant and other creditors of M. P. Wells & Co., defendants in the bill, who respectively hold equitable assignments of portions of the said fund by virtue of orders drawn by M. P. Wells & Co. upon the city comptroller. The city itself has no interest in the distribution of the fund between the claimants.

The court below held that the bank acquired no interest in the fund by virtue of the acceptance of its order by the city comptroller, and its advancement of money upon the security thereof, and that its right to the fund did not attach until it gave notice of its claim to

Digitized by Google

the debtor, which was not until November 20, 1901, when the bank lodged its order with the city comptroller. The court therefore decreed that other claimants who had given notice to the comptroller prior to November 20, 1901, of their orders, were entitled to preference over the complainant.

The court ruled the case against the complainant upon the ground that where two assignments of a chose in action, for valuable consideration, are made to different persons, the assignee who first gives notice of his claim to the debtor has prior right. Laclede Bank v. Schuler, 120 U. S. 511, 516, 7 Sup. Ct. 644, 30 L. Ed. 704; Methven v. Staten Island Light, Heat & Power Co., 66 Fed. 113, 13 C. C. A. 362. But even upon that principle the conclusion of the court, we think, was wrong. The order of May 31, 1901, in favor of the Third National Bank of Philadelphia, was accepted on that day by the comptroller of the city of Atlantic City, who was the fiscal agent of the city, and clothed with the amplest powers touching all its fiscal concerns. The comptroller placed the accepted order in the hands of the drawers, creditors of the city, who the next day delivered it to the payee as security for a loan of money. M. P. Wells & Co. made such use of the accepted order as presumably was intended by the comptroller. The bank had a right to rely upon the acceptance of the comptroller, and when, on June 1st, it loaned to M. P. Wells & Co. $5,000 on the faith of the accepted order, the transaction was consummated and became irrevocable. The title of the bank to the accepted order and to the fund covered thereby was then complete, and related back to the date of the acceptance, May 31st. No further notice was necessary to perfect the bank's title. Notice was involved in the transaction. Moreover, the complainant does not stand upon a mere equity. The bank is not simply the holder of an order operating as an equitable assignment of the fund. The complainant holds, for value, an accepted order. The city became directly liable to the payee, the bank. The title of the complainant to the fund is grounded upon a legal right.

The assignments of error present for our determination another question, arising upon a decree in this cause entered against the Atlantic City National Bank, one of the defendants, under equity rule No. 19 of the Supreme Court of the United States, which provides that:

> "When the bill is taken pro confesso the court may proceed to a decree at any time after the expiration of thirty days from and after the entry of the order to take the bill pro confesso and such decree rendered shall be deemed absolute unless the court shall, at the same term, set aside the same or enlarge the time for filing the answer upon cause shown upon motion and affidavit of the defendant."

The Atlantic City National Bank was duly served with the subpœna on the 31st day of January, 1902, and, having failed to appear or plead, answer, or demur to the bill of complaint, an order was entered on the 12th day of April, 1902, that the bill be taken pro confesso against the Atlantic City National Bank and certain other defendants who were in default. On the 24th day of May, 1902, a de-

Digitized by Google

cree was entered against the Atlantic City National Bank and the other defendants included in the order pro confesso "that said defendants have not, nor has any of them, any right, title, claim, or interest whatever in or to that certain fund of $18,692.72 in said bill of complaint particularly mentioned; that the claim of the complainant thereto is good and valid and that the said defendants and each of them be, and they and each of them are, forever enjoined and restrained from asserting any claim whatsoever in or to said fund adverse to complainant." No application was made to the court during the term to set aside that decree, and it became absolute under the above-cited rule. Nevertheless the court below, in its decree of January 4, 1904, brought before us by this appeal, gave priority to the Atlantic City National Bank upon its order over the claim of the complainant. This was inadmissible. Thomson v. Wooster, 114 U. S. 104, 114, 5 Sup. Ct. 788, 793, 29 L. Ed. 105. In that case Mr. Justice Bradley, speaking for the court, said:

> "From the authorities cited, and the express language of our own rules in equity, it seems clear that the defendants, after the entry of the decree pro confesso, and whilst it stood unrevoked, were absolutely barred and precluded from alleging anything in derogation of or in opposition to the said decree, and that they are equally barred and precluded from questioning its correctness here on appeal, unless on the face of the bill it appears manifest that it was erroneous and improperly granted. The attempt on the hearing before the master to show that the reissued patent was for a different invention from that described in the original patent, or to show that there was such unreasonable delay in applying for it as to render it void, under the recent decisions of this court, was entirely inadmissible, because repugnant to the decree. The defendants could not be allowed to question the validity of the patent which the decree had declared valid."

Here the bill set out the order and acceptance of May 31, 1901, and expressly averred priority of right in the complainant by virtue thereof. The question of priority as between the complainant and the Atlantic City National Bank was thus directly involved, and it was expressly decided in favor of the complainant. It is true that the bill stated that the Atlantic City National Bank claimed to have a lien on the fund by virtue of a certain writ of foreign attachment, and did not mention an order in favor of this defendant bank. But if the bank had a defense grounded on an order, it was bound to set it up in answer to the bill. Stockton v. Ford, 18 How. 418, 15 L. Ed. 395; Aurora City v. West, 7 Wall. 82, 19 L. Ed. 42; Cromwell v. County of Sac, 94 U. S. 351, 352, 24 L. Ed. 195. In the latter case the rule as to the conclusiveness of a judgment, if rendered upon the merits, is thus stated:

> "It is a finality as to the claim or demand in controversy, concluding parties and those in privity with them, not only as to every matter which was offered and received to sustain or defeat the claim or demand, but as to any other admissible matter which might have been offered for that purpose."

A judgment by default is just as conclusive an adjudication between the parties of whatever is essential to support the judgment as when rendered after answer and contest. Last Chance Mining Company v. Tyler Mining Company, 157 U. S. 683, 691, 15 Sup. Ct. 733, 39 L. Ed. 859.

Digitized by Google

The decree of the Circuit Court is reversed, and the case is remanded to that court for further proceedings in accordance with the views expressed in the foregoing opinion.

(130 Fed. 755.)

CLARK v. LANGENBACH et al.

(Circuit Court of Appeals, Sixth Circuit. May 14, 1904.)

No. 1,273.

1. FORCIBLE ENTRY AND DETAINER—ACTION UNDER KENTUCKY STATUTE—ISSUES.

Under the Kentucky statute providing a summary proceeding to recover possession of lands from which plaintiff has been forcibly ousted, a lessee in an oil lease who was actually in possession for the purposes of his lease, under claim of right, when he was forcibly dispossessed by defendants, claiming under a subsequent lease, may recover his possession, although the owner and lessor was, in subordination to the lease, also in possession for general purposes, and regardless of the validity of his lease, the question of title not being an issue in such proceeding.

2. SAME—EVIDENCE.

In such an action plaintiff's lease was admissible in evidence for the purpose of showing the extent of his possession taken thereunder.

3. SAME—RIGHT TO REMEDY—RESISTANCE TO DISPOSSESSION.

Under such statute, which defines a forcible entry as "an entry without the consent of the person having the actual possession" (Civ. Code Ky. 1900, § 452), the person in possession is not required to resist dispossession by actual force, but is entitled to the remedy where he yields to threatened violence.

In Error to the Circuit Court of the United States for the Western District of Kentucky.

See 119 Fed. 349, 56 C. C. A. 253.

The court below gave to the jury the following charge:

"Gentlemen of the Jury: The first question submitted to you is this: When this action was brought, did the property sought to be recovered exceed in value the sum of two thousand dollars? If you believe from the preponderance of the evidence that the said property was then of the value only of two thousand dollars or less, you will return your verdict in this form: 'We of the jury find that the property sued for did not, when this action was brought, exceed in value the sum of two thousand dollars.' And if that is your verdict it will conclude your labors. I have so charged you because, unless the value of the property sued for then exceeded two thousand dollars, this court will have no jurisdiction to determine this case at all. But if you shall conclude from the evidence that the value of the property sued for did then exceed in amount the sum of two thousand dollars, then and in that event, but only in that event, the court instructs and charges you to find for the plaintiffs, and if you do find for the plaintiffs the form of your verdict can be simply: 'We of the jury find for the plaintiffs.'

"The reasons upon which the court charges you as last suggested may be thus stated: The lease to the plaintiffs was executed and delivered on May 22, 1900, and became effective from that time. Possession followed that lease as matter of law, at least so far as defendants were concerned. The rights conveyed by the lease covered the exclusive privilege to drill for minerals on the land for a period of 10 years, and of the existence and terms of the lease the defendants seem to have had notice when they entered. As both plaintiffs and defendants ultimately claim title under and from a common source,

Digitized by Google

all parties are estopped from denying or disputing the validity and sufficiency of the title to the land of W. H. Mann, and from that circumstance it must be presumed, for the purposes of this trial, that Mann's title to the land was good. Woolfolk v. Ashby, 2 Metc. (Ky.) 289; Winn v. Wilhite, 5 J. J. Marsh. 524; McClain v. Gregg, 2 A. K. Marsh. 456.

"I have stated in an opinion in writing, heretofore filed in the case, my views as to the proper construction of the terms of the plaintiffs' lease, and nothing has occurred to change the views then expressed. The lease by Mann to John A. Moore, A. C. Moore, and James & James, through whom the defendants claim, was made on September 2, 1901. The defendants' pleadings show conclusively, and the testimony is definite and positive, that the two leases covered the same tract of land; that it is located in the state of Kentucky, notwithstanding the word 'Ohio' in the plaintiffs' lease; and, speaking generally, both leases were for the mining and mineral privileges on that land. The defendants' pleadings manifest in the clearest way the immateriality of such use of the word 'Ohio,' and that it was regarded and treated by the defendants as immaterial. See, on this point, the very satisfactory language of the court in Smith v. Brown, 34 Mich. 459. It is too late to change that position now.

"It is contended on behalf of the defendants that the covenants of the plaintiffs' lease have not been performed by the lessees, and therefore that Mann had the right to lease to Moore & James, although Mann has not been heard to make any complaint of any breach of those covenants, nor any claim to a right to re-enter therefor. The court is of opinion that all questions as to the payment of rents, royalties, and penalties, and also all questions as to the performance of the covenants of the contract of lease between plaintiffs and W. H. Mann, are matters to which the defendants are strangers, and with which they have nothing to do. Those questions could properly arise only between the plaintiffs and the person with whom such covenants were stipulated. It is obvious that the defendants are not parties to any of those stipulations. These are matters which we speak of as 'res inter alios acta.' They are transactions between persons other than any of the defendants, and therefore are not available for them.

"The court is furthermore of opinion that the lease to the plaintiffs was not capable of being annulled merely by a subsequent lease from Mann to other persons without the consent of the plaintiffs, and there is no sufficient proof that the witness Cox had any authority, orally or otherwise, to consent to any surrender or release of plaintiffs' interests in or possession of the land. There was no evidence of any re-entry by Mann for breach of any condition subsequent in the lease to plaintiffs, and merely making a later lease to others was not equivalent in law to a re-entry. The court, moreover, is of opinion that there was no sufficient evidence to show that Mann either desired or had the right to re-enter. I think the defendants have not shown any right of entry as against the plaintiffs, and, if so, their entry was tortious.

"The lease from Mann to others, and their sublease to one or more of the defendants, seem to the court in no wise to afford an adequate shield or defense for either of them as against the prior and better rights acquired by the plaintiffs under the lease to them, and of which lease the defendants appear to have had notice. It seems to the court to be quite clear from the testimony of the defendants themselves that enough interference with the possession of the plaintiffs had occurred to justify the bringing of this action, and that, the priority of right being in the plaintiffs by virtue of the earlier lease to them, they are entitled as against the defendants to the possession of the mineral privileges covered by the lease to them. Mann's rights, if any, are in no way involved in this litigation. Both defendants, I believe, have testified that they took possession of the premises after the plaintiffs had done so under their lease, and the disseisin of the plaintiffs seems to have been accomplished by the acts of both of them.

"In consequence of these views, the court is of opinion that the plaintiffs are entitled to all of the relief they specifically claim in their petition, and the jury is directed to find a verdict for the plaintiffs. The court thinks that no reasonable construction of the evidence would permit any other verdict."

Digitized by Google

Campbell & Campbell and C. L. & H. E. Jewett, for plaintiff in error.

Greer & Reed, for defendants in error.

Before LURTON, SEVERENS, and RICHARDS, Circuit Judges.

SEVERENS, Circuit Judge. This case was here on a former occasion upon a question relating to the jurisdiction of the Circuit Court, and was remanded to that court for further proceedings. Roberts v. Langenbach, 119 Fed. 349, 56 C. C. A. 253. For a statement of the nature of the action, reference may be had to the opinion of this court there reported. It is sufficient now to say that the suit was brought under a statute of Kentucky providing a summary proceeding for the recovery of the possession of lands from which the plaintiff has been forcibly ousted. The title is not involved further than it may characterize the possession of the plaintiff. The petition elaborates with unnecessary fullness the origin of the rights of the respective parties, but the substance of it is that the plaintiff was in possession of the lands described under what is termed a "mineral and oil lease" from one W. H. Mann, granting the right to explore, dig, mine, and sink wells and operate the same for the purpose of obtaining and removing the minerals, oil, and gas which might be found, and the construction of the necessary buildings and pipe lines; for which purposes the lessees were "to have and to hold the said premises" for the term of 10 years from May 23, 1900, rendering to the lessor a certain proportion of the oil, and a specified price for the minerals which might be produced. The lessor reserved the right to use and enjoy the land for the purpose of tillage, but not so as to interfere with the rights granted by the lease. The petition also states that the lessees went into possession of the premises for the purposes specified in the lease; that the defendants, with knowledge of this lease, subsequently procured a lease of similar character from Mann, and forcibly entered upon and dispossessed the plaintiffs while so in possession under the former lease; and the prayer was that the possession be restored to the plaintiffs. The answer denied that the sum involved in the controversy amounted to as much as $2,000, and claimed that for that reason the court was without jurisdiction, but admitted the plaintiff's lease, claiming, however, that it had been forfeited; admitted the procurement of their own lease, but denying that the plaintiffs were in possession at the time stated in the petition, or that the defendants forcibly entered the said premises. The cause was tried by the court and a jury. Evidence was produced by the parties upon the question of the sum or value of the subject of the controversy, and also upon the question as to whether the plaintiffs had been forcibly dispossessed. The court, in its instructions, left to the jury the question as to whether the value of the matter in controversy amounted to the sum of $2,000, exclusive of interest and costs, and instructed them that, if they should find for the plaintiff upon the issue respecting the amount involved, they should render a verdict on the merits for the plaintiffs; but that if they should find for the defendant on the issue relating to the jurisdiction, they should render a general verdict for that party. The jury found a verdict for the plaintiff which

Digitized by Google

signifies that they found the issue relating to the jurisdiction for the plaintiff, and accepted the court's instruction that the evidence required a verdict for the plaintiffs on the merits, if they reached that question. A judgment for the plaintiffs having been entered, the defendants brought the case here on a writ of error. There are several assignments of error, but, as counsel have preferred to discuss the questions they desire to submit in a more general way than they are presented by the particular language of their assignments, we are content to follow their method.

1. It is contended that the lease to the plantiffs "was a mere option, which, not having been exercised, the owner of the land might treat as abandoned," the assumption being that the lease did not bind the lessees to do anything, and that they had not in fact done anything, under the lease. And on this contention counsel submit an argument fortified by reference to decided cases bearing on the construction of such leases. But we held in Allegheny Oil Co. v. Snyder, 106 Fed. 764, 45 C. C. A. 604, and Logan Natural Gas Co. v. Great Southern Gas Co., 126 Fed. 623,[1] that, notwithstanding there was no express covenant on the part of the lessee, there was an implied stipulation that he would within a reasonable time proceed with the exploration and development of the lands leased, and that, if he did not do so, the lessor might treat the lease as forfeited. But we need not pursue that subject. If the plaintiffs were actually in possession under a claim of right, that was enough. The defendants, whether they had the better right to the possession or not, could not lawfully acquire it by force. If they should venture on such a course, they would expose themselves to such a proceeding as this for the purpose of depriving them of the advantage gained by violence and replacing the parties. The question of title is not to be tried.

2. The lease to the plaintiffs was properly given in evidence for the purpose of showing the extent of the possession acquired by the plaintiff's entry upon the premises; that is to say, to show that the possession extended to the boundaries of the land described as granted by the lease.

3. It is contended also that the possession accorded by the lease was not such as would entitle one to have this statutory remedy. It is claimed that Mann was the party actually in possession, and, if their entry was unlawful, he alone could complain. This contention proceeds upon an erroneous assumption. If the plaintiffs entered under their lease, their possession was superior to that of Mann, for by its terms his possession was to be subordinate to the right of possession given to his lessees. The possession taken thereunder would, we think, be sufficient to protect the plaintiffs against a violent dispossession, and entitle them to the remedy provided by this statute.

4. From these conclusions the case is narrowed to the question whether the court was right in taking the view that the evidence left no fair room for doubt as to whether the defendants intruded upon the possession of the plaintiffs by violence. The proof was that the agents of the plaintiffs had, for several days before the difficulty occurred, been digging and prospecting upon the land, and were upon it at the time when the defendants' party entered, and protested against the

[1] 61 C. C. A. 359.

Digitized by Google

entry of the defendants. High words followed. The defendants persisted, and threatened violence to gain their point. No blows were struck, but they were threatened. Calmer counsels, however, prevailed. The plaintiffs' agents gave way, asserting that legal steps would be taken to obtain a remedy. There were some disputes in the evidence in respect to the minor particulars of the transaction. But there was none as to the substantial facts that the defendants entered with a show of force, and that the plaintiffs opposed it as far as they could without engaging in a combat. They were not required to go to that extremity in order to lay the ground for complaint under the statute. The object of the law was to prevent strife, and it would be inconsistent with its purpose to require that the injured party should have resisted to the point of a physical struggle. The statute defines a forcible entry as "an entry without the consent of the person having the actual possession." Civ. Code Ky. 1900, § 452. Upon that interpretation of the law a verdict finding that the defendants' entry was not forcible would have been absurd. We think the court did not err in holding that a forcible entry was proved beyond fair doubt.

There are no other questions of sufficient importance to require separate discussion.

The judgment must be affirmed, with costs.

(130 Fed. 759.)

WHITMAN v. ATKINSON.

(Circuit Court of Appeals, Second Circuit. April 26, 1904.)

No. 140.

1. FEDERAL COURTS—STATUTORY LIABILITY—RULES OF DECISION.

Where a cause of action is created by a state statute, the question when the right of action accrues, and what conditions authorize its enforcement, is one of judicial construction, as to which the decisions of the highest court of the state are controlling on the federal courts.

2. CORPORATIONS—INSOLVENCY — STOCKHOLDERS' LIABILITY — STATUTES—CONSTRUCTION—LIMITATIONS.

Kan. Gen. St. 1889, c. 23, § 32, provides that, after an execution has been issued against a corporation and returned nulla bona, an execution may be issued on an order of court against stockholders to an extent equal in amount to the amount of his stock, or plaintiff in the execution may proceed by action to charge the stockholder with the amount of his judgment. Section 44 provides that if such corporation be dissolved, leaving debts unpaid, suits may be brought against stockholders at the time of the dissolution, and by another section the corporation is declared dissolved for such purposes when it has suspended business for more than a year. Under the decisions of the state courts, a creditor of a moneyed corporation may proceed by action to enforce the stockholder's liability under section 44 immediately after the expiration of a year from the date of suspension of business without recovering judgment against the corporation, the right being complete on the corporation's dissolution. *Held*, that a creditor was not entitled to delay suit against a stockholder under section 44 while he was maintaining a suit against the corporation under sec-

---

¶ 1. State laws as rules of decision in federal courts, see notes to Griffin v. Overman Wheel Co., 9 C. C. A. 548; Wilson v. Perrin, 11 C. C. A. 71; Hill v. Hite, 29 C. C. A. 553.

Digitized by Google

tion 32, and obtaining the return of executions unsatisfied, and hence the maintenance of such proceedings did not suspend the statute of limitations against an action against stockholders under section 44.

In Error to the Circuit Court of the United States for the Southern District of New York.

William G. Wilson, for plaintiff in error.
William B. Hornblower, for defendant in error.

Before WALLACE, LACOMBE, and TOWNSEND, Circuit Judges.

WALLACE, Circuit Judge. This is a writ of error by the defendant in the court below to review a judgment for the plaintiff. The action was tried by the court below without a jury, a jury having been waived by the stipulation of the parties, and the judgment rests upon the findings of fact and law made by the court, which cover all the questions litigated in the case.

The action was brought in the United States Circuit Court for the Southern District of New York to enforce the statutory liability of the defendant, under the laws of Kansas, as a stockholder of the Arkansas City Investment Company, a moneyed corporation of that state, for certain debts of that company. The plaintiff is a judgment creditor of that corporation, and is also the assignee of the debts and judgments of two other creditors against the corporation. The judgments against the corporation were recovered respectively in 1893, 1894, and 1895, in actions brought in one of the state courts of Kansas after the debts of the plaintiff and his assignors had severally accrued. Executions were issued upon these judgments in September, 1897, and were returned unsatisfied on November 20, 1897. The present action was commenced April 1, 1898. The Arkansas City Investment Company made an assignment for the benefit of its creditors December 15, 1890, and thereupon completely suspended business, and has never resumed.

Among the defenses interposed is that of the New York statute of limitations, which requires an action against a stockholder of a moneyed corporation to be brought within three years after the cause of action has accrued. The ruling of the trial judge that this statute was not a good defense is the basis for some of the assignments of error.

The statutes of Kansas creating the liability of stockholders for the debts of Kansas corporations are found in the Kansas General Statutes of 1889, c. 23. By section 32 it is provided that after an execution has been instituted against a corporation (except a railway, religious, or charitable corporation), and there cannot be found any property whereon to levy such execution, an execution may be issued upon an order of the court made in the action, upon reasonable notice to the stockholder against any of the stockholders, to an extent equal in amount to the amount of his stock; or the plaintiff in the execution may proceed by action to charge the stockholder with the amount of his judgment. Section 44 provides that if such a corporation be dissolved, leaving debts unpaid, suits may be brought against any person or persons who were stockholders at the time of the dissolution, without joining the corporation. By another section it is provided that a cor-

Digitized by Google

poration is dissolved, for the purpose of enabling any creditor to prosecute suits against the stockholders thereof to enforce their individual liability, if it be shown that such corporation has suspended business for more than a year.

If the plaintiff's cause of action accrued at the date of the dissolution of the corporation, the three-years statute of limitations is a bar, as it has been decided by this court, and by the Supreme Court, that the statute pleaded applies to such a cause of action as is alleged in the complaint. Hobbs v. National Bank of Commerce, 96 Fed. 396, 37 C. C. A. 513; Platt v. Wilmot (Sup. Ct. April 4, 1904) 24 Sup. Ct. 542, 48 L. Ed. 809.

It is not disputed that the corporation became dissolved, within the meaning of section 44, on December 16, 1890; but the contention for the defendant in error is that the cause of action did not accrue in respect to the several debts until the recovery of the judgments thereon, and the return of the executions unsatisfied.

When a cause of action is created by statute, the question when the right of action is brought into existence, and what conditions authorize its enforcement, is one of judicial construction, and, upon all questions concerning the interpretation and construction of the statute of a state, the decisions of the highest court of that state are authoritative and controlling. The interpretation becomes a part of the law of that state, as much so as if incorporated into the body by the Legislature. Christy v. Pridgeon, 4 Wall. 196, 18 L. Ed. 322.

By the decisions of the highest courts of Kansas construing the statutory provisions which have been referred to, a creditor of a moneyed corporation may proceed by action to enforce the liability of its stockholders under section 44 immediately after the expiration of a year from the date of its suspension of business, without awaiting the recovery of a judgment against the corporation, and the right of action is complete the moment the corporation is dissolved. According to the view of these decisions, section 32 relates to the exigency of corporate insolvency, and section 44 to that of corporate dissolution; under the one the action against the stockholder lies because the corporation is bankrupt, though not necessarily dissolved; under the other it lies because the corporation is dissolved, though not necessarily bankrupt.

In Cottrell v. Manlove, 58 Kan. 405, 49 Pac. 519, the court say:

"The remedy of the section last quoted (44) is open to the creditors immediately upon the dissolution of the corporation. Under its provisions there is no occasion to await the recovery of a judgment against the company, but action may at once be brought against its stockholders. * * * Indebtedness maturing after the dissolution, and growing out of a contingent liability existing at the time of such dissolution, is, in our judgment, within the intent of the act. The controlling factors in the problem which arises under this statute are the facts of indebtedness and corporate dissolution, and not the time of their occurrence."

In First National Bank of Atchison v. King, 60 Kan. 733, 57 Pac. 952, it was held, in substance, that the right of action in favor of the creditors of the corporation, as against stockholders, accrues at the expiration of one year after the corporation has ceased to transact

Digitized by Google

business, and not after such suspension of business has been shown or determined in some judicial proceeding.

In Brigham v. Nathan, 62 Kan. 243, 62 Pac. 319, it was held that the creditor, notwithstanding the immaturity of his demand against the corporation, had an immediate right of action against the stockholder when the corporation had ceased for one year to transact all business for which it was organized, and in the meantime had confined itself to the doing of such acts as were incidental and necessary to the final closing up of its affairs.

These decisions, as well as those in Crocker v. Ball (Kan.) 59 Pac. 691, Remington v. Hudson, 64 Kan. 45, 67 Pac. 636, and McHale v. Moore (Kan.) 71 Pac. 522, clearly establish the proposition that the plaintiff might have maintained the present action against the defendant at any time after the 16th day of December, 1891. The construction of the statute placed upon it by the courts of Kansas seems to be the reasonable, and, indeed, the necessary one; but, if we were disposed to differ from the courts of Kansas, nevertheless we are concluded by it, because the decisions of the highest court of a state in the construction of its own statutes are controlling upon the federal courts.

In Seattle National Bank v. Pratt (C. C.) 103 Fed. 62, it was held by the United States Circuit Court for the Northern District of New York that the decisions which have been referred to were in construction of sections 32 and 44 of the corporation law of Kansas, and as such were binding upon the federal courts. This court affirmed that decision. 111 Fed. 841, 49 C. C. A. 662.

In Hilliker v. Hale, 117 Fed. 220, 54 C. C. A. 252, in an action to enforce the liability of a stockholder of a Minnesota corporation, this court held that the question when the cause of action against the stockholder arose was controlled by the decisions of the court of that state in construction of its statutes relating to the liability of stockholders of corporations, and the court said:

> "In courts outside of Minnesota, there is conflict as to when such cause of action arose; but we are of opinion that such question should be decided in conformity with the decision of the Minnesota courts, and they speak with no uncertain sound."

So far as the decision in Whitman v. Citizens' Bank, 110 Fed. 504, 49 C. C. A. 122, is in conflict with these decisions, it does not meet with our approval.

If the present action could have been brought to enforce the liability of the defendant immediately after the dissolution of the corporation, the bar of the statute cannot be parried by the election of the creditors to bring actions against the corporation pursuant to section 32, prosecute them to judgment, issue executions, and await the return of the executions unsatisfied.

> "When a party knows that he has a cause of action, it is his own fault if he does not avail himself of those means which the law provides of prosecuting his claim, instituting such proceeding as the law regards sufficient to preserve it." Amy v. Watertown, 130 U. S. 320, 325, 9 Sup. Ct. 537, 32 L. Ed. 953.

In Bauserman v. Blunt, 147 U. S. 657, 13 Sup. Ct. 466, 37 L. Ed. 316, the court mentioned two general rules to be observed in apply-

Digitized by Google

ing statutes of limitation, in the absence of an express statute or controlling adjudication of the contract. The second rule was this:

"The bar of the statute cannot be postponed by the failure of the creditor to avail himself of any means within his power to prosecute or to preserve his claim."

It is entirely clear that the maintenance of the present action does not depend upon the issuance or return of executions under section 32, and that the plaintiff would be entitled to recover under section 44 if his action had been brought within three years from the date of the dissolution of the corporation.

It is impossible to escape the conclusion that the statute of limitations was a perfect bar to the action, and that the court below erred in failing to give it such effect.

Judgment should have been rendered for the defendant, and accordingly the judgment will be reversed, with instructions to render such a judgment.

(130 Fed. 763.)

BURRILL et al. v. CROSSMAN et al.

(Circuit Court of Appeals, Second Circuit. April 13, 1904.)

No. 194.

1. SHIPPING—DEMURRAGE—DEFENSE OF VIS MAJOR.

Where a vessel commenced discharging cargo in Rio de Janeiro on the day that the revolution began there in 1893, in which the insurgents captured government warships in the harbor, and there was thereafter more or less firing between such ships and forts and batteries on shore, and such a condition of affairs was produced by the hostilities as to render it practically impossible to receive the cargo with the dispatch contemplated by the charter, either because of the intrinsic danger incident to unloading or the inability to procure the necessary men to do the work, such condition constituted an unavoidable hindrance, and, to the extent that it prevented compliance with the contract, excused performance, and relieved the charterers from liability under the provision requiring them to pay demurrage for detention by the default of themselves or their agent.

Appeal from the District Court of the United States for the Southern District of New York.

For opinions below, see 111 Fed. 192, and 124 Fed. 838.

Everett P. Wheeler, for appellants.

Lawrence Kneeland, for appellees.

Before WALLACE, LACOMBE, and COXE, Circuit Judges.

WALLACE, Circuit Judge. This is an action for demurrage, the libelants claiming that the charterers are liable for the detention of the chartered vessel at the port of Rio de Janeiro during the time of the revolution of 1893.

By the terms of the charter party the cargo of lumber was to be discharged at the port of destination at the average rate of not less

¶ 1. Damages, see notes to Harrison v. Smith, 14 C. C. A. 657; Randall v. Sprague, 21 C. C. A. 337; City of Laredo v. International Bridge & Tramway Co., 16 C. C. A. 4.

Digitized by Google

than 20,000 superficial feet per running day, Sundays excepted. Lay days were to commence from the time the vessel was ready to discharge and gave written notice thereof to the consignees; and for each and every day's detention by default of the charterers $59.46 was to be paid. The vessel arrived at Rio de Janeiro prior to September 4th, and upon that day was ready to discharge, and gave due notice to the consignees, and, having been ordered to her discharging berth, on September 6th commenced to discharge. She had on board 514,000 feet of lumber, and, discharging at the rate of 20,000 feet per day, Sundays excepted, the lay days would have expired October 6th. Her discharge was not completed until November 28th.

The defense of the charterers is that, owing to the existence of the hostilities between the rebels and the government, the consignees were directly or indirectly prevented from doing more than they did to take the cargo. It appears by the proofs that the revolution began September 6th. The insurgents captured the warships of the government lying in the harbor, and the officers and crews of the seized ships went over to the rebels. From that time on the revolted squadron controlled the inner harbor to within a limited distance of the shore line, which was defended by barricades and intrenchments, and with artillery, infantry, and police forces; and there was firing intermittently between the vessels and the forts at the entrance of the harbor and the fortified hills in the city, and occasional fighting in the bay and along the shore. At times the rebel squadron bombarded the city, and at times fired with machine guns and small arms at the troops upon the shore. All this created a condition of fear, suspense, and panic on the part of the population, which resulted in a partial paralysis of business within the city. Foreign commerce was practically suspended. The practice of the government, in impressing the gangs of workingmen employed around the harbor or in the streets into the military service, deterred laborers from accepting employment. The effect of this state of affairs upon the discharging of vessels is fairly characterized in a letter written November 17th to the libelants by their agents in Rio:

"It is, we understand, most difficult to get labor, and many vessels are lying for weeks unable to discharge for want of men. We fear Capt. Wilson will not be able to collect any demurrage in these times, but have told him that he should look to the consignees to make the claim on the owners of the cargo."

By the decree of the court below the libelants were awarded the per diem rate for the whole period of detention between October 6th and November 28th. The court was of the opinion that the indirect effect of such a state of affairs as was shown by the proofs was not to be considered, and that the inquiry was to be confined "to the result of the firing in the vicinity of this vessel which directly affected the discharge of the cargo."

When this cause was considered by the Supreme Court (179 U. S. 100, 21 Sup. Ct. 38, 45 L. Ed. 106), it was presented, as to the questions now involved, upon the pleadings, and this question was whether, upon the facts alleged in the answer, the detention of the vessel was caused by default of the charterers or by the acts of the

Digitized by Google

public enemy. It was not necessary to decide whether, upon the facts now in proof, the charterers were answerable, and the opinion was confined strictly to the point involved. We do not read the opinion of the court as intending to decide that such a condition of affairs at the port of discharge, caused by military hostilities, as would prevent the consignees from obtaining men to engage in unloading the vessel, would not excuse them; and we think the court below fell into error by adhering too literally to some of the expressions in the opinion. One of the cases cited with approval in the opinion of the court is Towle v. Kettell, 5 Cush. 18. In that case the vessel, after reaching her anchorage place for the discharge of her cargo, was ordered into quarantine and moved from the place. The court said:

"The consignees were not bound to receive the cargo under the disadvantages and at the increased expense arising from the remote situation of the vessel. As soon as the vessel was restored to her original place of anchorage, the discharging of the cargo commenced, and proceeded, so far as appears, with all reasonable dispatch."

It was held, inasmuch as the demurrage was recoverable only for the "default" of the defendants, that there was no breach of the charter party, notwithstanding they could have taken the cargo from the place to which the vessel had been removed at some additional expense.

Another of the adjudged cases cited in the opinion of the court was Davis v. Pendergast, 16 Blatchf. 565, Fed. Cas. No. 3,647. By the terms of the charter demurrage was to be paid for every day of detention "by default" of the charterers, and the court placed this construction upon the meaning of the contract:

"The respondents in effect agreed that no more than 45 running days should be occupied in loading and discharging the cargo, unless it was occasioned by some fault of the vessel, or some unusual and extraordinary interruption that could not have been anticipated when the contract was made."

We are of the opinion that if there was such a condition of affairs produced by the hostilities as to render it practically impossible to receive the cargo with the dispatch contemplated by the charter, either because of the intrinsic danger incident to unloading, or the inability to procure the necessary men to do the work, such a condition constituted an unavoidable hindrance, and, to the extent that it prevented compliance with the contract, excused performance.

It is quite impossible to find upon the proofs that the consignees did not receive the cargo as rapidly as was reasonably practicable under the circumstances. Some of their witnesses, no doubt, gave a very highly colored picture of the hostilities; but that the hostilities interfered very seriously with the unlading of the vessels in the harbor, and with this particular vessel, directly or indirectly, it is impossible to doubt. The fact that the consignees took cargo from the vessel on quite a number of days when active hostilities had previously taken place, or took place later in the day, some of them in the immediate vicinity of the vessel, indicates that they were trying to do what lay in their power to facilitate the discharge. The further fact that the libelants, who were doubtless kept informed of the sit-

Digitized by Google

uation by Capt. Wilson, were during the period of detention instructing their agents to make claim upon the government of Brazil for the delay and attendant expenses, shows that they regarded the government as responsible for it, and did not attribute it to the consignees.

We conclude that the libelants have failed to establish such a default on the part of the charterers as entitles them to a recovery for the detention.

The decree is reversed with costs, and with instructions to dismiss the libel.

(130 Fed. 766.)

FRYE & BRUHN v. CARSTENS et al.

(Circuit Court of Appeals, Ninth Circuit. May 2, 1904.)

No. 1,026.

1. APPEAL—INTERLOCUTORY JUDGMENT—TEMPORARY INJUNCTION—DISSOLUTION.
Act March 3, 1891, § 7, as amended by Act June 6, 1900, c. 803, 31 Stat. 660 [U. S. Comp. St. 1901, p. 551], provides that where, on a hearing in equity in a district or circuit court, an injunction shall be granted or continued by an interlocutory order or decree in a case in which an appeal from a final decree may be taken to the Circuit Court of Appeals, an appeal may be taken from such interlocutory order or decree granting or continuing such injunction to the Circuit Court of Appeals. *Held*, that, where a temporary injunction was dissolved on a demurrer to the bill being sustained, plaintiff was not entitled to an appeal from so much of the order only as dissolved the injunction.

Appeal from the Circuit Court of the United States for the Western Division of the District of Washington.

James M. Ashton, for appellant.

R. G. Hudson and R. S. Holt, for appellees.

Before GILBERT and ROSS, Circuit Judges, and HAWLEY, District Judge.

ROSS, Circuit Judge. The motion made to dismiss the appeal in this cause must be granted. To the bill filed by the complainant the defendants demurred, upon the ground that upon its face it failed to show that the complainant was entitled to the relief sought. Among the relief so sought was a restraining order and injunction, and upon the bill a restraining order was granted by the court, a motion to dissolve which was afterwards made by the defendants, and came on for hearing before the court with the demurrer to the bill, and resulted in this order of the court:

"The demurrer to the bill and motion of defendants to dissolve the restraining order herein coming on for hearing in open court on this 23d day of September, 1903, and the court having heard read the said bill and demurrer, with the record and files herein, and having heard the arguments of counsel for all parties:

"It is ordered and decreed that the said demurrer be, and the same is hereby, sustained, whereupon plaintiff upon its motion therefor was granted leave to file an amended bill of complaint herein, and at the request of its counsel was allowed thirty days from this date so to do; and, plaintiff having thereupon given notice of appeal from said decision to the United States Circuit

Digitized by Google

Court of Appeals for the Ninth Circuit in so far as the same might operate to dissolve said restraining order or injunction, the court did order and direct that said restraining order continue in force, and that all proceedings thereon pending said appeal be stayed, upon the plaintiff filing an additional bond on appeal in the sum of fifteen hundred dollars."

The appellant's petition for appeal, which was allowed by the court below, is as follows:

"The above-named plaintiff conceiving itself aggrieved by the interlocutory order made and entered herein by the above-entitled court on the 23d day of September, 1903, whereby said court declined to continue the restraining order herein in force, and permitted the same to stand as a temporary injunction pending the determination of this appeal, only upon this plaintiff giving an additional bond herein on appeal in the sum of fifteen hundred dollars, and requiring that said additional bond be given as a condition of said appeal, and as a condition for the order of said court staying proceedings under said injunction or temporary restraining order during the pendency of said appeal, and this plaintiff having on said 23d day of September, 1903, in open court, given notice of an appeal from said interlocutory order:

"Now, therefore, said plaintiff does hereby appeal from said order to the United States Circuit Court of Appeals for the Ninth Circuit, and for the reasons specified in the assignment of errors filed herewith; and the plaintiff hereby prays that this its said appeal may be allowed, and that a transcript of the record, proceedings, and all papers upon which said interlocutory order was made may be sent, duly authenticated, to the United States Circuit Court of Appeals for the Ninth Circuit at San Francisco, California."

The appeal must be dismissed, because the sustaining of the demurrer to the bill upon the ground that it did not state sufficient facts to warrant the relief sought necessarily resulted in a dissolution of the restraining order, which could not stand while that upon which it was based fell. The complainant had the right, of course, to stand upon its demurrer, submit to final judgment against it, and bring the case here for review, or to avail itself of the privilege given by the court below to amend its bill, which it seems it did. The only appeal the plaintiff sought to take was from so much of the order made by the court below as undertook to work a dissolution of the restraining order, which, under the statute as it now exists, is not appealable, section 7 of the act of March 3, 1891, c. 517, 26 Stat. 828, establishing the Circuit Courts of Appeals, having been amended by the act of June 6, 1900, c. 803, 31 Stat. 660 [U. S. Comp. St. 1901, p. 551], so as to read as follows:

"Sec. 7. That where, upon a hearing in equity in a District Court or in a Circuit Court, or by a judge thereof in vacation, an injunction shall be granted or continued or a receiver appointed, by an interlocutory order or decree, in a cause in which an appeal from a final decree may be taken under the provisions of this act to the Circuit Court of Appeals, an appeal may be taken from such interlocutory order or decree granting or continuing such injunction or appointing such receiver to the Circuit Court of Appeals; provided, that the appeal must be taken within thirty days from the entry of such order or decree, and it shall take precedence in the appellate court; and the proceedings in other respects in the court below shall not be stayed, unless otherwise ordered by that court, or by the appellate court or a judge thereof, during the pendency of such appeal: provided further, that the court below may in its discretion require as a condition of the appeal an additional bond."

The appeal is dismissed.

Digitized by Google

(130 Fed. 886.)

LOWRIE v. H. A. MELDRUM CO.

(Circuit Court of Appeals, Second Circuit. April 25, 1904.)

No. 154.

1. PATENTS—INFRINGEMENT—GARMENT FASTENER.

The Steel patent, No. 652,407, for a garment fastener, designed to hold down the skirt band and belt so as to give the waist a downward curve in front, and which, as described, consists of a combination of hooks to hold the band and belt, with a shank fitted to be attached to the fastening devices of a corset, was not anticipated, and discloses invention. but is not infringed by a device otherwise similar, but which is fastened to the fabric of the corset by means of a safety pin; such device being substantially shown in the prior art.

Appeal from the Circuit Court of the United States for the Western District of New York.

This cause comes here on appeal from a decree adjudicating the validity and infringement by defendant of patent No. 652,407, granted June 26, 1900, to Anna M. Steel for a garment fastener. For opinion below, see 124 Fed. 761.

Harry C. Kennedy and Horace Pettitt, for appellant.

F. F. Church, for appellee.

Before WALLACE, LACOMBE, and TOWNSEND, Circuit Judges.

TOWNSEND, Circuit Judge. The record shows that for some years prior to the date of the patent in suit a host of would-be inventors had been directing their efforts toward the production of a practicable device for firmly fastening garments together at the waist. The earlier devices were generally designed chiefly to support the lower garment. Later such devices were also adapted to depress alike the upper and lower garments so as to give the required shape. The patentee herein appears to have constructed a device superior to those which had preceded it, and one which has achieved great commercial success. It is "adapted for the purpose of holding down the front of the skirt and the belt of women's garments; it having for its objects to prevent the skirt from 'hiking,' and also to produce a downward curve or slope of the skirt band and belt toward the front." It consists "essentially of a garment fastener composed of a shank provided with means for its attachment to the fastening devices of the corset, and provided at its upper end with hooks located in position to engage with the upper edge of the skirt band, and with hooks located above the plane of the first hooks, and adapted to engage with the upper edge of the belt."

The claims in suit are the following:

"(1) A garment fastener provided with means for its attachment to the fastening devices of a corset, and with two outwardly and downwardly extending hooks, each in a different plane, the one being adapted to engage with the upper edge of the skirt band, and the other with the upper edge of the belt, substantially as described."

"(3) A garment fastener comprising a shank having means for its attachment to a corset, and provided with a row of outwardly and downwardly extending hooks, projecting from lateral extensions on said shank, and with a second

Digitized by Google

row of outwardly and downwardly extending hooks in a different plane from that of the first row, substantially as and for the purpose specified."

The elements of this combination were old. Shanks provided with means, etc., said means being specifically described as "a series of longitudinal slots or other suitable sockets for the purpose of adapting the shank to be attached to one of the usual fastening studs in corsets," were shown in prior patents to Towson and Carr & Wolf, and on reference to the latter patent a claim by this patentee for such means was rejected in the Patent Office. Hooks in different planes for engaging respectively the belt and shirt waist were shown and described in the Dunbar patent of 1899. And Sanders, in his patent of 1899, had shown and described a device to keep men's belts in place, which comprised a combination of elongated shank, and means capable of attachment to a woman's corset or corset clasp, with hooks in different places at the upper end of the shank, adapted to keep a skirt band and belt in position. But when, at the close of the nineteenth century, the decrees of fashion transformed the circular waist of nature, characteristic of that period, into the conventional downwardly curved slope in front, in the similitude of a girdle, or the pointed waist of the Elizabethan period, a new problem was presented to the designers of garment clasps. They must no longer fasten and support the garments at the waist line of nature, and in a natural position. They must now force the meeting edges of skirt band and belt, and incidentally of the shirt waist, down below the true waist, and "draw and hold the front of the skirt downward" by an attachment so firmly fastened as to be adapted to the anatomy of a woman having a prominent abdomen, and to prevent the skirt and belt from rising above it. The patentee herein met the exigencies of the situation by providing in compact form a combination of the old devices, but now adapted to grip with the corset stud, and to engage the meeting garments and hold them down in suitable relative positions. It appears that in so doing she exercised in a humble way, and to a limited extent, the faculty of invention. She certainly succeeded in producing a practical fastener, superior to all the devices of the prior art. We conclude that the claims in suit of her patent are valid, so far as they cover the precise device "substantially as described."

The defendant has attempted to meet the demands of the new fashion by providing a fastener which should be so within the disclosures of the prior art, and without the limitations of the patented fastener, as not to infringe. It has constructed a shank provided with the outwardly and downwardly extending hooks, in different planes, of the patent in suit. But it has not provided any means for attachment to the fastening devices or stud of the corset. Instead, it has equipped the lower end of the shank with an ordinary safety pin, for the purpose of fastening the device to the fabric of the corset, and adapted to engage only with such fabric. That this safety pin is not "a means for attachment to the fastening devices of a corset" is proved by the admission of complainant's witness Mrs. Holch, a dealer in such articles, that she has seen a great many of defendant's devices in use; that all of them which she has seen have been pinned to the fabric of the corset and skirts; that, while it would be possible to engage the

Digitized by Google

corset stud with the safety pin, pinning through the fabric is the quickest way, by the self-evident fact that such fastening would not be firm, stable, or sufficiently strong, if accomplished by engagement of safety pin and stud, and finally by the fact that such engagement would not be practicable, because the long distance between the corset studs would preclude the possibility of practical adjustment. The sole question, then, is as to infringement of the third claim by broadening the same so as to include a safety pin, as the equivalent of the "means for attachment to a corset * * * substantially as described." But the effect of thus broadening said claim is to raise the question of patentable novelty, in view of design patent No. 25,795, granted in 1896 to E. B. Bunnell for a "garment supporting buckle or pin such as may be used to retain in place a lady's shirt waist, skirt, and belt." The specifications describe and the drawings show a body portion or plate provided with an upper hook and two arms extending downwardly from its ends; said arms consisting of spring clasps, the lower portions of which are adapted to grasp and hold down a shirt waist in place. If the spring be omitted, the sole function of the clasps would be that of downwardly extending hooks to keep the skirt from rising up, and to produce a downward curve of said band. The center of the plate is provided with a safety pin for attachment to the fabric of the corset or other garment. The single material difference between this fastener and that of defendant is that in the latter the band is lengthened, and the safety pin is at the lower end instead of in the center of the band. But this change is a mere mechanical adaptation to the later requirement of fashion, that the skirt band should be kept down, instead of held up, as formerly. In view of this complete disclosure of the means employed by defendant, the scope of the third claim cannot be enlarged to cover defendant's device without destroying its validity. The admissions of complainant's expert as to the Bunnell patent confirm this view. The argument of complainant's counsel that Bunnell does not anticipate, because the statement of functions in the specifications is not a proper subject for consideration, is immaterial, because such statement, in connection with the drawings, constitutes a complete disclosure of defendant's construction in a printed publication prior to the patent in suit.

The decree of the court below is reversed, with costs of this court, and the cause is remanded to the Circuit Court, with instructions to enter a decree in accordance with the foregoing opinion.

(130 Fed. 888.)

SPENCER ELEVATOR SAFETY GUARD CO. v. BEIFELD et al.

(Circuit Court of Appeals, Seventh Circuit. April 26, 1904.)

No. 1,068.

1. PATENTS—INVENTION—ELEVATOR GUARDS.

The Spencer patent, No. 648,309, for an elevator guard, consisting of a board or riser extending downward from the doorsill of an elevator from 12 to 18 inches, to prevent the feet of persons entering from being caught between the bottom of the elevator and the floor, is void for lack of patentable invention.

Digitized by Google

Appeal from the Circuit Court of the United States for the Northern Division of the Northern District of Illinois.

In Equity. Suit for infringement of letters patent No. 648,309, for an elevator guard, granted to William W. C. Spencer April 24, 1900.

The following is the opinion of the Circuit Court (Kohlsaat, District Judge):

This bill was filed to enjoin defendants from infringing letters patent No. 648,309, for improvements in elevator guards, granted April 24, 1900. It charges defendants with unlawfully using complainant's device. In this patent there are two claims, both of which are sued on, and which are as follows:

"(1) An elevator in combination with a guard having a flat exposed surface extending vertically downward from the doorsill, and at right angles to the floor of the elevator, as and for the purposes set forth.

"(2) In combination an elevator, tread, and guard, said tread being adapted to be attached to the floor of the elevator upon substantially the level thereof, and said guard being adapted to extend downward vertically therefrom in a plane at substantially right angles thereto, and, when the elevator has descended nearly to a level with the floor of the building, to afford a flat, vertical protecting surface to any object projecting from the floor surrounding the elevator well, as set forth."

Spencer describes his invention as follows:

"When a passenger elevator reaches a landing, the door is often opened to admit passengers while the attendant is still attempting to bring the elevator to the exact level of the floor. In such case, if the elevator is raised slightly above the floor—say two or three inches—a person anxious to get into the elevator can step forward in such a manner that a part of his foot will overhang the edge of the floor and come under the elevator. If the attendant, not seeing this, attempts to lower the elevator, the person's foot may be seriously injured by being jammed between the elevator and the floor. * * *

"My invention is intended to guard against such an accident. For this purpose I provide a guard or riser extending downward from the sill below the floor of the elevator a sufficient distance—say from twelve to eighteen inches—and flush with the front of the sill.

"In operation, if the attendant stops the elevator at any point within, say, eighteen inches above the floor of the building, and opens the door, it is impossible for the would-be passenger to get his foot under the elevator for the reason that his toes will strike the guard, and, as the elevator settles to the level of the floor of the building, the guard will simply grind against the toe of his shoe."

The defenses relied upon by the defendants are (1) that the patent is void for want of patentable novelty; (2) that the subject-matter thereof had been invented or used by others prior to the date of the invention or discovery thereof by the patentee; and (3) that there is no infringement. The sketch made of defendants' elevator guard, in the joint record, clearly indicates that, if complainant's patent is valid, defendants infringe. This disposes of the last-named of the three defenses relied on by the defendants, and, as to the other two, I will consider the second one first.

The only prior patent introduced in behalf of defendants was that of C. M. Dalsen, No. 167,993, for improvement in hatchways, which does not, in my judgment, anticipate the patent.

The evidence, which is very meager, makes no attempt to show prior use. It only remains to consider the question of want of patentable novelty and utility. So far as the record discloses, defendants are the only users, notwithstanding the patent is three years old. Generally speaking, defendants would not be permitted to urge this fact as a defense, but, in determining this question of utility, the court should consider it. Neither does it appear from the record that the danger sought to be provided against by the device of the patent is a real danger, nor that any person was ever injured for want of such a device.

Digitized by Google

The court cannot assume that people will thrust their feet under the elevator, nor that the elevator conductor will be so negligent as to open the elevator shaft door before the car is in position. Nor is it in evidence whether or not the floor of an elevator car is 1 inch or 20 inches in thickness. They may vary even more than that. It does not appear from the evidence that a guard 12 or 18 inches in depth would accomplish what is claimed for it in the patent and the argument. Notwithstanding all that is said, it may be true that there is just as much demand for a guard 3 feet in depth as one-half of that depth. In fact, the record is utterly devoid of evidence of utility, except as shown by defendants' attempt to apply it to their elevator. Considering that the device is claimed to supply a crying need, the evidence is startlingly devoid of lachrymose symptoms.

In arriving at the patentable novelty of a device like that of complainant, general and ready acceptance and application to use in the art would be of weight, while want thereof would tend strongly against its novelty, since it is of such doubtful validity as to, at best, be close to the line which divides mechanical skill from patentable novelty. Complainant's device would be infringed by nailing a board from a packing box onto the face of an elevator car floor. If it may be called invention at all, it must be located at the lowest round of the invention ladder. Just at what point below the floor it enters the domain of invention, I am unable to discover from the record.

In fact, whether owing to the meagerness of the record, or to the total want of merit and novelty in the patent itself, I am unable to discover any ground upon which to sustain complainant's contention herein.

The bill is dismissed for want of equity.

Thomas F. Sheridan, for appellant.

Milton J. Foreman, for appellees.

Before JENKINS, GROSSCUP, and BAKER, Circuit Judges.

PER CURIAM. Appellant's bill to enjoin appellees from alleged infringement of letters patent No. 648,309, April 24, 1900, to Spencer, was dismissed for want of equity.

The purposes and character of the device are thus described in the specification:

"When a passenger elevator reaches a landing, the door is often opened to admit passengers while the attendant is still attempting to bring the elevator to the exact level of the floor. In such case, if the elevator is raised slightly above the floor—say two or three inches—a person anxious to get into the elevator can step forward in such a manner that a part of his foot will overhang the edge of the floor and come under the elevator. If the attendant, not seeing this, attempts to lower the elevator, the person's foot may be seriously injured by being jammed between the elevator and the floor. * * * My invention is intended to guard against such an accident. For this purpose, I provide a guard or riser extending downward from the sill below the floor of the elevator a sufficient distance—say from twelve to eighteen inches—and flush with the front of the sill."

The claims are as follows:

"(1) An elevator in combination with a guard having a flat exposed surface extending vertically downward from the doorsill flush with the outer edge of said sill, and at right angles to the floor of the elevator, as and for the purposes set forth.

"(2) In combination, an elevator, tread, and guard, said tread being adapted to be attached to the floor of the elevator upon substantially the level thereof, and said guard being adapted to extend downward vertically therefrom in a plane at substantial right angles thereto, and, when the elevator has descended nearly to a level with the floor of the building, to afford a flat, vertical, protecting surface to any object projecting from the floor surrounding the elevator well, as set forth."

Digitized by Google

The use of "guards or risers" in stairways to prevent persons from thrusting their feet into the openings being common and old, and the employment of a board, or any similar "guard," being the obvious means to cover a hole, we think the patent is void for want of invention.

The decree is affirmed.

(130 Fed. 891.)

YOUNG v. WOLFE.

(Circuit Court of Appeals, Second Circuit. April 21, 1904.)

No. 98.

1. PATENTS—VALIDITY AND INFRINGEMENT—ABDOMINAL PAD AND STOCKING SUPPORTER.

The Young patent, No. 638,540, for a combined abdominal pad and stocking supporter, was not anticipated, discloses patentable invention, and is not invalid for prior use; also *held* infringed.

Appeal from the Circuit Court of the United States for the Southern District of New York.

For opinion below, see 120 Fed. 956.

This cause comes here on appeal from a decree of the United States Circuit Court for the Southern District of New York adjudicating the validity and infringement by defendant of patent No. 638,540, granted to complainant December 5, 1899, for a hose supporter, and ordering an injunction and accounting.

J. P. Bartlett, for appellant.

C. C. Linthicum and J. J. Kennedy, for appellee.

Before WALLACE, LACOMBE, and TOWNSEND, Circuit Judges.

TOWNSEND, Circuit Judge. The defenses of insufficiency of the specification, anticipation, lack of patentability, and prior use were raised in the court below, and disposed of in an opinion which critically discusses the status of the patent and the material evidence relevant to said defenses. We fully concur with the court in its conclusions.

But it was strenuously argued on this appeal that certain prior patents, which were not referred to by the court below in its opinion, especially Minthorn patent No. 13,011, of 1855, Porter patent No. 99,347, of 1870, and the George patent No. 208,387, of 1878, which latter patent it is claimed was not argued and was overlooked by the court, are so "conspicuous in the anticipatory art" as to divest the patented article of all claim of patentable novelty.

The George patent describes and shows a hose supporter consisting of a waistband provided with "hip pieces composed of inelastic border strips, and elastic triangular shaped insertion pieces filling the space between the strips, said material being made elastic in order that when resting on the hips they" shall retain their places and adjust themselves comfortably to the varying exterior form of the

Digitized by Google

hips in all positions of the person. The patentee says that "hip pieces made of rigid and inelastic material will not, if fitted to the hips in one position, cover and fit the hips accurately and comfortably in any other position," but that:

"The central parts of the said hip pieces, by virtue of their elasticity, form pockets for the reception of the projecting part of the hip joints, and thus prevent the displacement of the stocking supporter, which, as hitherto constructed, has been very liable to become displaced and incommode the wearer."

The drawings show the openwork elastic hip pieces as described. The object of the patentee was thus to provide an elastic pocket adapted to receive "the projection of the hip joint," and to permit it to be thus prominently projected in order to hold the supporter in place.

The object of the patentee herein was to repress the prominence of the abdomen, and thus "maintain the abdominal viscera in proper position," by providing an inelastic pad "capable of effecting the repression of a particular part of the body." It was also designed to supersede the older type of abdominal belts, such as those in which the belt passes under the abdomen, and must therefore be always tight, and in which, when the wearer sits down, the tightness is increased, by providing a lever device which, when the wearer stands up, holds the stomach in and gives a straight-front effect, but which releases the pressure when the wearer sits down. In the absence of any contradicting expert testimony, the utility of this device in producing the results sought must be taken as proved. The essence of the invention was the provision of new means to accomplish a new result in a new way by a radical departure from the prior art. In these circumstances, the fact that the old George pocket of 1878 might be forced around to a position in which it might receive and hold the prominence of the abdomen instead of that of the hip bone is immaterial.

All that the Minthorn patent of 1855 showed was a stocking supporter suspended from a belt at a point so far below the abdomen as to leave the "viscera perfectly free in their action." The Porter patent of 1870 merely showed an arrangement of flaps to support a napkin. The suggestion that the clasps on the front of a corset, shown in patent No. 421,086 to Schmidt, could be attached to the Porter flaps, is so patently impracticable as not to require discussion.

An examination of other patents introduced by defendant confirms the conclusion of the court below that the Rogers patent is the nearest approach to the patent in suit, and that it does not anticipate, for the reasons stated by said court in its opinion.

The decree is affirmed, with costs.

Digitized by Google

(131 Fed. 215.)

BEAN-CHAMBERLAIN MFG. CO. v. STANDARD SPOKE & NIPPLE CO. et al.

(Circuit Court of Appeals, Sixth Circuit. July 16, 1904.)

No. 1,302.

1. BANKRUPTCY—ACTS OF BANKRUPTCY—INTENT IN MAKING TRANSFER OF PROPERTY.

In determining the question whether a transfer by an insolvent manufacturing corporation of the greater part of its business and property to another corporation, organized largely by the same persons, in exchange for the stock and bonds of the latter, was made in good faith, or with intent to hinder, delay, or defraud its creditors, so as to constitute an act of bankruptcy, under Bankr. Act July 1, 1898, c. 541, § 3, cl. "a," subd. 1, 30 Stat. 546 [U. S. Comp. St. 1901, p. 3422], the jury may properly take into consideration the natural and necessary result of the transfer, and may infer the intent therefrom.

2. APPEAL—REVIEW—EXCEPTIONS TO CHARGE.

A general exception to the refusal of a number of requests to charge is not well taken if any of such requests were properly refused.

Appeal from the District Court of the United States for the Eastern District of Michigan.

In Bankruptcy.

Fellows & Chandler, for appellant.

Bowen, Douglas, Whiting & Murfin, for appellees.

Before LURTON, SEVERENS, and RICHARDS, Circuit Judges.

RICHARDS, Circuit Judge. This is an appeal from a decree of the lower court, based upon the verdict of a jury, adjudging the appellant, the Bean-Chamberlain Manufacturing Company, a bankrupt.

The principal act of bankruptcy relied on by the petitioning creditors (appellees) was that the appellant, in violation of subdivision 1 of section 3, cl. "a," of the bankruptcy act, had "conveyed, transferred, concealed or removed, or permitted to be concealed or removed, any [some] part of his property with intent to hinder, delay or defraud his creditors, or any [some] of them." Act July 1, 1898, c. 541, 30 Stat. 546, 547 [U. S. Comp. St. 1901, p. 3422].

There was testimony tending to establish the following facts: In the year 1901 the appellant, a Michigan corporation, was engaged in the manufacture of pumps, farm implements, and bicycles at Hudson, Mich. It had been so engaged for some years. The bulk of its property was employed in the pump business. Roscoe Bean was its president; Henry G. Chamberlain, its secretary; and O. R. Pierce, a director, and the indorser on more than half its paper. In the latter part of this year an inventory showed its assets amounted to $72,135.83, while its bills payable aggregated $75,440.42. Some of its bills were overdue. Neither the profits nor the prospects of the company were encouraging. In the year 1902 a company was organized at Toledo, Ohio, called the United States Pump & Supply Company. The leading object of this company was to take over and conduct the property and business of the appellant. Bean and Chamberlain, the president and secretary of the appellant, were made its president and secretary,

Digitized by Google

and Pierce, the leading director and backer of the appellant, one of its directors. The authorized capital stock of the Toledo company was $400,000, half common and half preferred. But $105,000 of the preferred stock and half that much of the common was issued, and of all this but $25,000 was sold on the market. Aside from the appellant, the original arrangement contemplated the taking over of the Standard Manufacturing Company of Toledo at a valuation of $15,000. Later the Lucas Pump Company, of Toledo, was absorbed at a valuation of $8,000. The original arrangement provided for the purchase of the entire plant and business of the appellant. For this, $75,000 in stock was to be given, and cash for the stock on hand to be appraised. This was subsequently modified, and in July, 1903, only the pump plant and business of the appellant were sold on the following terms: $54,000 of the par value of the preferred stock of the United States Pump & Supply Company; $27,000 of the common stock of the same company; $30,000 of the par value in two-year bonds of the same company. All of this being turned over to Mr. Fellows, the attorney of the appellant, as trustee for it. This stock was received by Mr. Fellows upon the condition that it should not be put upon the market for a period of one year. The bonds were secured by a deed of trust on but a part of the Toledo company's property; the deed containing a condition that no bondholder should have the right to institute any action foreclosing the mortgage, except in case of refusal on the part of the trustee to perform some duty imposed upon him. The Toledo company was unable to meet its maturing obligations, owing to a want of ready money, and it never paid any dividends upon its preferred stock. No public record was made of the sale by the appellant to the Toledo company. The sale to the Toledo company was made in July. In September an option was given to the Chamberlain-Rider Company for $9,000 on the implement business, and to the Hudson Manufacturing Company for what proved to be $1,800 on the bicycle business of the appellant. Both these companies were organized or to be organized by former stockholders or employés of the appellant for the purpose of taking over what was left of its business. Following these deals, the books of the appellant company were placed in the hands of Pierce for the purpose of collecting its assets and winding up its business. The appellant had ceased to be a going concern. One of the witnesses testified that Mr. Chamberlain told him that for the past two years they had been losing money on account of the bicycle business, and that they had put the matter in Mr. Pierce's hands to close up. As to the business of the Bean-Chamberlain Manufacturing Company, it had ceased doing business, and, as soon as Mr. Pierce could get things wound up, the company would go out of existence. Mr. Bean was a witness, and testified that they were closing up the business of the Bean-Chamberlain Company as rapidly as they could, and that would have been the ultimate end. That was what they were striving for. Including the real estate, farm implements, and bicycle business, optioned, but not sold, the assets of the appellant at the time of the filing of the petition in bankruptcy, aside from the stock and bonds received from the Toledo company, did not exceed in value $25,000. The liabilities amounted to over $75,000.

Digitized by Google

There being testimony tending to show the above facts, the court left it to the jury to say whether the sale to the Toledo company was made with intent to hinder, delay, or defraud the creditors of the appellant; advising the jury that, in determining the question of intent, they should consider the necessary result of the acts done by the appellant, for every one is presumed to contemplate the necessary consequences of his conduct. It is now contended that the instruction of the court below upon this point was inconsistent with the construction placed by this court upon subdivision 1 of section 3, cl. "a," of the bankruptcy act, in Lansing Boiler & Engine Works v. Ryerson & Son (C. C. A.) 128 Fed. 701.[1] The appellant complains because the court did not instruct the jury that the whole question for them was one of actual intent, and that if they should find that the appellant made the transfers in good faith, without an actual intent to hinder, delay, or defraud its creditors, it could not be adjudged a bankrupt, whatever the result of the transfers may have been. We fail to see wherein the position of the court was inconsistent with our holding in the Lansing Boiler Case. In that case the court below took the view that the giving of a mortgage by a manufacturing company on all its property to secure a part of its indebtedness was an act of bankruptcy, although the property mortgaged was worth enough at a fair valuation not only to liquidate the mortgage, but to pay all the remaining debts of the company twice over. We held that the court erred in assuming that, because the mortgage covered the whole property of the debtor, it necessarily followed that a case was made out under subdivision 1, and that no proof of good faith could prevail against that assumption, saying:

"Upon the vital question of the bona fides of the mortgage, it was of importance to consider, among other things, what was the value of the property mortgaged, when compared with the indebtedness of the company. Moreover, the testimony of those conducting the transaction was admissible to prove its actual good faith. In the end, when all the available light had been shed upon it, the court would be in a situation to judge whether the transaction was prompted by a fraudulent motive or a legitimate one."

The fault we found with the court in that case was that it refused to consider the question whether the mortgagor acted in good faith in giving the mortgage. Our holding was that if the mortgage was given in good faith, and without intent to hinder, delay, or defraud creditors there was no act of bankruptcy. There was testimony tending to show that the property mortgaged was worth $70,000, the mortgage was for $27,000, and the remaining creditor's claims amounted to $8,000. If this was credible, there was left property worth $43,000 to pay claims aggregating $8,000, and the court should have considered these facts both in determining whether the company was insolvent when it gave the mortgage, and whether the mortgage was given in good faith. In the present case the court submitted to the jury the question whether the transfers complained of were made in good faith, or with intent to hinder, delay, and defraud, saying:

"The intent with which an act was done is very difficult to prove. Of course, the mind cannot be probed to ascertain just what that intent was. It must be inferred, and usually is inferred, from the circumstances, from the act itself, and from its necessary effect. If this operation necessarily was to

[1] 63 C. C. A. 253.

Digitized by Google

produce the consequences of the act prohibited by the statute, you may infer the intent to defraud—the intent to hinder, delay, or defraud."

After commenting upon the facts, the court left them to the consideration of the jury, advising them that they were the judges of the facts. In determining the question of the solvency of the company, the court excluded from consideration the stock and bonds received from the Toledo company and deposited in the hands of Fellows, as trustee, because they were under restrictions which rendered them unavailable to meet the claims of creditors. The charge, as a whole, fairly left the determination of the question of good faith to the jury. While the court commented upon the facts, and indicated a view unfavorable to the appellant, at the same time it advised the jurors that they were the final judges of the facts, and that whatever views it might indicate with respect to the facts were in no sense binding upon them. We have no criticism to make because of these comments, since we heartily concur in the views expressed. In our opinion, the proof was of such a nature that no injustice was done to the appellant by the action of the court. For the court to have complied with the request of the appellant, and instructed the jury that, ignoring the natural and necessary result of the transfers made, they should direct their attention solely to the good faith of the transaction, and, whatever the result of its conduct, acquit the appellant, if they found it had acted in good faith, would have been misleading. It was the right of the jury to determine the intent, but in doing so it was the duty of the jury to consider the testimony and the natural presumptions which flow from acts done by design. If a company in failing circumstances willfully places all its property beyond the reach of its creditors, that circumstance is a fact to be considered in determining whether it did so in good faith, without any intent to hinder, delay, or defraud its creditors.

There was no specific exception taken to any particular portion of the charge of the court as given. Ten requests to charge were presented by the respondent below and refused. The exception to this refusal was so worded that we are disposed to regard it rather as a general exception to the refusal to charge all the requests in a lump, than a specific exception to the refusal to charge each separate request (Bogk v. Gassert, 149 U. S. 17, 26, 13 Sup. Ct. 738, 37 L. Ed. 631; Holloway v. Dunham, 170 U. S. 615, 619, 18 Sup. Ct. 784, 42 L. Ed. 1165), so that, some of the requests (notably the eighth and ninth) being clearly unsound, under the rule all are disposed of. We resolve the doubt as to the exception in favor of its being a general one, not only because the proof so abundantly sustains the verdict, but, if the exception be taken as a specific one, we are satisfied that the requests which were proper were sufficiently covered by the charge as given, and that no prejudice resulted to the appellant from the refusal to charge.

The judgment of the court below is affirmed.

Digitized by Google

(131 Fed. 219.)

SACKETT v. McCAFFREY et al.

(Circuit Court of Appeals, Ninth Circuit. May 23, 1904.)

No. 957.

1. INTERNAL REVENUE—STAMP TAX—HOMESTEAD DECLARATION—ACKNOWLEDGMENT.

A notary's certificate of acknowledgment attached to a declaration of homestead was subject to a stamp tax under War Revenue Act June 13, 1898, c. 448, § 13, 30 Stat. 454 [U. S. Comp. St. 1901, p. 2294], requiring documents mentioned in the schedule, and certificates of any description required by law not otherwise specified, to be stamped.

2. APPEAL—RECORD—ORIGINAL DOCUMENTS—CERTIFICATION.

Where the Circuit Court, as authorized by Court Rule 14, subd. 4 (91 Fed. vii, 32 C. C. A. lxxxix), transmitted to the Circuit Court of Appeals an original document admitted in evidence over objection that it was not stamped, it was immaterial that the copy of the document contained in the record did not show either that the document or the certificate of acknowledgment indorsed thereon by a notary public was not stamped.

3. SAME—JUDICIAL ACTS.

Under Civ. Code Mont. §§ 1606, 1609, 1611, providing that acknowledgments by married women to instruments purporting to be executed by them must be taken in the same manner as that of any other person, and shall be that she "executed the same," a notary, in taking a married woman's acknowledgment to a declaration of homestead, required by section 1700, does not act as a judicial officer.

4. SAME—STATE FUNCTIONS.

Since stamps required to be affixed to a notary's certificate of acknowledgment to a declaration of homestead, under War Revenue Act June 13, 1898, c. 448, § 14, 30 Stat. 455 [U. S. Comp. St. 1901, p. 2296], are required to be furnished by the person for whose benefit the instrument is furnished such tax is not objectionable on the ground that the notary, in taking the acknowledgment and indorsing his certificate, was exercising a function of the state government not subject to federal taxation.

5. SAME—UNSTAMPED INSTRUMENTS—EVIDENCE—STATE DECISIONS.

Decisions of state courts that instruments, though unstamped, as required by War Revenue Act June 13, 1898, c. 448, § 14, 30 Stat. 455 [U. S. Comp. St. 1901, p. 2296], were admissible in evidence, have no application to federal courts.

6. SAME—STATUTES—REPEAL.

War Revenue Act, June 13, 1898, c. 448, § 13, 30 Stat. 454 [U. S. Comp. St. 1901, p. 2295], providing for a stamp tax on certificates attached to legal instruments, was amended by Act March 2, 1901, c. 806, § 7, 31 Stat. 941 [U. S. Comp. St. 1901, p. 2294], which, however, specifically provided for the continuing of the law with regard to the stamping of unstamped instruments subject to a stamp tax at the time they were issued; and section 14 of the original act (30 Stat. 455 [U. S. Comp. St. 1901, p. 2296]), providing that unstamped instruments should not be recorded or received in evidence, was not repealed either by Act March 2, 1901, or by Act April 12, 1902, c. 500, 32 Stat. 96 [U. S. Comp. St. Supp. 1903, p. 276], which repealed the whole of Schedule A of the original act; and Rev. St. § 13 [U. S. Comp. St. 1901, p. 6], declares that the repeal of a statute shall not release or extinguish any penalty, forfeiture, or liability incurred thereunder, unless the repealing act so expressly provides, etc. *Held*, that the repeal of the act requiring certificates to be stamped did not authorize the subsequent admission in evidence of an instrument containing an unstamped certificate of acknowledgment subject to the tax.

In Error to the Circuit Court of the United States for the District of Montana.

Digitized by Google

The plaintiff in error, a citizen of New York, brought this action in ejectment against the defendants, citizens of Montana, to recover possession of lot 11 in block 89 in the city of Anaconda, Mont., alleged to be of the value of $2,500 and more. The plaintiff in error bases her claim of title to the premises in controversy upon a sheriff's deed dated May 19, 1902, issued pursuant to an execution sale upon a deficiency judgment against the defendants in error. The defendants in error deny the right of the plaintiff in error to the premises, and claim title to the property under a declaration of homestead dated November 24, 1900, and made by Mary McCaffrey; her husband, Joseph McCaffrey, not having made such selection. The plaintiff in error, in reply to this defense, alleges that the declaration of homestead filed by Mary McCaffrey was wholly void and of no effect by reason of the omission to state an estimate of the actual cash value of the premises therein described, and denies that the premises in question could have been a homestead, because the defendants in error at the time of filing the pretended declaration of homestead, and long prior thereto, did not reside on the entire premises described, a portion of the lot in question being occupied by and rented to tenants of the defendants in error, and entirely distinct from the premises used by defendants in error as a home. Upon the trial, for the purpose of showing that the premises in controversy were at the date of their sale under execution exempt from execution, the defendants in error offered in evidence the homestead declaration of Mary McCaffrey, dated November 24, 1900, covering the entire premises in controversy to which plaintiff in error objected on the grounds (1) that the instrument was not stamped as required by the laws of the United States in force at the date of its execution; (2) that the notarial certificate of acknowledgment to said instrument was not stamped as required by the laws of the United States at the date of its execution; and (3) that the filing of record of the same in its unstamped condition was in violation of said laws, and the record thereof was void and of no effect as against the rights of the plaintiff in error. The objection was overruled, and the declaration of homestead admitted in evidence. The jury returned a verdict in favor of the defendants in error, and a judgment was entered thereon. Upon this judgment a writ of error was obtained by the plaintiff in error.

E. B. Howell and Charles E. Sackett, for plaintiff in error.

William B. Rodgers, for defendants in error.

Before GILBERT, ROSS, and MORROW, Circuit Judges.

MORROW, Circuit Judge (after stating the facts as above). The specification of error mainly relied upon is the admission in evidence of the homestead declaration of Mary McCaffrey over the objection of the plaintiff in error that it was an instrument required by law to be stamped, under the provisions of the act of June 13, 1898, and, being in an unstamped condition, was not entitled to be recorded or admitted in evidence. The act of Congress approved June 13, 1898, entitled "An act to provide ways and means to meet war expenditures, and for other purposes" (30 Stat. 448, 458, c. 448 [U. S. Comp. St. 1901, pp. 2284, 2300]), provides in Schedule A for the prepayment of an internal revenue tax by means of stamps, denoting the tax on certain documents to which the stamps are to be affixed. Among other documents mentioned in this schedule as subject to a stamp tax is that of a "certificate of any description required by law, not otherwise specified in this act, ten cents." Within this very broad language the plaintiff in error claims that the homestead declaration is itself a certificate subject to the stamp tax; but as this claim is not seriously urged it need not be considered, except in connection with the notarial certificate of acknowledgment, which the law of Montana requires to be indorsed upon or attached to the instrument before it

Digitized by Google

can be recorded. The declaration of a homestead covering the property in controversy was executed by Mary McCaffrey November 24, 1900, and on the same day its execution was acknowledged by her before a notary public, and his certificate to that effect was indorsed upon the instrument, but no internal revenue stamp was affixed to the declaration of homestead or the accompanying notarial certificate of acknowledgment, and because of the absence of the stamp it is urged by the plaintiff in error that the court erred in admitting the document in evidence.

Section 14 of the act of June 13, 1898 (30 Stat. 455 [U. S. Comp. St. 1901, p. 2296]), provides:

"That hereafter no instrument, paper, or document required by law to be stamped, which has been signed or issued without being duly stamped or with a deficient stamp, nor any copy thereof, shall be recorded or admitted or used as evidence in any court until a legal stamp or stamps denoting the amount of tax shall have been affixed thereto as prescribed by law."

In our opinion, the certificate of acknowledgment was subject to the stamp tax under this statute, and should have been stamped before being admitted in evidence.

It is objected that the copy of the declaration of homestead, as printed in the record, does not show that either that instrument or the certificate of acknowledgment indorsed thereon by the notary public was not stamped as required by the laws of the United States. Under rule 14, subd. 4, of the rules of this court (91 Fed. vii, 32 C. C. A. lxxxix), the judge of the Circuit Court has transmitted to this court the original homestead declaration, from which it appears that neither the homestead declaration nor the certificate of acknowledgment has been stamped.

It is next objected that a notary public acts judicially in taking and certifying an acknowledgment to a deed or other instrument affecting real estate, and that Congress has no power to impose a tax upon the judicial acts of a state officer. In some states it has been held that the taking of an acknowledgment of a married woman joining with her husband in granting an estate in real property is a judicial act when, under the law, the officer is required to acquaint the wife with the contents of the instrument separate and apart from her husband, and ascertain whether the execution of the instrument is her free and voluntary act. In such case the officer necessarily acts judicially, because he is obliged to draw his own conclusions from an examination conducted by himself as to the voluntary or involuntary character of the act of the wife, and to base his official conduct upon the conclusions so drawn. People v. Bartels, 138 Ill. 322, 332, 27 N. E. 1091. In the present case there is no such requirement for a married woman making a declaration of homestead. The statute of Montana provides that, "in order to select a homestead the husband or other head of a family, or in case the husband has not made such selection, the wife, must execute and acknowledge in the same manner as a grant of real property is acknowledged, a declaration of homestead, and file the same for record." Civ. Code Mont. § 1700. The acknowledgment of a married woman to an instrument purporting to be executed by her must be taken the same as that of any

Digitized by Google

other person (section 1606), and the acknowledgment is that she "executed the same" (section 1609, 1611). Clearly, the notary performed no judicial function, either in taking such an acknowledgment or in indorsing his certificate upon the declaration that she had appeared before him, that she was personally known to him to be the person whose name was subscribed to the instrument, and acknowledged that she executed the same.

It is contended, further, that the notary, in taking the acknowledgment to the declaration of homestead and indorsing his certificate thereon, was exercising a function of the state government, and that the certificate was therefore exempt from a stamp tax, under the decision of the Supreme Court in Buffington v. Day, 11 Wall. 113, 20 L. Ed. 122. The law involved in that case was the act of Congress imposing a tax upon the gains, profits, and income of every person residing in the United States. The Supreme Court held that the right of the state to administer justice through the courts, and to employ all necessary agencies for legitimate purposes of state government, were not proper subjects of the taxing power of Congress, and that the salary of a judicial officer of the state was therefore exempt. This well-known principle of self-preservation accorded to the government of the several states has no application to the present case. The notary is not taxed as an officer of the state or at all. The individual for whose use and benefit the certificate is made pays the notary's fees and the tax upon the certificate. The commissioner of internal revenue, having in charge the administration of the internal revenue laws of the United States, has decided that the stamps required upon certificates by the provisions of the act under consideration should be furnished by the person applying for the instrument, and for whose use and benefit the same is issued. Circular No. 503, dated August 16, 1898.

The defendants in error refer to a number of cases wherein certain state courts have held that Congress has no power to prescribe rules of evidence for state courts, and that the provisions of the stamp act in this respect are not intended to govern such tribunals. Without discussing the correctness of these decisions, it is sufficient to say that they have no application to federal courts, where the laws of Congress prescribing rules of evidence must be observed, unless open to some constitutional objection, which has not been suggested with respect to this statute.

By the act of March 2, 1901 (31 Stat. 938, c. 806 [U. S. Comp. St. 1901, p. 2286]), the act of June 13, 1898, was amended, and the provision under consideration relating to stamp taxes on certificates was repealed. Section 7 of the amendatory act (31 Stat. 941 [U. S. Comp. St. 1901, p. 2294]) provides specifically for a continuing law for the stamping of unstamped instruments subject to a stamp tax at the time they were issued, and section 14 of the original act (30 Stat. 455 [U. S. Comp. St. 1901, p. 2296]), providing that unstamped instruments should not be recorded or received in evidence, was not repealed, nor was it repealed by the act of April 12, 1902 (32 Stat. 96, c. 500 [U. S. Comp. St. Supp. 1903, p. 276]), which repealed the whole of Schedule A. But defendants in error contend that when the law requiring

Digitized by Google

certificates of acknowledgments to be stamped was repealed the penalty for a failure to stamp such certificates could not be enforced. This is not the law, as appears from the provisions of the repealing acts. But, further than this, section 13 of the Revised Statutes [U. S. Comp. St. 1901, p. 6] provides as follows:

"The repeal of a statute shall not have the effect to release or extinguish any penalty, forfeiture, or liability incurred under such statute, unless the repealing act shall so expressly provide, and such statute shall be treated as still remaining in force for the purpose of sustaining any proper action or prosecution for the enforcement of such penalty, forfeiture, or liability."

There can be no question but that the court below was in error in admitting the declaration of homestead in evidence, but we do not wish to be understood as holding that, if the certificate of acknowledgment were now stamped, as provided in section 13 of the act of June 13, 1898, as amended by Act March 2, 1901, c. 806, 31 Stat. 941 [U. S. Comp. St. 1901, p. 2295], it would not be admissible in evidence on a new trial.

The judgment is reversed, with directions to grant a new trial.

(131 Fed. 223.)

BOYD et al. v. SCHNEIDER et al.

(Circuit Court of Appeals, Seventh Circuit. April 12, 1904.)

No. 1,034.

1. NATIONAL BANKS—NEGLIGENCE OF DIRECTORS—STOCKHOLDERS—RIGHT TO SUE.

The national bank act, providing for the administration of the affairs of an insolvent national bank by a receiver appointed by the Comptroller of the Currency, does not prevent depositors of an insolvent bank from maintaining a suit against its directors for negligently permitting its officers to loan the bank's assets in violation of such act, constituting a breach of the bank's implied contract with such depositors, inherent in the contract of deposit, that the bank would use such deposits and its other assets in conformity with the safeguards provided by law.

2. SAME—EQUITABLE JURISDICTION.

Where several depositors of a national bank had claims against a number of the bank's directors, arising out of their failure to take steps to prevent the bank's assets being improperly loaned, and none of such depositors could, by separate suits at law, recover that to which he was entitled, such depositors were entitled to maintain a single suit against such directors in equity.

3. SAME—MULTIFARIOUSNESS.

Where the right of each of several depositors of an insolvent national bank to recover against several of the bank's directors, made parties to the bill, was based on the same theory, the bill was not multifarious.

4. SAME—SURVIVAL OF ACTION.

An action by depositors against directors of an insolvent national bank to recover damages for breach of the directors' implied contract to see that the bank's assets were used in the manner prescribed by the national bank act is an action on contract, and survives against representatives of deceased directors.

5. SAME—AMENDMENT OF BILL.

Where several depositors of an insolvent national bank filed a bill against its directors for a breach of their implied contract to see that

Digitized by Google

the bank's assets were used according to law, but the bill failed to allege the time when complainants' deposits were made, complainants were entitled to leave to amend in that respect.

6. SAME—PARTIES.

That certain of the defendants sued were not directors of an insolvent bank at the time acts of mismanagement complained of occurred, did not exempt them from liability to depositors, where it appeared that during their term of office dividends were paid from the capital, which was also alleged as a ground of action.

Appeal from the Circuit Court of the United States for the Northern Division of the Northern District of Illinois.

See 124 Fed. 239.

The bill was by appellant, a depositor of the National Bank of Illinois, on behalf of himself and all others who might join him, against appellees, directors of the bank, to recover losses to the assets of the bank, otherwise distributable to the depositors and creditors, alleged to have been brought about by the negligence and misconduct of such directors.

The bill shows that the National Bank of Illinois, organized in 1871, and granted an extension of corporate existence in 1891, was, until closed by the comptroller of the currency, December 19th, 1896, engaged in a general banking business in Chicago, its capital stock after 1891 being one million dollars; that on the failure of the bank, it had more than eleven million dollars on deposit from more than four thousand depositors; that the deposits of the appellants, twenty-six in all, amounted to more than four hundred and forty-seven thousand dollars; that the depositors have received from the receiver but seventy per cent. of their deposits; that the remaining assets do not exceed in value two millions of dollars, leaving a deficit of over a million and a half dollars; and that the insolvency of the bank began about 1893, its assets steadily decreasing from that time until it was closed in 1896.

The bill sets out with particularity various acts of alleged neglect of duty, and misconduct, among which may be stated as the most important the following: (1) That Hammond, vice-president, and Moll, cashier, owners of interests in the Calumet Electric Railway Company, and left by the directors to their own discretion, began in 1891 to loan to such company, both in its own name and the names of its officers, employees and agents, sums that amounted at the time of the failure to three million five hundred thousand dollars, upon the collateral solely of the assets of said company; that to evade the provisions of the national banking act respecting the amounts loanable to any one person, five hundred thousand dollars of the amount thus loaned was carried on the books of the bank in an account known as "foreign exchange"; that the loans were made ostensibly to employees of the company, some of whom lived on small salaries, had no financial standing, and except one or two of the officers, had no interest in the property; that all the loans, together with the real purpose for which, and the real borrowers to whom, the loans were made, were discernible on the books of the bank; and that the present value of the assets of the Calumet Company are not to exceed two millions of dollars;

(2) That Schneider, the president of the bank, left to his own discretion by the directors, loaned, without security, to a soninlaw, and to two corporations of which such soninlaw was president, sums exceeding half a million of dollars, all of which was lost; also, without security, to the firm of E. S. Dryer & Company, one member of which was another soninlaw, sums exceeding a half million of dollars, all of which was lost;

(3) That during all this time, and up to the failure, the bank continued to pay dividends to its stockholders out of its capital stock.

The bill shows that the bank kept a discount ledger on which were entered all the loans from day to day, showing the names of the borrowers, and the security, if any, including the loans above set forth, which discount ledger was always open to the inspection of the directors; that the bank also kept an offering book, but such book contained, not the loans asked for, but the loans made from day to day, which book was on various days, submitted to such

Digitized by Google

directors as called at the bank, and the loans entered in most cases, marked as approved by certain of the directors.

The bill shows that in December, 1895, the comptroller of the currency wrote each one of the directors, calling attention to the fact that the loans to the Calumet Company amounted at that time to one million one hundred and seventy thousand dollars, and notifying them that such loans were in violation of law and good banking; that such letters were received by each of the directors, and their receipt acknowledged; that in June, 1896, another warning of like character from the comptroller of the currency was sent to the directors; but, notwithstanding these notices, the Calumet Company, in the way already pointed out, was allowed to increase its then existing loans by a million of dollars, and dividends continued to be paid.

The bill further avers that the directors, knowingly and wilfully, permitted the officers of the bank to violate the provisions of law relative to the bank; that none of them made diligent or reasonable effort to see to it that the total liabilities to the bank of any one person, did not exceed the amount designated by law, but that they knowingly and negligently sanctioned the practices by which such provisions of law were evaded; that they knowingly and negligently sanctioned or permitted, in the form of dividends, the withdrawal of portions of the capital stock; that they failed to see that correct books of account were kept, or proper business methods followed in regard to such books; negligently suffering the accounts to be falsified; that they did not exercise due care in the selection and retention of the officers of the bank, permitting Hammond, vice-president, and Moll, cashier, interested as stockholders in the Calumet Company, to largely control the affairs of the bank, and use and lend its money and assets as they saw fit; that no finance or auditing company was given supervision over the making of loans; and that through this and other means, the losses suffered by the bank are directly traceable to the negligence of the directors.

The bill shows that the receiver of the bank has been asked to bring suit against the directors, to recover the amounts thus lost; that to the comptroller of the currency the same request has been made; but that the request has by both of them been denied. The bill prays that an account may be taken of the assets of the bank lost through the negligence, carelessness and misconduct of the directors, and each of them, that the amount each of the directors should be held responsible for may be ascertained, and each decreed to pay the amount so found due from him, to the receiver of the bank, to be by such receiver distributed in accordance with law.

The bill was demurred to, first for multifariousness; second for want of particularity; third that there was no proper allegation of interest of the complainants therein prior to the date on which the bank failed; fourth, that the remedy is at law; and fifth, that certain paragraphs therein state an action of deceit. The demurrer having been sustained, complainants asked leave to amend to show that they had been depositors continuously for more than five years prior to the failure of the bank; but such amendment was denied.

The further facts are stated in the opinion of the court.

William Burry and F. B. Johnstone, for appellants.

John J. Herrick, Joseph B. Leake, Jesse A. Baldwin, John P. Wilson, and E. Allen Frost, for appellees.

Before JENKINS, GROSSCUP, and BAKER, Circuit Judges.

GROSSCUP, Circuit Judge, after the foregoing statement of facts, delivered the opinion of the court.

We do not deem it necessary to pass on the question whether, between directors of a national bank and its depositors, there subsists such a trust relation as would bring this case, as one arising out of a trust, under equitable cognizance; nor need we pass upon appellants' contention that the receiver of a national bank, being a trustee for the depositors, who has refused to bring action, courts of equity on that ac-

Digitized by Google

count are clothed with jurisdiction to proceed against the directors at the suit of the depositors. In our judgment the case stated in the bill is one of equitable cognizance, but on considerations entirely distinct from the propositions just stated. To this we will recur after dealing with some of the affirmative propositions of the appellees.

The chief insistence of the appellees is, that the right of action stated in the bill, if anything at all, is an asset of the bank vested by law in the receiver on his appointment, and therefore not one on which simple contract creditors are entitled to bring suit. If there be no privity of contract, or obligation of duty, between the directors and the depositors, this contention may be sound; but if the nature of the contract of deposit is such that the duty of the directors in the premises runs directly to the depositors, there can be no doubt that the depositors can, in their own right, bring such action as may be essential to the fulfillment of their rights. This leads to an examination of the nature of the relation that subsists between the directors of the bank and its depositors.

The relation of depositors to the bank, and so far as directors stand liable for the doings of the bank, the relation of the depositors to the directors, while that of debtor and creditor, is something more than the mere relation of debtor and creditor. The contract of deposit is a loan; but not a loan pure and simple. On the acceptance of the deposit, a promise is raised that the bank will repay it on demand, or at the time stipulated; and to that extent the transaction is a loan. But when this much is said, the whole contract is not stated. The parties deal with each other on a basis, not merely that of borrower and lender, but on the basis, that the party receiving the money is a bank, organized under the laws of the United States, and subject to the provisions of law, present and future, relating to the custody and disposition of the money deposited; and that the party loaning the money is a depositor, leaving his money with the bank on the faith that such provisions respecting the custody and disposition of the deposit, will be observed. In legal effect, the depositor says, Here is my money; in consideration of its reception, and such interest as you pay, you can have its use; but only on this condition, that the use conform to the safeguards provided by the law. The acceptance of money thus tendered, implies that the bank and its directors, so far as they are responsible for the doings of the bank, agree to conform to the conditions named. The law governing the custody and disposition of deposits thus enters into and forms a part of, the relation created between the parties (Walker v. Whitehead, 16 Wall. 314, 21 L. Ed. 357); thereby creating direct privity of relation between the directors and the depositors.

The bill clearly shows that the deposits in the custody of the National Bank of Illinois, as an entirety, were used and disposed of contrary to the provisions of law relating to custody and disposition. The deposits were disposed of in sums, and to persons forbidden by law; and were used to pay dividends when no dividends had been earned. The bill shows also, that the directors had knowledge of some of these violations of law, such as the payment of dividends out of the capital stock, and the increase of loans in large amounts to the Calumet Company, after notice from the comptroller that such loans were contrary to law; and also, that of other violations of law they would have been advised,

Digitized by Google

had reasonable diligence on their part been exercised. It seems clear to us that on such a state of facts, the directors are answerable in some kind of action, directly to the persons to whom their duty ran; and that, to the extent that the depositors suffered losses therefrom, the right of action, whatever it may be, runs directly to the depositors as a class. The question is not determined by whether the amount thus recovered might not become an asset of the bank; but whether, aside from that, the depositors may not enforce the liability as a right special to them—a right growing out of the contract of deposit, and not common therefore, to stockholders and other creditors not depositors. Unless the national banking act cuts deep enough to cut out these individual rights of action, the depositors have, in some form, a right to bring action on the claims set forth.

The national banking act provides a system for the collection of the assets of an insolvent bank, and their distribution among creditors. The legal machinery for this is a receiver appointed by the comptroller of the currency, and removable by him, in whom is vested all rights of receivership, to the exclusion of all other receivers or assignees; assessments leviable by the comptroller against the stockholders; and procedure for the allowance of claims, the payment of dividends, and the distribution of money thus collected. All this, however, is in the nature of administration. Barring the matter of assessment, it puts into the hands of receiver and comptroller only such powers as the bank itself had before becoming insolvent. It substitutes for the bank solvent, the machinery provided for the bank insolvent. Now the bank solvent, may sue and be sued, complain or defend in any court of law or equity, as fully as natural persons. We see in the act no reason to say that the bank insolvent, does not possess the same status; only it is exercisable through the receivership provided by law. There is no provision that exempts the insolvent bank or its directors, from suit (Kennedy v. Gibson, 8 Wall. 498, 19 L. Ed. 476); no provision that evinces an intention on the part of congress that persons having direct legal relations with insolvent banks, or their directors, may not have such relations interpreted and enforced through the judicial department of the government.

The cases called to our attention by the appellees do not bear upon this point.* These cases hold that national banks cannot, at the suit of creditors, be thrown into bankruptcy, or their affairs wound up in accordance with the statutes of states providing for the winding up of corporations. But proceedings to wind up, and bankruptcy proceedings, are essentially administrative. No one doubts the power of congress to provide the machinery for such administration, and no one doubts the intention of congress, in the enactment of the national banking act, that to the extent national banks were concerned, such machinery should be embodied in the powers conferred upon the comptroller. But it is one thing to make provision for the administration of the affairs of an insolvent or dead bank—provision that will exclude

*In re Manufacturers' National Bank, 5 Biss. 499, Fed. Cas. No. 9,051; Washington National Bank v. Eckels (C. C.) 57 Fed. 870; Kennedy v. Gibson, 8 Wall. 498, 19 L. Ed. 476; Pahquioque Bank v. Bethel Bank, 36 Conn. 325, 4 Am. Rep. 80.

Digitized by Google

all other forms of administration; and quite another thing to deny to parties their constitutional right to appeal to the courts for the enforcement of contract or other legal obligations. So distinct are these matters in their legal nature, that we cannot conclude from the presence, in a statute like the national banking statute, of the one, an intention to include also the other. On the whole matter our conclusion is, that considering arguendo that the receiver might have brought the action stated in the bill, his right to bring such action is not exclusive; and that, to the extent the directors are responsible specially to the depositors, the depositors have a right of action—an action, adequate to the fulfillment of the obligation due the depositors by the directors.

The remaining question is, whether the remedy should have been in the form of actions at law, or a suit in equity such as this.

The case, as already stated, appears to us to be one clearly of equitable cognizance. The rule relating to equitable jurisdiction applicable to this case is laid down by Pomeroy as follows: Where a number of persons have separate or individual claims and rights of action against the same party, all arising from some common cause, governed by the same rule, and involving similar facts, so that the whole matter might be settled in a single suit brought by all the persons uniting as co-plaintiffs, or one of the persons suing on behalf of himself and others; or, where one party has a common right against a number of persons, the establishment of which would regularly require a separate action brought by him against each of these persons, instead whereof he might procure the whole to be determined in one suit, a bill in equity will lie on the ground that it prevents a multiplicity of suits. Pomeroy, Equity Juris. (2d Ed.) vol. 1, § 245.

The case stated in the bill goes—in the matter of equitable cognizance—even beyond the rules thus laid down. It is a case not alone of a number of persons having separate and individual claims against one party, arising from a common cause; or one person having rights against a number of persons, arising from a common cause; but the case of a number of persons having each a right against a number of persons, all arising from a common cause. To this, too, must be added the further consideration, that neither of the depositors could, by separate suits at law, recover that to which he is entitled; for the defendants to such suits, being directors who served varying terms, and subject, therefore, to varying obligations, could not be called to complete accounting and apportionment in a suit at law. Our conclusion is that the bill filed is the proper way to obtain an enforcement of whatever rights the depositors individually, or as a class, may have against the directors individually, and as a class. Indeed, both our conclusion on this point of jurisdiction, and on the right of depositors to bring the action directly, without the intervention of the receiver, seems to be sustained, indirectly at least, in Briggs v. Spaulding, 141 U. S. 132, 11 Sup. Ct. 924, 35 L. Ed. 662. There the suit was in equity by a depositor—the First National Bank of Buffalo through its receiver—against the directors, and no question seems to have been made that the suit in that form would not lie. While but four of the Justices were for sustaining the depositor's claim, the other five denied it, not on the

Digitized by Google

ground that the suit would not lie, but that the claim was not made out by the proofs.

In view of what has already been said, the other points made in support of the decree below lose their point. The bill is not multifarious, because it does not proceed on distinct theories of recovery. The bill may have some surplusage, but it sets forth the obligations of the directors and their breach, with sufficient certainty. And the suit survives against the representatives of deceased directors, because it is a suit on contract, and not in tort. We think, too, under all the circumstances, that appellants ought to have leave to amend with respect to the time when their deposits were made.

The special demurrers taken on the part of certain defendants, that they were not shown to have been directors at the time certain acts complained of were done, cannot be sustained. The bill shows, that during the whole period covered by the complaint, dividends were being paid out of capital stock; and to that extent, at least, all of the defendants named, are answerable to the depositors.

The decree of the Circuit Court will be reversed, and the case remanded with instructions to give appellees leave to file the amendment proposed, and thereupon to overrule the demurrers to the bill.

(131 Fed. 229.)

THE TITANIA.

(Circuit Court of Appeals, Second Circuit. June 23, 1904.)

No. 196.

1. SHIPPING—BILL OF LADING AS EVIDENCE OF RECEIPT.

A bill of lading issued by the master of a ship is prima facie evidence of, and, in the absence of proof to the contrary, establishes, the receipt on board of the goods therein described.

2. SAME—CONSTRUCTIVE DELIVERY.

To establish a constructive delivery by a ship of goods deposited on the wharf, it is necessary for the carrier to show that he separated the goods from the general bulk of the cargo, designated them, and gave due notice to the consignees of the time and place of their deposit, and a reasonable time for their removal.

3. SAME—CONTRACT.

The question of the duty of the carrier to deliver goods carried is to be determined by the bill of lading, without regard to the charter party, of which the shipper had no notice till after the terms of his contract with the ship had been unalterably fixed.

4. SAME—WAIVER.

Any right of the carrier under the contract to compel consignees to take goods shipped "from alongside" is waived by the carrier unloading the goods onto the dock.

Appeal from the District Court of the United States for the Southern District of New York.

For opinion below, see 124 Fed. 975.

Appeal by claimant from a decree of the District Court for the Southern District of New York in favor of the libelants for $1,412.93

¶ 2. See Shipping, vol. 44, Cent. Dig. § 426.

Digitized by Google

damages for failure to deliver 56 bales of hemp. The opinion of the District Court is reported in 124 Fed. 975.

J. Parker Kirlin and Charles R. Hickox, for appellant.
Theodore M. Taft, for appellees.

Before LACOMBE, TOWNSEND, and COXE, Circuit Judges.

COXE, Circuit Judge. We agree with the District Judge in holding that, in the absence of any proof to the contrary, the bills of lading sufficiently establish the receipt of the bales in controversy on board the ship at Manila. These bills duly acknowledged the receipt in good order of 1,500 bales of hemp as numbered and marked on the margins "to be delivered in the like good order and condition at the aforesaid port of New York." The libelants have never received the 56 bales which are in dispute in this action. The law applicable to such a situation is clearly stated by the Supreme Court in The Eddy, 5 Wall. 481, 495, 18 L. Ed. 486, as follows:

"Delivery on the wharf in the case of goods transported by ships is sufficient under our law, if due notice be given to the consignees and the different consignments be properly separated, so as to be open to inspection and conveniently accessible to their respective owners. Where the contract is to carry by water from port to port an actual delivery of the goods into the possession of the owner or consignee, or at his warehouse, is not required in order to discharge the carrier from his liability. He may deliver them on the wharf; but to constitute a valid delivery there the master should give due and reasonable notice to the consignee, so as to afford him a fair opportunity to remove the goods, or put them under proper care and custody. When the goods, after being so discharged and the different consignments properly separated, are not accepted by the consignee or owner of the cargo, the carrier should not leave them exposed on the wharf, but should store them in a place of safety, notifying the consignee or owner that they are so stored, subject to the lien of the ship for the freight and charges, and when he has done so he is no longer liable on his contract of affreightment."

In order to make a valid delivery, which relieves the carrier from liability, it is necessary to show that the goods in question were landed on the wharf, segregated from the general cargo so as to be conveniently accessible to the consignee, that notice was given of their arrival and location and a reasonable time allowed for their removal. Manifestly it is not a good delivery to deposit the entire cargo of the ship on the wharf and inform inquiring owners that if their goods arrived they will be found somewhere in the general mass of merchandise.

There was no actual delivery; this proposition must be conceded. To establish a constructive delivery it was necessary for claimant to show, first, that he separated the libelants' goods from the general bulk of the cargo; second, that he properly designated the goods; third, that he gave due notice to the libelants of the time and place of the delivery. The Ben Adams, 2 Ben. 445, 449, Fed. Cas. No. 1,289. There is no proof sufficient to establish any of these essential conditions to relief from liability. The claimant reaches the conclusion that a proper delivery was made by a process of syllogistic reasoning, which may not unfairly be epitomized as follows: If the missing bales were put on board at Manila they were carried safely to

Digitized by Google

New York. All of the bales which reached New York were landed on the Staten Island pier and consignees notified. Ergo the missing bales were constructively delivered to libelants. It is this presumption which the claimant seeks to substitute for proof of delivery, actual or constructive, which he is bound to furnish.

The District Judge sums up the situation as follows:

"The only evidence in the case is that contained in the receipt in the bills of lading; and that binds the ship until it shows by equally cogent proof either that the bills of lading were false, or that it has delivered the goods."

The claimant is in the unfortunate predicament of being called upon for proof and offering conjecture in lieu thereof. The claimant's brief concedes that "the disappearance of the bales in suit, if they were ever on the wharf, cannot be absolutely accounted for in any satisfactory manner," and yet upon him the law imposed the duty of accounting for them.

As before stated the bills of lading were prima facie evidence of the receipt of the hemp. We have, however, examined the testimony upon this question sufficiently to conclude that the weight of evidence, irrespective of the bills of lading, tends to show that the goods were actually on board at Manila. So far as the bales in suit are concerned they may have been lost soon after they were placed on the wharf, or they may have been carried away by other cargo owners by mistake. If the record contains any proof that these bales were separated from the rest, libelants notified and an opportunity given them to carry their property away, we have failed to discover it.

The Titania was chartered by her owner to Warner, Barnes & Co., of Manila, November 12, 1902. The charter party was introduced in evidence by the libelants. The twelfth clause is as follows: "The cargo to be brought alongside and taken from alongside at merchant's risk and expense; and to be carefully stowed on board at steamer's expense." The District Judge ruled that the charter party had no bearing on the controversy and that the libelants were not bound by its terms, their contract being shown by the bills of lading. We incline to the opinion that this ruling is correct, the preponderance of evidence being that the libelants had no notice or knowledge of the charter party until after the terms of their contract with the ship had been unalterably fixed. The Pietro G. (D. C.) 39 Fed. 366.

Moreover, assuming notice by libelants of the clause quoted and that it is capable of the interpretation advanced by claimant, it is manifest that no one connected with the discharging of the ship ever asserted such a construction. If the master had the right to compel the libelants to receive the hemp at the end of the ship's tackles he should have so informed them and proposed such a delivery. Instead of doing so he proceeded to unload in a manner which made it impossible for the libelants to comply with the provision of the charter party in question even if they had known of it. The master testifies:

"The arrangement made between the ship and the dock with reference to the unloading of the cargo and the use of the dock for that purpose was that the cargo was to be discharged according to the custom of the port. The custom of the port, as I understand it, is to land the cargo on the wharf and deliver it from there. The ship paid for the use of the wharf for that purpose."

Digitized by Google

If, then, the claimant acquired any right to compel the libelants to take the hemp "from alongside," he waived the right by delivering from the dock in accordance with the provisions of the bills of lading and the custom of the port.

Although concurring in the foregoing the majority of the court are of the opinion, in which, however, the writer does not concur, that the evidence establishes the following propositions: First, that the 56 bales in controversy were actually placed on the dock and weighed by libelants' agents; and, second, that the ship undertook to deliver into lighters. Concededly these bales were not put into lighters sent to the wharf by the libelants and as the claimant has failed to show a delivery, pursuant to the agreement as aforesaid, the liability of the ship is established.

The decree of the District Court is affirmed with interest and costs.

(131 Fed. 232.)

In re HAAS CO.

TAYLOR v. ZIEGENHAGEN.

(Circuit Court of Appeals, Seventh Circuit. April 12, 1904.)

No. 1,042.

1. CORPORATIONS—VALIDITY OF MORTGAGE—SECURING DEBTS OF STOCKHOLDERS.

A corporation has no power to execute its notes, secured by a mortgage of its property, for individual debts of its stockholders incurred in the purchase of their stock, to the exclusion of creditors of the corporation, although their claims arose after the mortgage was executed and recorded.

Appeal from the District Court of the United States for the Northern District of Illinois.

The Haas Company, a corporation organized under the laws of Illinois, October 24th, 1892, with an authorized capital stock of eighteen thousand dollars, and engaged in a soda water manufacturing business, was, on or about the 22nd day of December, 1902, adjudicated a bankrupt, and its property put into the hands of a receiver pending the appointment of a trustee. Thereupon appellee, mortgagee under a chattel mortgage, filed his petition, praying that the receiver be directed to turn over to him all the personal property described in the mortgage which was made to secure notes aggregating the sum of two thousand dollars. The property covered constituted the entire assets of the company. The trustee answered, challenging the validity of the mortgage, and on hearing before the referee, an order was recommended denying the petition; but on exceptions in the District Court, this recommendation was overruled, and the trustee directed to pay to the petitioner the proceeds of the sale, a sale having already taken place. From this order the appeal is prosecuted.

The finding of facts by the referee, about which there is no dispute, is as follows:

Prior to and on March 5th, 1902, the Haas Company was a corporation having a capital stock $18,000.00 divided into 180 shares of $100.00 each, of which Mr. Charles Ziegenhagen was the owner of 119 shares, Mrs. Lena Haas was the owner of 60 shares and Rosina Ziegenhagen was the owner of 1 share, the last named persons being the owners of all the shares of stock and the directors and officers of the corporation. At a meeting of the said directors, on the 5th day of March, 1902, at which all the directors, stockholders and officers were present, the President Charles Ziegenhagen, stated that

Digitized by Google

he had received an offer of $3500.00, for all the capital stock of the Company, payable as follows: $1500.00 cash, balance in 1, 2, 3 and 4 years. After discussing the matter, the other stockholders agreed to assign their stock in blank, and deliver the same to Mr. Ziegenhagen in order that he might make the sale, and it was decided and agreed that Charles Ziegenhagen be authorized to make the sale upon the terms above stated.

The foregoing facts appear from the record of the minutes of the corporation for March 5th, 1902. It also appears from the testimony of the petitioner, Charles Ziegenhagen, and the testimony of Frederick H. Teeple, that the negotiations for the sale of this stock had been going on for some time prior to March 5th, 1902, between Charles Ziegenhagen and Frederick H. Teeple, the latter being the proposed purchaser and that an oral agreement was made prior to the meeting of March 5th, 1902, between Ziegenhagen and Teeple, which provided that Teeple was to purchase the stock and to pay $1500.00 cash and to give notes for the balance.

At the Directors' meeting above referred to, held on March 5th, 1902, Charles Ziegenhagen, Lena Haas and Rosina Ziegenhagen resigned as directors and officers of the corporation, the resignations to take effect March 6th, 1902, at 12:00 o'clock noon. The records of the corporation show what purports to be the minutes of the meeting of the stockholders of the Haas Company, held "pursuant to notice." It is stated that there were present at said meeting, the following named stockholders:

Frederick H. Teeple	178 shares
Frank W. Teeple	1 share
Frederick Matz	1 share.

The record is silent as to the date or day on which said meeting was held. The minutes of this meeting show that the parties named as stockholders, elected themselves as directors of the corporation for the period of one year. The evidence shows that none of the stock was turned over by Ziegenhagen until the 7th day of March, 1902, but the minutes of the corporation show that on the 6th day of March, 1902, a meeting of the new directors last named, was held pursuant to notice. At that meeting, the directors were elected officers of the corporation: Frederick H. Teeple, President and Treasurer, Frederick Matz, Secretary, and a resolution was passed as follows: "That the officers of this Company be and they are hereby authorized to execute a chattel mortgage for and in the name of the Company in favor of Charles Ziegenhagen upon the property of the Company to secure its five notes dated the 7th day of March, A. D. 1902 one—for $250, due in six months after date one for $250, due twelve months after date—one for $250, due eighteen months after date—one for $250, due twenty-three months after date—one for one thousand dollars due two years after date all of said notes to bear interest at the rate of 5% per annum and 7% per annum after maturity." On the 7th of March Ziegenhagen delivered the 180 shares of stock of the corporation to Teeple and the others purporting to be stockholders of the Company and received from Teeple, $1500.00 in cash, and notes and mortgage of the Haas Company for the balance, and a chattel mortgage as set forth in said petition.

On March 7th, when the original stock was turned over by Ziegenhagen, there was no indebtedness against the Haas Company.

I find that, at the time the meeting of March 6th, 1902, was held, Frederick H. Teeple and the others who purported to act as stockholders and directors were not the stockholders of the corporation and did not become stockholders or directors by right until the 7th day of March, 1902.

I further find that the indebtedness to Ziegenhagen was the indebtedness originally of Frederick H. Teeple and that no consideration whatever passed from Ziegenhagen to the Haas Company, a corporation, and that the notes and mortgage in controversy, were wholly without consideration, passing to the Haas Company and that the Haas Company, even through its authorized directors or managers, had no authority or power to make such notes and mortgage and that the petitioner, Ziegenhagen, had knowledge of all these facts when he turned over his stock and took the chattel mortgage and notes.

My conclusion is that the action of the directors and officers in giving the mortgage, was wholly unauthorized and ultra vires and if not absolutely void

Digitized by Google

as to the corporation, the said notes and mortgage should be held as void against the rights of even subsequent creditors.

The only further fact of consequence is that at the time of the giving of the chattel mortgage, the company was free from debt; the creditors represented by the trustee here having become such since the mortgage was put on record.

William E. Oneill, for appellant.

J. G. Grossberg, for appellee.

Before JENKINS, GROSSCUP, and BAKER, Circuit Judges.

GROSSCUP, Circuit Judge, after the foregoing statement of facts, delivered the opinion of the court:

The sole question raised by this record is this: Is it within the lawful power of shareholders of a corporation, to the exclusion of creditors of the corporation, subsequent in point of time to the transaction, to use the notes, and pledge the assets of the corporation, toward paying the shareholders' individual debts contracted in the purchase from others of such shares?

We think not. The corporation, as a statutory person, with power to transact business, invite credit, incur obligations, and to discharge them, is an entity entirely distinct from its individual shareholders, and from their power to transact business, invite credit, incur obligations, and to discharge the same. The shareholders may, it is true, out of the assets of the corporation, declare and pay dividends; or, the affairs of the corporation being wound up, divide among themselves its capital and assets; but dividends mean the division not of capital and assets as such, but of earnings; and a final division of capital and assets means that the corporation will invite no further credit. Under the name of dividends there can be no lawful division of assets and capital that would impair the rights of creditors; and so long as the corporation is a going concern, there can be no lawful division of capital and assets that would diminish the security upon which continuing or future credit will be presumably based.

The notes and mortgage under consideration here are in no sense a dividend; they do not pretend to be a division of earnings. Nor are they a final distribution of capital and assets; the corporation remained a going concern, and invited the subsequent credit which the trustee now represents. Unless shareholders may invade, at will, the capital and assets of the corporation, appropriating them with impunity to the payment of their individual debts, the transaction complained of by the trustee cannot be sustained.

But it is said that the creditors represented by the trustee in this case had knowledge of the existence of the mortgage, and must therefore have extended their credit with notice of the facts. The contention clearly embodies a non sequitur. Knowledge of the presence on the records of the mortgage does not imply notice that out of the capital or assets of the corporation the shareholders were paying their individual debts. The mortgage on file, so far as the creditors knew, may have been executed for corporate purposes, its avails remaining somewhere among the corporate assets.

The order of the District Court is reversed, and the case remand-

Digitized by Google

ed with instructions to enter an order denying the petition of appellee, and to subject the proceeds of the sale, first to the payment of the corporation's just debts.

(131 Fed. 235.)

THE JOHN I. BRADY and THE WILDCROFT (two cases).

(Circuit Court of Appeals, Third Circuit. July 19, 1904.)

Nos. 36, 37.

1. COLLISION—STEAMSHIP AND TUG WITH TOW MEETING—APPROACHING TOO NEAR BEFORE CHANGING COURSE.

A steamship and a tug both *held* in fault for a collision between the ship and barges in tow of the tug, which occurred on the Delaware river in the night, on the ground that, although the two vessels saw each other when a mile apart, each held its course and approached head on until they were so close together that the danger of collision between them was imminent, and a confusion of signals resulted, which brought about the collision; the steamship also for failure to maintain an efficient lookout; and the tug for being on the left-hand side of the channel, and signaling her intention to pass on the starboard of the steamship, in violation of the rules; the evidence being insufficient to establish a custom which justified her in keeping that side of the channel in passing up the river.

Appeals from the District Court of the United States for the Eastern District of Pennsylvania.

For opinion below, see 115 Fed. 204.

J. Parker Kirlin and Henry R. Edmunds, for appellants.

Curtis Tilton, for appellee.

Before ACHESON, DALLAS, and GRAY, Circuit Judges.

GRAY, Circuit Judge. These appeals were heard together, inasmuch as the cases below depended upon the same facts and were heard upon the same depositions.

The libels were filed severally by James W. Levins, master of the schooner barge "Bertie and Maud," and by the P. Dougherty Company, owner of the barge "Calvert," against the steamship "Wildcroft" and the steam tug "John I. Brady," to recover damages growing out of the collision between the "Wildcroft" and the appellees' barges, while in tow of the "John I. Brady." The court below found the steamship and tug in fault, dividing the damages between them, and entered decrees accordingly. From these decrees, the appellants have taken these appeals.

The leading facts of the case, as disclosed by the record, are these:

The tug "John I. Brady," with a tow of four heavily laden barges, was proceeding up the Delaware river, between 8 and 9 o'clock p. m. of March 19, 1901. The tow was made up at Delaware City. There were four barges in two tiers, "two in each tier, close up," the distance between the two tiers being 10 feet or so, just enough to clear the rudders of the front tier. The schooner barge "Bertie and Maud" was on the port side, and the barge "Calvert" on the starboard side of the first tier, the barges "Provost" and "Experiment" being in the second tier. The hawser from the tug to the first tier of boats was about 125

Digitized by Google

feet in length, and the length of the tug 72 feet, the whole tow being about 600 feet in length. The regulation lights of the tug and tow were properly set and burning, there being a red light on the port side of the "Bertie and Maud" and a green light on the starboard side of the "Calvert," the starboard and the port sides of the two barges respectively being without lights. While the tow so made up was proceeding up the river, above Edgemoor, upon the western side of the channel, with lookouts properly stationed, the steamer "Wildcroft" was observed coming down the river, more than a mile off, some of the witnesses on the tug saying that she bore somewhat on the starboard bow. The wind was blowing from the eastward, and strong. Those on the tug testified that it was usual for tows like the one in question to keep on the western side of the channel. The testimony of those on the tug is, that about half a mile distant, two whistles were blown by the tug, to indicate that she was going to the westward, and intended to pass the steamer on her starboard side. The pilot on the steamer says that he first observed the tug and tow a little on his port bow; that he gave them one whistle, to indicate that he would pass to the port side of the tow. He says, also, that the "Brady" at that time was showing a red light, which would indicate that she had not yet put her helm to starboard, to pass to the westward of the steamer. The witnesses on the "Wildcroft" state that they only heard the blast of one whistle from the tug, and the testimony on the part of the tug is, that after hearing the one whistle from the steamship, they repeated the blast of two whistles from the tug, indicating that she persisted in her intention to pass to the westward.

We may here quote from the findings of fact, and opinion of the learned judge of the court below:

"The steamship and tug approached each other nearly head on, both being westward of the channel course. Each vessel had a proper lookout and each saw the other more than a mile away. If the proper maneuvers had been executed, I have no doubt that a collision would have been avoided, for there was abundant room and depth of water in the channel for both vessels, and if they had taken due precautions the accident would not have happened. A strong wind was blowing from the northeast, and it may be that this may have had some part in preventing the steamship from hearing the tug's signals. As usual, it is impossible to reconcile the contradictory accounts of the witnesses that were called by the respective vessels, and I shall not attempt to discuss the two theories in detail. I do not accept either of them as a whole, for it seems clear to me that the collision can be explained much more simply and more probably than by following either as if it were completely true. The tug and her tow were certainly upon what would ordinarily be the wrong side of the channel, and although there seems to be a more or less prevailing custom for tugs with their tows to take the western side of the river at this point, I do not think the custom is sufficiently established to furnish an adequate excuse. Unquestionably, if the tug upon this occasion had been upon the right hand side of the channel, there would have been no collision, and upon that side, I think, she should have been. It was a fault in the tug to have been in the wrong place; but aside from this, I think it was plain that each vessel was to blame for holding a nearly head on course too long. The evidence satisfies me that each held this course until they came so near each other that unless signals were precisely and promptly made and obeyed, there was great danger of collision. This, as it seems to me, is the true explanation of what happened. In the darkness of the night they came closer to each other than either vessel supposed the distance to be; and when the true situation was recognized and each realized the unexpected peril, a not unnatural confusion

Digitized by Google

of signals occurred, neither vessel being quite certain what was best to be done or what the real intention of the other might be. There is the usual conflict of testimony concerning the color of the lights that could be seen from the respective vessels, and I have little doubt that toward the last, when it was impossible to avoid the collision, the conflict may perhaps be explained by the fact that each vessel changed its course in the hope of escaping the impending disaster. At this stage of the affair it would be useless to apportion the blame, if accurate apportionment be possible. The initial fault, as it seems to me, a fault for which both vessels are equally liable, was in approaching each other head on too close for safety. Apparently, each vessel either expected the other to give way, or was confident that the passing could be safely accomplished on the course that each was holding—the result being that when the final effort to pass was made, there were mistakes on both sides, in consequence of which the two barges were injured. Immediately before the collision took place, the tug, by a desperate sheer to starboard, barely escaped the steamship, which broke the hawser leading from the tug to the 'Bertie and Maud,' and struck its starboard bow against the port side of the barge's stem, forced its way between the two barges, breaking several of the breast lines by which they were attached to each other, and struck the port bow of the 'Calvert,' doing injury to that boat also. Some of the witnesses for the steamship testified that her way had been stopped before the collision took place, and that she was actually going astern; but considering the extent of the injury that she inflicted, this testimony seems to me to be unreliable. For the reasons given, I am of opinion that both the tug and the steamship were at fault, and that each of the barges is entitled to recover from both. As I understand, it is not seriously contended that the barges were guilty of negligence; but if such a position is really taken, I have no difficulty in finding that they were free from blame."

We agree with the learned judge of the court below, that the testimony shows that the steamship and the tow were approaching each other head on, or nearly so, and that it was the duty of the tug to have observed the directions of article 18, rule 1, of the rules of the supervising inspectors (Act June 7, 1897, c. 4, § 1, 30 Stat. 100 [U. S. Comp. St. 1901, p. 2881]), requiring steam vessels so approaching to pass each other port to port, and that the contention on behalf of the tug, that a custom existed, that tows of that kind should keep on the westward side of the channel under such circumstances, was not sufficiently sustained by the testimony to justify the tug in disregarding the directions of article 18, above referred to. We think, also, that the evidence shows that the steamer held on her head to head course too long before indicating, by proper signals, her intention as to passing, and persisted unreasonably in her intention to pass to the westward, after being made aware of the tug's intention of doing the same.

We think, also, the evidence shows that no sufficient lookout, as required by the inspectors' rules, was maintained on the bow of the steamship. The carpenter, who testifies that he was on the bow of the "Wildcroft" at and before the time of the collision, does not state that he was stationed as a lookout, but was doing work that necessarily distracted his attention.

On the whole, we think the case has been properly disposed of by the court below, whose decree is accordingly affirmed.

Digitized by Google

(131 Fed. 238.)

BURNS v. BURNS.

(Circuit Court of Appeals, Second Circuit. May 26, 1904.)

No. 211.

1. FEDERAL COURTS—APPEAL—OPINION OF TRIAL JUDGE—PRESUMPTIONS.
The opinion of a trial judge on conflicting evidence will be presumed correct on appeal.

2. CARRIERS—CONTRACT OF SHIPMENT—DEMURRAGE—BILL OF LADING.
Where libelant contracted to transport coal for respondent consignee, who was the owner, under a verbal agreement as to the terms of freight, and that the demurrage rate should be $6 per day, and libelant did not call respondent's attention to the fact that the shipper had inserted in the bill of lading a provision for demurrage at the rate of 6 cents a ton of cargo for each day's detention, until after the coal had been delivered, and respondent did not discover such change until delivery had been completed, the shipper having no authority to make a new contract for respondent, the latter was liable for the demurrage only at the rate specified in the original contract.

Appeal from the District Court of the United States for the Southern District of New York.

For opinion below, see 125 Fed. 432.

Martin A. Ryan, for appellant.

F. W. Park, for appellee.

Before WALLACE, LACOMBE, and COXE, Circuit Judges.

WALLACE, Circuit Judge. It is not disputed that the libelant was entitled to recover demurrage for 20 days for the detention of his canal boat by the respondent, and the only question is whether he was entitled to recover at the rate of 6 cents per ton per day (which would be $18.42 per day), as claimed by him, or at the rate of $6 per day, as claimed by the respondent.

The respondent engaged the libelant's canal boat to go to St. George, Staten Island, and take on a cargo of coal from Hamilton & Co., for transportation and delivery to the respondent at New York City.

Hamilton & Co. gave a delivery order foı the cargo upon the Niver Coal Company, at St. George; the master of the canal boat delivered his order to the Niver Coal Company, and the cargo was put on board; and thereafter the master signed bills of lading in triplicate, presented to him by the Niver Coal Company, leaving two with them, and retaining one himself. In this instrument the Niver Coal Company was named as the shipper of the cargo, the respondent was named as the consignee, the quantity of coal was stated, the freight was stated as "agreed upon," and the rate of demurrage was fixed at six cents per ton of cargo for each day's detention. Upon giving notice of his boat's arrival at New York to the respondent, the master delivered his bill of lading to the respondent, and the respondent retained it without examination and without objection. After the cargo had been discharged the libelant claimed demurrage at the rate stated in the bill of lading. The respondent claims that upon engaging the canal boat

¶ 2. Demurrage, see notes to Harrison v. Smith, 14 C. C. A. 657; Randall v. Sprague, 21 C. C. A. 337; Hagerman v. Norton, 46 C. C. A. 4.

Digitized by Google

he made a verbal agreement with the libelant not only as to the terms of the freight, but also as to the demurrage, and that the demurrage rate was to be $6 for each day's detention. The court below, upon conflicting testimony, found this contention in favor of the respondent. His opinion is presumably correct, and, upon reading the proofs, we are fully satisfied with his finding.

It is urged for the appellant that by receiving the bill of lading after accepting the cargo the respondent assented to the terms of the bill of lading, including the demurrage rate. Ordinarily, when goods are delivered to a carrier for transportation, and a bill of lading is delivered to the shipper, the latter is bound to examine it and ascertain its contents, and, if he accepts it without objection, he is bound by its terms, and resort cannot be had to prior parol negotiations to vary it, nor can he set up ignorance of its contents. On the other hand, if the goods are accepted for transportation by the carrier without any receipt or bill of lading being issued, the subsequent delivery to and acceptance by the shipper or his agent of such an instrument will not constitute a binding contract, for in such cases there is no consideration for the subsequent agreement. Perry v. Thompson, 98 Mass. 249; Bostwick v. Balt., etc., R. R. Co., 45 N. Y. 712. Whether the fact that the bill of lading in the present case was prepared by the Niver Coal Company is of any consequence, in view of its not having been delivered until the cargo had been accepted by the carrier, further than as evidencing the assent of that company to the terms of demurrage, need not be considered. That company had no authority to make a new contract for the respondent, and the real question is whether what subsequently took place between the master and the respondent conclusively established a new contract between the libelant, whose agent the master was, and the respondent. Doubtless the consignee who receives the goods under a bill of lading is ordinarily liable to pay the freight or demurrage stipulated for in the instrument, although payment may not have been exacted before the delivery of the goods. But we think this rule does not apply where he is the owner of the goods, and they have been transported under a different contract with him by the carrier, and the goods are delivered without any new understanding between him and the carrier. The case of Old Colony R. R. v. Wilder, 137 Mass. 536, is in point. In that case the question was whether the consignee, who had bought goods upon which the consignor was to pay the freight, accepted the goods marked so as to make the freight payable on delivery; and it was held that, as there was no evidence of a demand of the freight by the carrier before delivery, the acceptance was merely evidence, but not conclusive evidence, of a promise by the consignee to pay the freight. The court treated the case as though the goods had been accepted under a bill of lading by the terms of which the freight was payable by the consignee, and said that if the defendant accepted the goods, knowing the carrier looked to him for the freight, the law would imply a promise to pay it, but, if he had not such knowledge, no promise would be implied. In the present case the master knew, or was bound to know, that the Niver Coal Company had inserted in the bill of lading terms with respect to the demurrage which the respondent had not authorized; but he did not

Digitized by Google

call respondent's attention to the change until after he had delivered the coal, and the respondent did not discover the change until the delivery had been completed. There was marked carelessness upon the part of some employé of the respondent, as well as of some employé of the Niver Coal Company, and we are unable to doubt that the libelant availed himself of the circumstance to put forward a claim which he knew was without merit.

The decree is affirmed, with costs.

(129 Fed. 522.)

CHICAGO, M. & ST. P. RY. CO. v. VOELKER.

(Circuit Court of Appeals, Eighth Circuit. March 26, 1904.)

No. 1,842.

1. RAILROADS—AUTOMATIC COUPLERS—STATUTES—CONSTRUCTION.

Act March 2, 1893, c. 196, 27 Stat. 531 [3 U. S. Comp. St. 1901, p. 3174], provides that after January 1, 1898, it shall be unlawful for any common carrier, engaged in interstate commerce by railroad, to haul or permit to be hauled or used on its line any car used in moving interstate traffic not equipped with couplers "coupling automatically by impact, and which can be uncoupled without the necessity of men going between the ends of the cars." Code Iowa 1897, §§ 2097, 2080, declares that after the same date no corporation operating a railroad shall have upon such railroad in that state any car that is not equipped with "automatic couplers so constructed as to enable any person to couple or uncouple them without going between them." *Held*, that the test to be applied by both of said acts, viz., whether the person operating the coupler is required to go between the ends of the cars, applies to the act of coupling as well as that of uncoupling, and that the act of Congress forbids the use of a coupler which requires the operator to go between the ends of the cars to prepare the coupler for the impact.

2. ACT OF COUPLING CARS.

The preparation of the coupler for the impact is not distinct from the act of coupling. The preparation and the impact are connected and indispensable parts of the larger act, which is regulated by the statute, and the performance of which is intended to be relieved from unnecessary risk and danger.

3. STATUTES—CONSTRUCTION.

Statutes, the purpose of which is the protection of the lives and limbs of men, are so construed as to prevent the mischief and advance the remedy, so far as the words fairly permit.

4. STATUTES—INTERPRETATION.

Punctuation is a minor, and not a controlling, element in interpretation, and courts will disregard the punctuation of a statute, or repunctuate it, if need be, to give effect to what otherwise appears to be its purpose and true meaning.

5. DEFECTIVE CAR COUPLERS—ACTIONABLE NEGLIGENCE.

Where an automatic car coupler had been permitted to become and remain defective so that the lever would not lift the pin from the socket and the knuckle could not be drawn open by leaning toward the coupler and using one hand, but required the presence of the operator's entire body between the ends of the cars and between the drawbars, and the use of both of his hands, such coupler did not satisfy Act March 2, 1893, c. 196, 27 Stat. 531 [3 U. S. Comp. St. 1901, p. 3174], or Code Iowa 1897, §§ 2097, 2080, requiring the use of automatic car couplers not requir-

---

¶ 4. See note at end of case.

Digitized by Google

ing the presence of any person between the ends of the cars in order to operate the same; and the use of such defective coupler constituted actionable negligence.

6. INTERSTATE TRAFFIC—TEMPORARY SUSPENSION OF TRANSIT.

A shipment, originating in one state and being moved to a point in another state, is impressed with the character of interstate traffic, which will follow the shipment until the actual transit ceases. A car used in moving such shipment remains subject to Act March 2, 1893, c. 196, 27 Stat. 531 [U. S. Comp. St. 1901, p. 3174], until its use in moving the shipment is ended, notwithstanding the transit may be temporarily, but not indefinitely, suspended; and this, whether the ultimate destination of the shipment be near to or remote from the point of suspension.

7. PETITION—OBJECTIONS AT TRIAL—VARIANCE—APPEAL.

Where, in an action for wrongful death of a switchman by reason of an alleged defective coupler attached to a car used in moving traffic, defendant offered no objection to evidence which, without conflict, established the interstate character of the commerce in which defendant was engaged and of the traffic being moved by the car in question, and in excepting to the instructions applying Act March 2, 1893, c. 196, 27 Stat. 531 [U. S. Comp. St. 1901, p. 3174], to the case, defendant did not place its exceptions on the ground that the petition did not state a case arising within interstate commerce, such objection was not available on appeal.

8. AUTOMATIC COUPLERS—WHERE DEFECTIVE NO ASSUMPTION OF RISK.

Under Act Cong. March 2, 1893, c. 196, § 8, 27 Stat. 532 [3 U. S. Comp. St. 1901, p. 3176] providing that any employé of an interstate carrier who may be injured by any car in use contrary to the provisions requiring the use of automatic couplers shall not be deemed thereby to have assumed the risk, though he continue in the employment of such carrier after the unlawful use of such car, etc., has been brought to his knowledge, a switchman engaged in handling a freight car having a defective coupler, on a track principally used for handling freight trains, though sometimes used to handle cars in need of repairs, did not assume the risk arising from the defect in the coupler; the car not having been marked or isolated as one in bad repair, and its movement at the time not being with a view to its isolation or repair.

9. CONCURRING ACTS OF NEGLIGENCE—INSTRUCTIONS.

Where a right of recovery was rested upon each of two separate and concurring acts of negligence, it was the right of each party to have the jury correctly instructed respecting each act of negligence, the same as if the right of recovery rested upon it alone; and, if there was material error in the instructions given or refused respecting either charge of negligence, the verdict, where general, cannot stand.

10. CUSTOM TO KICK CARS WITHOUT NOTICE TO FIELDMAN—ASSUMPTION OF RISK.

Where it was the general and uniform custom in a railroad yard to kick cars down to a fieldman without giving him notice or warning, a fieldman who was aware of such custom and remained in that service assumed the risk of injury arising from the observance of the custom.

In Error to the Circuit Court of the United States for the Northern District of Iowa.

For opinion below, see 116 Fed. 867.

This was an action to recover damages for the death of Emil Voelker, occurring while he was engaged in coupling cars at Dubuque, Iowa, in the service of the railway company. After describing defendant company as a Wisconsin corporation "engaged in operating a line of railway through the

---

¶ 8. Assumption of risks incident to employment, see note to Chesapeake & O. R. Co. v. Hennessey, 38 C. C. A. 314.

¶ 10. See Master and Servant, vol. 34, Cent. Dig. § 596.

Digitized by Google

state of Iowa," and having upon one of its yard tracks at Dubuque "a loaded car, which was to form a part of a train then being made up * * * for early movement," and after describing Voelker as a car coupler and fieldman in the switching crew which was making up this train, the petition charged two acts of negligence on the part of the company as proximate causes of Voelker's death: (1) "Defendant negligently permitted the coupler on the northerly end of said car to become and remain inoperative and defective in that the link connecting the lever and the pin was loose, broken, and disconnected, so that the pin and coupler could not be operated by means of the lever, and the said coupler was so old, worn, and rickety that the pin could not be raised because of the tumbler pressing and resting against the frame of the coupler, thus making it necessary, in order to operate the coupler, to go between the cars, insert the hand in the coupler, push the tumbler away from the frame, and then raise the tumbler and pull the knuckle open. * * * Defendant knew, or by the exercise of ordinary diligence could and should have known, of the defective and inoperative condition of the coupler aforesaid, before the death of said Voelker, and in time to have remedied the same." (2) "The general practice recognized and known by defendant, then and many years prior thereto in force, was for car couplers to go between the cars and open the knuckles whenever the same could not be operated by means of the lever." Voelker accordingly went between this and another car, which were separated a few feet, "to open the knuckle, in order that the coupling might be made by impact; and while thus engaged, and unaware of the danger to which he was exposed, said switching crew, while acting within the scope of their employment, and knowing that said Emil Voelker went between said cars to couple the same, negligently caused two or more other cars to be kicked with great force * * * against the cars between which said Emil Voelker was thus occupied, * * * without signal from him, although the general practice then and long prior thereto required that said cars be not moved while he was thus occupied between the cars, without signal from him."

Defendant's answer denied the statements of the petition other than those relating to the citizenship of the parties, charged that Voelker's death was the result of his own contributory negligence, and alleged that the track where he was injured was prior to and all during his service used to set out and handle thereon cars having some defect in them and needing repairs, as well as other cars not defective; that this was known to him, or could have been ascertained by the exercise of ordinary care; that with this knowledge or means of knowledge he remained in the company's service, and continued to work on that track without objection or complaint, and therefore assumed the risk of meeting and working with defective cars at that place.

At the trial these facts were established: The car in question was loaded with coal, and was brought by defendant over its line of railroad from a station thereon in the state of Illinois, and reached defendant's yards at Dubuque, Iowa, about 5 o'clock in the afternoon. About 8 o'clock the next morning, when the injury to Voelker occurred, the car was on a freight track principally or largely used in receiving incoming freight trains and making up outgoing freight trains. A switching crew, in which Voelker was acting as car coupler and fieldman, was then engaged in shifting about and coupling this coal car and several other loaded cars. While Voelker was between the coal car and another car separated by a distance of about 10 feet, and was engaged in adjusting the coupler on the coal car so that it would couple automatically upon impact, the two cars came together, catching him between the drawbars, and crushed him to death. He was 29 years old, and had been in defendant's service as brakeman and switchman 8 years. In respect of several other matters the evidence was conflicting. The jury returned a verdict for plaintiff, on which judgment was rendered, to reverse which the railroad company prosecutes this writ of error.

W. J. Knight and H. H. Field, for plaintiff in error.

H. C. Kenline and J. J. McCarthy (R. P. Roedell, on the brief), for defendant in error.

George Crane, Asst. U. S. Atty., amicus curiæ.

Digitized by Google

Before SANBORN, THAYER, and VAN DEVANTER, Circuit Judges.

VAN DEVANTER, Circuit Judge, after stating the case as above, delivered the opinion of the court.

It is entirely clear that the trial proceeded upon the theory that plaintiff's petition charged two acts of negligence on the part of the railway company as proximate causes of Voelker's death: First, permitting the coupler upon the coal car to become inoperative and defective; and, second, kicking or sending other cars against the cars between which Voelker was engaged without a signal from him, and contrary to a general and established practice. Each party, without objection from the other, introduced evidence bearing directly upon each charge of negligence, and not otherwise relevant to the issues. The court also instructed the jury upon this theory. The contention on behalf of the railway company that the case was tried upon the theory that the petition charged the negligent kicking or sending of other cars against those between which Voelker was engaged as the sole proximate cause of the injury is not supported by the record, but is refuted by it. The evidence relating to the condition of the coupler on the coal car was conflicting, but substantial evidence was produced by plaintiff to the effect that it was equipped with a coupler known as "Hein No. 1," which originally, and when in good condition, could be prepared for coupling and would couple automatically by impact, without the necessity of any one going between the ends of the cars in the sense of putting the body entirely between them, but that at the time of the injury to Voelker this coupler had become so defective and inoperative that when the knuckle thereof was closed it was necessary for some one to go completely between the cars to open it, and thereby prepare the coupler for the impact; that this condition of the coupler had existed for such a length of time as to charge the railway company with notice; and that at the time of the injury the knuckle was closed, and, in the discharge of his duty as a switchman, Voelker was entirely between the ends of the cars engaged in preparing the coupler for the impact by opening the knuckle, a task made difficult by the defective and inoperative condition of the coupler. In view of this evidence, and the established facts shown in the statement before made, the court, in substance, said to the jury that it would be assumed that they would find from the evidence that defendant was a common carrier engaged in interstate commerce by railroad, and that the coal car was being used by defendant on its line of railroad in moving interstate traffic, and then instructed them that the branch of the case resting upon the condition of the coupler was controlled by the act of Congress of March 2, 1893, c. 196, 27 Stat. 531, 3 U. S. Comp. St. 1901, p. 3174, relating to safety appliances to be provided and maintained by such common carriers. This is assigned as error, and in support of the assignment it is urged: First. That the act of Congress does not forbid the use of a car having an automatic coupler "to prepare which for the impact" it is necessary to go between the ends of the cars, but is satisfied with a coupler which, when so prepared, will couple automatically by impact; that

Digitized by Google

the terms of the congressional act are such "that the test of a man going between the ends of the cars is applied to uncoupling only, and that no such test is applied to coupling"; and that plaintiff's petition and the evidence show Voelker "was not attempting to make a coupling," but was simply opening the knuckle of the coupler, the defect in which, if it were defective, did not prevent it from coupling automatically by impact when open, but merely rendered it more difficult to open the knuckle or prepare the coupler for the impact. Second. That there is no evidence but that the car had reached its destination, or that it was intended to be thereafter used in moving interstate traffic. And, third, that plaintiff's petition does not allege that defendant was a common carrier engaged in interstate commerce by railroad, or that the coal car was being used on defendant's line of railroad in moving interstate traffic, and therefore does not state a case controlled by the act of Congress.

The first section of the safety appliance act of Congress of March 2, 1893, requires "every common carrier engaged in interstate commerce by railroad" to equip its engines and trains used in moving interstate traffic with a system of train brakes which will enable the engineer to control the speed of the train. The second section declares:

> "That on and after the first day of January, eighteen hundred and ninety-eight, it shall be unlawful for any such common carrier to haul or permit to be hauled or used on its line any car used in moving interstate traffic not equipped with couplers coupling automatically by impact, and which can be uncoupled without the necessity of men going between the ends of the cars."

A statute of Iowa enacted April 6, 1892 (sections 2097, 2080, Code 1897), declares:

> "After January 1, 1898, no corporation, company or person, operating a railroad, or any transportation company using or leasing cars, shall have upon such railroad in this state any car that is not equipped with such safety automatic coupler," namely: "with automatic couplers so constructed as to enable any person to couple or uncouple them without going between them."

While there is some difference in the words by which these statutes describe the type of coupler with which each requires cars coming within its operation to be equipped, we think both apply the test of whether the person operating the coupler is required to go between the ends of the cars to the act of coupling as well as to that of uncoupling. The risks and dangers which attended the old link and pin system when couplings and uncouplings were effected by going between the cars were such a menace to the lives and limbs of those employed in that branch of the railroad service, and these risks and dangers inhered so largely in the act of going between the cars, whether in the act of coupling or uncoupling, that there can be no doubt of the purpose of the congressional enactment as well as of that of the state to obviate and prevent this act of exposure, which the invention and use of automatic couplers had demonstrated to be wholly, or at least largely, unnecessary. The state statute plainly and without uncertainty calls for "automatic couplers so constructed as to enable any person to couple or uncouple them without going between them." If there be uncertainty in the congressional act, it is obviated by merely inserting a comma after the word "uncoupled" in that portion of the act which

Digitized by Google

calls for "couplers coupling automatically by impact, and which can be uncoupled without the necessity of men going between the ends of the cars." The concluding phrase then literally applies to both the coupling and uncoupling. Punctuation is a minor, and not a controlling, element in interpretation, and courts will disregard the punctuation of a statute, or re-punctuate it, if need be, to give effect to what otherwise appears to be its purpose and true meaning. Hammock v. Loan & Trust Co., 105 U. S. 77, 84, 26 L. Ed. 1111; United States v. Lacher, 134 U. S. 624, 628, 10 Sup. Ct. 625, 33 L. Ed. 1080; United States v. Oregon, etc., Railroad, 164 U. S. 526, 541, 17 Sup. Ct. 165, 41 L. Ed. 541; Ford v. Delta, etc., Co., 164 U. S. 662, 674, 17 Sup. Ct. 230, 41 L. Ed. 590; Stephens v. Cherokee Nation, 174 U. S. 445, 480, 19 Sup. Ct. 722, 43 L. Ed. 1041; Sutherland, Statutory Construction, § 232. Obviously, the purpose of this statute is the protection of the lives and limbs of men, and such statutes, when the words fairly permit, are so construed as to prevent the mischief and advance the remedy. The mischief to be prevented rested quite as much in the act of coupling as in the act of uncoupling. Science had offered, and practical use had approved, a remedy applicable not alone to the act of uncoupling, but also to that of coupling. The two statutes, federal and state, seem to have been enacted in pursuance of a common purpose to afford a remedy as broad as the mischief, and to remove the source or cause of the latter through the compulsory adoption and use of a new system of coupling and uncoupling which dispensed with the necessity of any one going between, or at least entirely between, the cars.

The contention that the preparation of the coupler for the impact is distinct from the act of coupling is a mistaken attempt to separate a part of an act from the whole. The preparation of the coupler and the impact are not isolated acts, but connected and indispensable parts of the larger act, which is regulated by these statutes, and the performance of which is intended to be relieved of unnecessary risk and danger.

Counsel for the railroad company deny, and opposing counsel affirm, the existence at the time of the enactment of this legislation of any automatic coupler which could be prepared for the impact or coupling by manipulating a lever or otherwise, without placing any portion of the body between the ends of the cars. The real situation then existing, if shown by evidence produced at the trial, or by something of which judicial notice could be taken, might have an important bearing upon the true meaning of these statutes in respect of the extent to which it was intended to dispense with the necessity of going between the cars; but no evidence upon this point was presented by either party, and counsel have not attempted to call our attention to anything which sustains either of their opposing assertions. An examination of public documents, possibly within the range of judicial notice, tends to confirm the assertion of counsel for plaintiff that such couplers were in existence and in actual use at that time, but we think a determination of this question is not necessary to a decision of this case. There is no doubt under the evidence but that this "Hein No. 1" coupler, when in reasonably good condition, is operated in

Digitized by Google

this manner: The switchman, by depressing with one hand a lever at the corner of the car, lifts the pin from the socket in the coupler, and, leaning toward the coupler, readily draws the knuckle open with the other hand, an act which is performed in a brief space of time, with slight exertion, and without placing the body completely between the ends of the cars. Plaintiff's petition complains, not of the type of coupler with which this car was equipped, but that defendant negligently permitted it to become and remain so defective and out of repair that it could not be operated in the usual manner; that the pin could not be lifted by means of the lever; and that it was necessary "to go between the cars, insert the hand in the coupler, push the tumbler away from the frame, and then raise the tumbler and pull the knuckle open." In their brief, counsel for plaintiff concede that, if the coupler is operative and in good condition, "this is a reasonably safe method of making the coupling," and that whether this coupler, when in such condition, fully conforms to the congressional or state statute "is not a vital question in this case." For the present purposes it will therefore be assumed—a decision upon the question being unnecessary—that this coupler, if in reasonably good condition, satisfied both statutes. But the evidence produced by plaintiff tended to show that the coupler was not in reasonably good condition; that it had been permitted to become and remain defective and inoperative; that the lever would not lift the pin from the socket; that the knuckle could not be drawn open by leaning toward the coupler and using one hand, but to open it required the presence between the ends of the cars, and between the drawbars, of the entire body of the person attempting it, and also the use of both hands, considerable strength, and more than the usual time; all of which greatly increased the risk and added to the danger of the undertaking. If this was the true condition of the coupler at the time of the injury, it did not satisfy either statute, and its use was violative of one or the other of them, and constituted actionable negligence.

Whether the violation was of the congressional act or of the state statute depended upon whether defendant was a common carrier engaged in interstate commerce by railroad, and was using the car in question on its line of railroad in moving interstate traffic. We think there was evidence that the carriage or movement of the coal with which the car in question was loaded had not terminated, and that the coal was still actually in transit. The evidence contains no suggestion that the car had reached the end of its journey, or that it was to remain indefinitely or for any considerable time on the track where it was at the time of the injury, or that the coal was to be unloaded there. The inference to be reasonably drawn from the evidence is that the car was then about to actively continue the journey toward the ultimate destination of the coal which it was carrying. Whether that was near by or remote is not material, because the shipment had originated in another state, and was already impressed with the character of interstate traffic, which would follow it at least until the actual transit ceased. Defendant was clearly shown to be a common carrier engaged in interstate commerce by railroad, and to be using the car mentioned on its line of railroad in moving interstate traffic,

Digitized by Google

and therefore the branch of the case relating to the condition of the coupler is controlled by the act of Congress, and not by the state statute. Plaintiff's petition states clearly enough that defendant was a common carrier engaged in commerce by railroad, and that it was using this car on its line of railroad in moving traffic. As stated, the case falls short of coming within the act of Congress only in that the petition does not allege the interstate character of the commerce in which defendant was engaged, or of the traffic which the car was moving. But, whether the case stated is controlled by the act of Congress or the state statute, it is one of actionable negligence, the right and measure of recovery for which are the same in either event, and are to be ascertained and enforced by the same rules. Other allegations bring the case equally within the jurisdiction of the Circuit Court, whether the violation was of one statute or of the other. Defendant offered no objection to the evidence, which without conflict established, as before shown, the interstate character of the commerce in which defendant was engaged, and of the traffic being moved by the car mentioned; nor does it appear that in excepting to the instructions by which the court applied the act of Congress to this branch of the case, defendant put its exception upon the ground that the petition did not state a case arising in interstate commerce. Plaintiff was entitled to be seasonably apprised of the objection if it were intended to be relied upon, and doubtless the court would have permitted an amendment of the petition, as it is manifest the defendant was not misled or surprised by the variance. Under the circumstances the petition may well be considered as having been amended to conform to the facts proved. Code Iowa 1897, §§ 3597, 3600; Rev. St. U. S. § 954 [U. S. Comp. St. 1901, p. 696]; Roberts v. Graham, 6 Wall. 578, 581, 18 L. Ed. 791; Nashua Savings Bank v. Anglo-American, etc., Co., 189 U. S. 221, 231, 23 Sup. Ct. 517, 47 L. Ed. 782; Haley v. Kilpatrick, 44 C. C. A. 102, 104, 104 Fed. 647. We are of opinion that no error was committed in instructing the jury that the branch of the case resting upon the condition of the coupler was controlled by the act of Congress.

It is assigned as error that the court, in effect, instructed the jury to disregard the defense of assumption of risk based upon the allegation, in defendant's answer, that the track on which the coal car was standing was used "to set out and handle thereon * * * cars having some defect in them and needing repairs, as well as other cars not defective," and that this was known to Voelker, or could have been ascertained by him by the exercise of ordinary care. The allegation is not that this was a hospital track, specially designed or used for isolating or holding cars in need of repair or for repairing them, or that the car in question was being moved with a view to its isolation or repair. Section 8 of the controlling act of Congress declares:

"That any employee of any such common carrier who may be injured by any locomotive, car, or train in use contrary to the provision of this act shall not be deemed thereby to have assumed the risk thereby occasioned, although continuing in the employment of such carrier after the unlawful use of such locomotive, car, or train had been brought to his knowledge."

Digitized by Google

The evidence, without any substantial conflict, showed that this track was principally used in actively handling freight trains and freight cars; that incoming trains were received thereon and the cars distributed therefrom; that outgoing trains were made up thereon and dispatched therefrom; that incoming trains sometimes brought thereon cars in need of repair, and in some instances such cars were temporarily transferred thereto from other tracks; that there was in the yards at Dubuque a hospital track specially designed and used for isolating and holding cars in need of repair; that the practice was to inspect the cars of incoming trains, and to mark those found in need of repair, commonly termed "bad order" cars, in such manner as to indicate their condition, preparatory to their proper disposition, and as a warning to those handling them; and that at the time of the injury this car had not been marked or isolated as in bad order. There was no evidence that Voelker was engaged in moving the car as one in bad order, with a view to its isolation or repair. Of this evidence it is sufficient to say that, working under such circumstances with a car in use contrary to the congressional act does not, in the presence of section 8, amount to an assumption of the risk arising therefrom, and the court very properly instructed the jury to that effect.

As shown in the statement before made, plaintiff's petition rested the right of recovery upon two acts of negligence on the part of defendant, and, as stated in the brief of counsel for plaintiff: "The case was tried to the jury upon the theory that the injury was the result of two concurring or proximate causes: (1) The defective and nonautomatic coupler; and (2) the negligent kicking down of the second cut of cars." It was therefore the right of each party to have the jury correctly instructed respecting each of the claimed acts of negligence the same as if the right of recovery rested upon it alone; and, if there was material error in the instructions given or refused respecting either charge of negligence, the verdict, being general, cannot stand.

The principal allegations constituting plaintiff's second charge of negligence were: First, the existence of a practice in defendant's yards at Dubuque, long recognized by defendant, and amounting to a general custom, requiring, when a car coupler, also called "fieldman," is engaged between two cars in preparing them for coupling, that other cars be not moved against those between which he is engaged without a signal from him; and, second, the kicking or sending of other cars forcibly against those between which Voelker was engaged, without a signal from him, and with knowledge of his exposed position between the cars. The evidence shows that the coal car before mentioned was standing on a freight track distant about 800 feet from a switch which connected it with the main track; that the switching crew, with an engine and 12 or 13 cars, approached the switch from along the main track, and there kicked 8 or 9 of the cars onto the freight track with sufficient force to send them along that track to or near the coal car; that Voelker accompanied the moving cars, riding thereon, for the purpose of controlling their speed and of effecting a coupling between them and the coal car; that the switching crew then kicked 2 of the remaining cars down the main track, then kicked the other 2 cars onto the freight track with sufficient

Digitized by Google

force to send them along that track to or near the cars first kicked thereon, and then followed the 2 cars sent down the main track. It was the theory of plaintiff's evidence that the cars last kicked onto the freight track moved along that track to the point reached by the cars first kicked thereon, and struck them with such force as to move them against the standing cars and cause the injury to Voelker, who was then between the cars, and engaged in opening the knuckle of the coupler on the coal car, as before stated. Whether the second set of cars actually reached those first sent along the freight track was, however, the subject of conflicting evidence, as was also Voelker's knowledge of the intention to send a second set of cars along that track. The switching crew did not know of Voelker's position between the cars, or that there was occasion for him to go between them. He gave no signal to the switching crew indicating that there was occasion for him to go between the cars, and no effort was made by them to apprise him of the approach of the second set of cars, excepting as it was claimed that he was informed, before leaving the switch, of the intended sending of a second set of cars along the freight track. While the switch and standing cars were widely separated, the view between them was unobstructed, so that Voelker and the switching crew could each have ascertained the movements of the other with little effort. It was important, therefore, to know whether it was Voelker's duty to take the precaution necessary to avoid injury from an exposed position between the cars and the movement of other cars, or whether it was the duty of the switching crew to take this precaution. While the evidence respecting the practice in switching cars and the duties to be performed by those engaged therein was conflicting, that produced by defendant, including the testimony of the yardmaster and of the foreman of the switching crew under whom Voelker was employed, tended to show that the practice long established, generally followed, and effective during Voelker's employment, was that this duty rested upon the car coupler, and not upon the switching crew. The custom is stated by one of the witnesses in this manner:

"Where the cars are kicked onto a track, and a man rides down the first cut, and goes into the field, and other cars are kicked in on the same track, it is not customary or a usual thing for the men who are kicking the cars in to wait before kicking in a second cut, to see where the man is who rode the first cut down. It is not customary for persons kicking in cars in that way to hold up or refrain from kicking them in, after one set of cars is kicked in, until they can see the man in the front, unless they get a signal from him or something. The man who rides down the first string is called the 'fieldman,' and he is understood to take care of himself—look out for himself. These were automatic couplers on these cars. The fieldman sets the couplers so if they come together they will catch. When he goes in, and finds he can't couple, and he understands other cars may come down the track, his duty is to step out. He don't need to give any signal—step out of the way. He would give no signal to the men who were kicking in the cars on the other end, because it wouldn't be necessary. You couldn't stop the cars, kicking them in there. It don't make any difference for that coupling he would let it go. It would be coupled up afterwards."

Another witness put it this way:

"Q. It wouldn't be customary to be looking for that [position of fieldman]? A. No, sir. When we switch cars we always kick one cut in, and the field-

Digitized by Google

man looks out for them, and keeps on kicking until you get the track filled up. Q. And then you would kick in cut after cut without looking to the fieldman at all? A. Yes, sir. * * * Q. The fieldman, as I understand it, is supposed to look out for himself? A. Yes, sir. Q. By the Court: Is there a difference between the action when a switchman or fieldman is in for the purpose of coupling up the cars? A. If the fieldman ain't got all the couplings made, you get hold with your engine, and couple them all up."

As applicable to this state of the evidence bearing upon the second charge of negligence, defendant requested the court to charge the jury as follows:

"If, while Voelker was working in the yards, it was the general and uniform custom to kick cars down to the fieldman without giving him any notice or warning, and Voelker continued in the service, such custom being practiced or acted on, he took the risks arising from this manner of kicking cars, and no recovery can be had because of injury to him caused thereby."

"If, while Voelker was working in the yard, it was the general and uniform custom to kick cars down to a fieldman, so called, without giving him any notice or warning, and Voelker was acting as fieldman, and cars were kicked down to him without giving him notice or warning, and he remained working in the yard while this custom or practice was observed, there can be no recovery for any injury done him because of the kicking of cars to him without giving notice or warning that it was to be done."

The court refused to so instruct the jury, and gave no other instruction upon the subject. We regard these requests as substantially the same, and think one of them should have been granted. The rejection of both was error. Each is in terms carefully confined to the charge of negligence in kicking or sending down the second set of cars, and each requires that the custom should have been general and uniform, and that Voelker should have continued in the service while the custom was being observed. If it was general and uniform, and was observed during his continuance in the service, it was manifestly within not merely his means of knowledge, but his actual knowledge. He was an experienced railroad employé, and was familiar with this branch of that service, having been in defendant's employ as a brakeman and switchman for a period of eight years. He therefore understood the dangers incident to the observance of such a custom. There can be no claim, under the evidence, that the injury was willfully or wantonly inflicted. Nor was the custom an unreasonable one. Whether or not there was occasion to go between the cars, and thus assume a position of exposure to injury from the movement of other cars, would be known to the fieldman, but not to the switching crew. His position would also enable him to judge of the character and probable duration of the exposure better than could be done by others. He would be primarily in a place of safety, would know that the work in which he was engaged was, in a larger sense, that of moving cars and making up trains, and, being in control of his movements, would not assume a position of danger without some volition of his own. If, in the presence and during the observance of a general and uniform custom of the character stated, Voelker continued in the service of defendant, he assumed the risk of injury arising from its observance.

The judgment is reversed, with a direction to grant a new trial.

Digitized by Google

NOTE.

Construction of Statutes as Affected by Mistakes in Writing, Grammar, Spelling, or Punctuation.

I. In General.

[a] (U. S. 1838) In construing an act of Congress, if there be a mistake apparent upon the face of the act which may be corrected by other language in the act itself, the mistake is not fatal.—Blanchard v. Sprague, Fed. Cas. No. 1,517 [3 Sumn. 279, 1 Fish. Pat. Cas. 14].

[b, c] (Minn. 1858) Under Rev. St. c. 81, § 2; declaring that all penal judgments in the districts courts may be examined and affirmed, reversed or modified by the Supreme Court, the word "penal" before judgment must be read "final," as such interpretation will render the whole chapter consistent with its intents and purposes.—Moody v. Stephenson, 1 Minn. 401 (Gil. 289).

[d] (N. Y. 1901) Where the meaning and intendment of a statute are plain, in view of all the circumstances they will control verbal inaccuracies. Judgment, McKee Land & Improvement Co. v. Swikehard (1898) 51 N. Y. Supp. 399, 23 Misc. Rep. 21, affirmed.—McKee Land & Improvement Co. v. Williams, 71 N. Y. Supp. 1141, 63 App. Div. 553.

[e] (S. C. 1882) The charter of the Cheraw & Darlington Railroad Company (11 St. at Large, p. 408) provided that landowners should make application for assessment of damages for land taken by the company in a manner "hereinafter" directed; but no directions followed. *Held*, that the Legislature intended to use the word "hereinbefore."—Waring v. Cheraw & D. R. Co., 16 S. C. 416.

[f] (W. Va. 1897) Where a statute amending a section of a given chapter of the Code refers to the section by the wrong number, and it is manifest from the title and body of the statute, that another section was intended to be amended, the error as to the number of the section will be disregarded, and the statute will be applied to amend the proper section.—State v. Cross, 29 S. E. 527, 44 W. Va. 315.

[g] (Wis. 1861) Where a private law is entitled "An act to amend an act to incorporate the Merchants' Mutual Ins. Co. of Milwaukee and acts amendatory thereof," and in the body of the act it refers to the Milwaukee Mutual Ins. Co. of Milwaukee, the word "Milwaukee" in the body of the act must be regarded as a clerical error, as the court will presume that the subject of a private law is expressed correctly in its title.—Nazro v. Merchants' Mut. Ins. Co., 14 Wis. 295.

[h] (Wis. 1892) Laws 1889, c. 368, enacted for the purpose of amending Rev. St. 1878, § 4381, in respect to the crime of rape, reads as follows: "Also amend section 4381 of the Revised Statutes of 1878 by striking out the word 'ten' where it occurs in said section, and inserting the word 'twelve,' so that said section, when amended, shall read as follows: 'Sec. 4381. Any person who shall ravish and carnally know any female of the age of twelve years or under,'" etc. The words "or under" were a mistake made in engrossing the bill, which read "or more." *Held* a mere clerical mistake, which the court would disregard, the only amendment intended and made being the insertion of the word "twelve" instead of "ten."—State v. Stillman, 81 Wis. 124, 51 N. W. 260.

II. Punctuation.

[a] (U. S. 1892) The official statements of members of the conference committees on the tariff act of 1890 (26 Stat. 567) that by a clerical mistake paragraph 318 of Schedule G was made to read, "Chocolate, (other than chocolate confectionery, and chocolate commercially known as 'sweetened chocolate,') two cents per pound"; but that the parenthesis should have ended after "confectionery," although supported by the history of the bill and its amendments, the attention of Congress having been called to the mistake, and no action taken, do not authorize the courts, when construing the statute, to change the punctuation actually made, in the absence of other evidence

Digitized by Google

that the intent of the statute required such change.—In re Schilling, 53 Fed. 81, 3 C. C. A. 440.

[b] (U. S. 1828) The construction of a sentence in a statute will not be made to depend on the punctuation, where a construction in accordance with the pointing would be manifestly contrary to the intention of the Legislature. —Black v. Scott, Fed. Cas. No. 1,464 [2 Brock. 325].

[c] (U. S. 1868) The punctuation of a statute, as printed, affords no very decisive test of construction, but may be regarded as one indication of the meaning.—United States v. Three Railroad Cars, Fed. Cas. No. 16,513 [1 Abb. U. S. 196].

[d] (U. S. 1881) The punctuation of a statute is not made to be relied on, and must be disregarded if it requires a construction which is repugnant to a sense of justice.—United States v. Voorhees (C. C.) 9 Fed. 143.

[e] (Cal. 1872) The courts will not permit an erroneous punctuation of a statute, in printing it, to have the effect of giving it an absurd construction. —Randolph v. Bayue, 44 Cal. 366.

[f] (Idaho, 1901) While courts, in order to carry out the will of the Legislature, which has been expressed in an imperfect way, will interpolate punctuation or words evidently intended to be used into a statute, yet, when the matter to be interpolated comprises the real substance of the act, the court is not authorized to make such interpolation.—Holmberg v. Jones, 65 Pac. 563, 7 Idaho, 752.

[g] (Ind. 1903) In the construction of a statute, the grammatical rule that where there are two words in a clause, each capable of being an antecedent, the relative pronoun refers to the latter, will not be applied where the punctuation shows that the Legislature intended the pronoun to refer to such antecedents jointly. Rehearing, 65 N. E. 922, denied.—Seiler v. State, 67 N. E. 448, 160 Ind. 605.

[h] (Kan. 1901) Where a particular clause or sentence of the statute is so ungrammatical or so punctuated as not to make sense, and the intention of the Legislature is clearly ascertainable from the context and statutes in pari materia, the Supreme Court will put that construction on the statute intended by the Legislature, and for such purpose may change the punctuation and capitalization to express such intention.—State v. Deuel, 66 Pac. 1037, 63 Kan. 811.

[i] (Md. 1900) Where a statute contained two sentences, the last of which, as punctuated, had no meaning, the court, in construing the statute, may change the punctuation so as to give a meaning to both sentences; the punctuation being no part of the statute.—Manger v. Board of State Medical Examiners, 45 Atl. 891, 90 Md. 659.

[j] (Mass.) In construing a statute, the punctuation may be disregarded.—(1857) Cushing v. Worrick, 75 Mass. (9 Gray) 382; (1885) Martin v. Gleason, 139 Mass. 183, 29 N. E. 664.

[k] (Mont. 1895) Cr. Laws, § 86 (Comp. St. 1887), makes it an offense for any person to "mark, brand, alter, or deface the mark or brand, of any horse," etc., with intent to steal the same, or prevent the identification thereof by the owner. *Held*, that since the statute, as published with a comma after the word "alter" and the second "brand," is senseless, but with them stricken out, and one inserted after the word "of" following the second "brand," has a sensible meaning, the latter construction must be adopted.—State v. Pilgrim, 17 Mont. 311, 42 Pac. 856.

[l] (N. J. 1889) The journals of the branches of the Legislature will not be considered as evidence in the interpretation of the tax law of 1884, to show that the words "or manufacturing companies or mining companies carrying on business in this state" were agreed upon in a conference committee of the two houses, and reported and passed, with a comma after the words "manufacturing companies," especially where it appears that the act was engrossed and printed, and signed by the Governor, without such comma.—State v. Underground Cable Co. (Ch.) 18 Atl. 581.

[m] (Ohio, 1866) Courts will, in the construction of statutes, for the purpose of arriving at the real meaning and intention of the law makers, disregard the punctuation, or repunctuate, if need be, to render the true meaning of the statute.—Hamilton v. The R. B. Hamilton, 16 Ohio St. 428.

Digitized by Google

[n] (Or. 1903) Quotation marks are marks of punctuation, and the punctuation of an act or its title is not controlling in construing it for the purpose of ascertaining its real meaning.—State v. Banfield, 72 Pac. 1093, 43 Or. 287.

[o] (Pa. 1860) When effect may be given to all the words of a statute by transposing a comma, the alternative being the disregard of a material and significant word, the former course will be adopted.—Commonwealth v. Shopp, 1 Woodw. Dec. 123.

[p] (Pa. 1894) The misplacing of the quotation marks in the title of a supplemental act is not a substantial inaccuracy, and does not vitiate where the sense is clear.—Commonwealth v. Taylor, 159 Pa. 451, 28 Atl. 348, 34 Wkly. Notes Cas. 51.

[q] (Vt. 1882) St. 1872 provides that "no lien reserved on personal property sold conditionally and passing into the hands of the conditional purchaser shall be valid against attaching creditors or purchasers without notice." *Held*, that the act should be read as though there were a comma after "purchasers," such comma having been inserted in the original act, though not in the printed copy.—McPhail v. Gerry, 55 Vt. 174.

(131 Fed. 1.)

THE ERSKINE M. PHELPS.

(Circuit Court of Appeals, Ninth Circuit. May 31, 1904.)

No. 1,014.

1. SEAMEN—INJURY IN SERVICE—DUTY OF SHIP TO MAKE NEAREST PORT.
The master of a sailing ship on a voyage to Honolulu was not chargeable with a neglect of duty which renders the ship liable in damages because he did not return from the vicinity of Cape Horn to Port Stanley, Falkland Islands, which was the nearest port, and 540 miles distant, with a seaman who received an injury in which both bones of his leg below the knee were broken, where the mate, who had some surgical skill and experience, took charge of the injured man, and set the bones, which united firmly, but, by reason of the fracture being oblique, overlapped, producing a shortening of the leg, and where, while the ship could probably have made the islands in two or three days, the season was midwinter, when the days were short and cold and storms prevailed, and it was further shown without contradiction that the entrance of the harbor at Port Stanley by a ship of her size was very dangerous, and likely to take several days at that season, and that vessels went there only as a last resort, and in cases of dire necessity.

Appeal from the District Court of the United States for the District of Hawaii.

R. W. Breckons and Holmes & Stanley (Milton Andros, of counsel), for appellants.

T. McCants Stewart and J. J. Dunne, for appellee.

Before GILBERT and ROSS, Circuit Judges, and HAWLEY, District Judge.

GILBERT, Circuit Judge. The appellee was an able-bodied seaman on the Erskine M. Phelps, a full-rigged four-masted ship of 2,715 registered tons, which sailed on May 1, 1903, from the port of Norfolk, Va., bound for the port of Honolulu, Hawaiian Islands. On July 15, 1903, while in latitude 58° 29′ south, longitude 65° 30′ west, a little to the southward and westward of Cape Horn, the ship encountered

Digitized by Google

very heavy gales, and was laboring heavily. About 6 o'clock in the evening, when the ship had just come about, and while the men were hauling at the forebraces, a large wave came over the port bow and completely buried the fore part of the ship. The appellee, who was hauling at the forebraces, was struck by the wave and thrown against the rail, and thereby sustained a fracture of both bones of the right leg at a point nearly midway between the ankle and the knee. The captain, knowing that the first mate had some medical skill, directed him to set the broken leg. The first mate accordingly did so. He testified, and it is not disputed, that he had served from 1894 to 1897 in the United States navy, and had received instruction in "first aid to the wounded," and had served 270 days in the Boer War, in which he said he had had plenty of experience, for the small commandoes had no surgeons, and the men had to help one another. The first mate, after setting the fractured bones, placed the appellee's leg in splints, bandaged it, and suspended it in a swing. The appellee was confined to his bunk until August 23, 1903, when he was carried out on the deck. Four days later, while walking on the deck with the support of a crutch and a cane, he slipped and fell, and his leg was again injured, probably broken. It was again bandaged and placed in a sling, and the appellee was confined to his bunk until about four days before September 15, 1903, the date of the arrival of the ship at Honolulu. On September 17, 1903, at his request, the appellee was taken to a hospital at Honolulu. It was there ascertained that the bones of the leg, which had been obliquely fractured, had firmly united, but that they overlapped, producing a shortening of the leg. The trial court found that the appellee was permanently injured and incapacitated from performing hard labor, but that there was no proof of the failure of the ship in its duty to him, except in the neglect to provide proper care and medical attention, which should have been done by putting into some convenient port for surgical treatment, and that the failure of the master so to deviate from his course constituted negligence for which the ship was liable in the sum of $1,800.

The accident occurred in the middle of the winter season. Eight others of the crew were injured at the same time, leaving nine men on duty. Of these nine men, the captain testified—and it is not denied—that two or three were useless on account of saltwater boils and ulcers. The same sea that caused the accident washed overboard the fore and main braces. Some of the braces were cut in twain by the iron shutters of the ports; some of them had to be spliced, and others replaced. Under these circumstances the captain was confronted with the question whether his duty to the injured seaman required him to take the appellee back to Port Stanley, in the Falkland Islands, for surgical treatment. The lower court held that it was his duty to have put into the nearest port to obtain such aid, "if it was reasonably possible for him to do so," and that he should have sailed for Port Stanley. At the time of the accident, as shown by computations made from the log of the first officer, the ship was 484 miles in a direct line from that port, and 540 miles as the ship would sail. The wind was favorable for sailing in that direction. The ship, with all sails set, and under favorable conditions, could make 288 miles per day. The captain, in giving his

Digitized by Google

reasons for not putting back to that port, said that he considered it sheer madness to attempt to enter the harbor of Port Stanley with the ship and crew in the condition in which they were. He testified that he was a master mariner of experience, and had sailed 35 times around the Horn. He admitted that he could very easily have gone back to the region of the Falkland Islands, but he testified that it was a stormy region, subject to continual sleet, hail, and snowstorms at that time of the year; that there was very little daylight, dark coming on at 4 o'clock in the afternoon and lasting until 8 o'clock in the morning, so that it was next to impossible to get a reliable observation from the sun; that if he had attempted Port Stanley with his ship and crew crippled as they were, he would have been in serious danger of running ashore and losing his ship; that the entrance to the harbor is less than one-half a mile wide; that there is no tug there; that there would have been great difficulty in working so long a ship into the entrance, since, even with a favorable wind, there is scarcely sufficient room to clear the entrance, and that with so long a ship half a mile is very scant room for sailing; that after entering the outer harbor it is dangerous to remain there, and it is necessary to proceed on into the inner harbor, for the reason that the water is from 36 to 38 fathoms deep, so as to make the anchorage insecure, and that in the outer harbor there was the further and probable danger of easterly gales; that the entrance to the inner harbor is but 250 yards in width. His evidence as to the hazardous nature of the entrance to Port Stanley was corroborated by five other witnesses, master mariners of experience, one of whom testified that in 1889 he had sailed into Port Stanley for repairs, and that he was 24 days outside the harbor before he could get in, and that in the outer harbor he paid out both anchors to the last fathom, but that the ship dragged her anchors, and went within 20 yards of the rocks, and that he remained in the outer harbor from 14 to 16 days. The testimony of all these witnesses was that no one would come to Port Stanley except as a last resort, or in a case of dire necessity. There was no evidence even tending to contradict this testimony, except an extract from the Encyclopedia Britannica, which, after referring to the establishment of stores and workshops at Port Stanley, said:

"And now ships can be repaired and provided in every way much better and more cheaply there than at any of the South American ports; a matter of much importance, seeing that a greater amount of injury is done annually to shipping passing near Cape Horn by severe weather than in any other locality in the world. The average number of ships entering Stanley Harbor in a year is about fifty, with an average tonnage of 20,000 tons."

Even if this extract be given the force of evidence, it goes no further than to show that a considerable number of ships do at some season of the year put into Port Stanley for repairs. But that is a statement not incompatible with the testimony of the witnesses that the entrance is extremely hazardous for a large ship, and that the port is only to be availed of in case of dire necessity.

In the case of The Iroquois, 118 Fed. 1003, 55 C. C. A. 497—a case in which a seaman was injured while at sea at a distance of 480 miles from Port Stanley—we held that the master should have either taken him into that port or to Valparaiso for treatment. But in that case the

Digitized by Google

injury was more severe than in the present case. The seaman sustained a fracture of two ribs as well as of both bones of his leg below the knee. There was no one on board who possessed any surgical knowledge or experience, and the bones of the leg never united. In that case, moreover, there was no evidence before the court of any difficulty in entering Port Stanley, and the accident occurred in the summer, instead of the winter, of that region. The Supreme Court, on appeal, with some hesitation affirmed our judgment, but only on the ground that the captain might have been negligent in not putting into Valparaiso. Said Mr. Justice Brown, speaking for the court:

"Each case must depend upon its own circumstances, having reference to the seriousness of the injury, the care that can be given the sailor on shipboard, the proximity of an intermediate port, the consequences of delay to the interests of the shipowner, the direction of the wind, and the probability of its continuing in the same direction, and the fact whether a surgeon is likely to be found with competent skill to take charge of the case. With reference to putting into port, all that can be demanded of the master is the exercise of reasonable judgment and the ordinary acquaintance of a seaman with the geography and resources of the country. He is not absolutely bound to put into such port if the cargo be such as would be seriously injured by the delay. Even the claims of humanity must be weighed in a balance with the loss that would probably occur to the owners of the ship and cargo. A seafaring life is a dangerous one. Accidents of this kind are peculiarly liable to occur, and the general principle of law that a person entering a dangerous employment is regarded as assuming the ordinary risks of such employment is peculiarly applicable to the case of seamen."

The court, in conclusion, said:

"As the decision of the District Court was unanimously affirmed by the Circuit Court of Appeals, we do not think there is any such preponderance of evidence as would justify us in disturbing their conclusions."

In view of that expression of the opinion of the Supreme Court and the circumstances of the present case, we do not think that the captain of the Erskine M. Phelps was negligent in not putting back to Port Stanley. But the trial court found, further, that the captain was negligent at a later date in not deviating from his course on August 6th, and putting into Valparaiso, which he could have reached by sailing nine days from that date. The captain testified that his reason for not going to Valparaiso was that at that time the weather was fine, and he had reason to believe that the bones of the appellee's leg had united, and that he was doing well. Three surgeons testified in the case—one for the appellee and two for the appellants. There is no substantial variance in their testimony. Their opinion was that, so far as the ultimate recovery of the appellee was concerned, nothing could have been done surgically after August 6th, and that from that time the conditions were as favorable on the ship as they would have been on land; that the motion of the ship would have no effect on the setting of the leg and its recovery if the leg were set and placed in a position where it could swing; that the best time to set it was as soon as possible after the fracture; and that, unless land could have been reached within two or three days from the time of the fracture, the appellee was practically as well off on board the ship as in a hospital. One of the surgeons testified that he found the appellee's right leg one

Digitized by Google

and one-quarter inches shorter than the other, but that he made no measurement. The other two measured it, and found it half an inch shorter than the other. But they all agreed that nature compensates, and in a measure corrects, such a shortening, and that an operation could be performed by breaking and resetting the bones, but that this could have been done as well on the arrival of the vessel in Honolulu as at Valparaiso or at Valdevia, three weeks after the accident. There was some difference of opinion as to the question of the permanence of the injury to the appellee by reason of the fracture of his leg if not further operated upon. Dr. Herbert testified that the appellee would ultimately have perfect use of his leg. Dr. Day thought that he would be able to follow his occupation, but that he would have to favor himself a little; that he would not be as nimble as he had been. Dr. Cooper considered the mending of the leg "a good job," and thought that the appellee would have a good leg—a leg that would enable him to earn a livelihood in any walk of life. When, on August 23d, the appellee was injured the second time by falling on the deck, the ship was as near to her port of destination as to any other. So far as the evidence goes, the shortening of the appellee's leg may have been caused by a second fracture sustained at that time. If that be true, the ship could not, in any view of the case, have been responsible for that injury. Considering the whole of the evidence as it is presented here, we think that the captain was not negligent at any point in the history of the case, and that the ship is not liable, therefore, in damages.

The decree is reversed, and the cause is remanded to the District Court, with instructions to dismiss the libel.

(131 Fed. 5.)

SPRIGG v. COMMONWEALTH TITLE INS. & TRUST CO.

(Circuit Court of Appeals, Third Circuit. June 24, 1904.)

No. 4.

1. DECEIT—FALSE REPRESENTATIONS—CONSTRUCTIVE FRAUD.

A mortgage to defendant, as trustee, securing bonds executed by a timber company, provided that the bonds should not be valid until certified by the defendant, and that before issuing any of the bonds there should be deposited with defendant, by the mortgagor, a sum of money sufficient to pay off the first four coupons (two years' interest) on the bonds. The mortgagor, after defendant had accepted the trust, pledged 100 of the bonds to plaintiff, and gave plaintiff an order on defendant therefor, whereupon defendant delivered to plaintiff a letter reciting receipt of the order; that the bonds were part of an issue described on the mortgagor's property, the title to which, etc., had been examined and approved by defendant; and that the papers were then in its possession, and stating, "We will hold the one hundred bonds subject to your order." *Held*, that defendant's promise to hold such "bonds" constituted a representation that defendant had certified the bonds, and received the money in compliance with the conditions precedent to their validity, the falsity of which representation was sufficient to entitle plaintiff to recover damages suffered by its having acted on the faith thereof, in an action against defendant for deceit.

Digitized by Google

In Error to the Circuit Court of the United States for the Eastern District of Pennsylvania.

For opinion below, see 119 Fed. 434.

Thomas Leaming, for plaintiff in error.

J. Hazleton Mirkel, for defendant in error.

Before ACHESON and GRAY, Circuit Judges, and KIRKPATRICK, District Judge.

GRAY, Circuit Judge. The record brought up by the writ of error in this case discloses testimony tending to prove the following facts:

In the spring of 1893, the firm of Rice Bros., of Providence, R. I., had dealings with the Standard Coal & Timber Company, a corporation then recently organized and doing business under the laws of the state of West Virginia, which resulted in a contract arrangement between them, by which Rice Bros. purchased a large quantity of timber, upwards of ten millions of feet, to be delivered, with freight and other charges paid, at Boston, Mass., at a price agreed upon. In pursuance of said contract, Rice Bros. were to advance to the timber company $15,000 to enable the company to proceed with the delivery of the timber. As security for the performance on their part of the contract, the timber company agreed to deliver to Rice Bros. 100 of their first mortgage coupon bonds, for $1,000 each. By an indenture dated the 2d of May, 1892, the said Standard Coal & Timber Company had executed a mortgage to the defendant, the Commonwealth Title, Insurance & Trust Company, which, after stating that certain bonds were to be executed and issued by said company for the aggregate amount of $1,000,000, and to be secured by said mortgage, conveyed to the said defendant as mortgagee, in trust, all its property, corporate rights, privileges and franchises in connection with the land and premises therein more particularly described, and comprising a tract of land in the state of West Virginia, of 204,000 acres. By a covenant contained in said mortgage, it was stipulated that the bonds issued to the said defendant company, in trust, should not be valid until certified by the said trust company, and further, that "before issuing any of the bonds herein described, there shall be deposited by the party of the first part, with the said trustee, a sum of money sufficient to pay off the first four coupons (two years' interest) on said bonds." The Commonwealth Title, Insurance & Trust Company, the defendant, was incorporated for the purpose, among other things, of accepting and executing trusts of this character, and was entitled to receive compensation therefor. The trust was duly accepted by the said company, as appears by the following acceptance upon said mortgage, and duly recorded therewith:

"The Commonwealth Title, Insurance and Trust Co. accepts the Trust mentioned in the foregoing instrument on the terms, conditions and limitations therein prescribed.

By Henry M. Dechert,
President.

Witness: A. A. Stull,
Secretary."

[Seal of Incorporation]

Prior to April 29, 1893, the whole number of bonds executed, so far as the timber company was concerned, were in the hands of the defend-

Digitized by Google

ant company, as trustee, and some had been issued prior to that date by the said trust company, certified by it as required by the stipulation in the mortgage above referred to, and for the four coupons (two years' interest) on which there had been deposited with the said trustee, a sum sufficient to pay the same. On the date last mentioned, and pursuant to the dealings between Rice Bros. and the defendant, the following order was issued in favor of the Rice Bros. to the defendant:

"Philadelphia, April 29th, 1893.

A. A. Stull, Esq., Secy. Commonwealth Title Insurance & Trust Company, Philadelphia, Pa.

Dear Sir:—You will please hold in trust or deliver to the order of Rice Brothers, lumber dealers of Providence, R. I., one hundred (100) first mortgage one thousand dollar ($1,000) bonds of the Standard Coal and Timber Company, in accordance with the terms of mortgage or trust deed held by you to secure said bonds.

Respectfully yours, Standard Coal and Timber Company.
By C. C. Cokefair, Secy."

Rice Bros. then deposited with their counsel, Carroll Sprigg, the contract they had with the timber company, and six promissory notes, aggregating in amount $15,000, which represented the advance they were to make to the timber company, to be held in escrow by him until the defendant, the Commonwealth Title, Insurance & Trust Company, should acknowledge the receipt of the above order, and deliver the bonds, or hold them for the benefit of Rice Bros., his clients. He accordingly drafted a letter, which was taken to Philadelphia by the timber company's assistant secretary, and a letter copied therefrom was signed by the defendant and brought back to New York, whereupon Mr. Sprigg delivered the contract and notes to the timber company. These notes were afterwards paid in full, at maturity. The letter referred to, and which is the foundation of the suit in the court below, is as follows:

"Philadelphia, April 29th, 1893.

Messrs. Rice Brothers, Providence, R. I.

Gentlemen:—We are in receipt of an order from the Standard Coal and Timber Co., of West Virginia, instructing us to hold in trust for you one hundred, first mortgage, $1,000 bonds of said Company; the same being part of an issue of 1,000 bonds, $1,000,000, all of which are equally secured by a first mortgage or deed of trust dated May 2nd, 1892, made to the Commonwealth Title, Insurance and Trust Company of Philadelphia as Trustee by the said Standard Coal & Timber Company of West Virginia, covering 204,000 acres of mineral and timber lands located in McDowell County, in said State of West Virginia.

The Company is incorporated under the laws of the state of West Virginia, and the bonds are secured by the first mortgage or deed of trust now held by us as Trustee. Said mortgage or deed of trust together with certified abstract of title, opinions as to value of property covered by said mortgage or deed of trust, maps, surveys, and other papers relating to the same have been carefully examined and approved by us and are now in our possession.

We will hold the one hundred (100) bonds subject to your order.

Respectfully yours, A. A. Stull, Treasurer."

It was testified that, at the date of this letter, a decree of the court of last resort in West Virginia had been entered, declaring the title of the 204,000 acres of land mortgaged, absolutely void. It was also in testimony that the Rice Bros. lost their advances of $15,000 and also about $40,000 on the timber contract. On November 6, 1893, Rice

Digitized by Google

Bros. demanded delivery of the bonds, pursuant to defendant's undertaking, in the following letter:

"Providence, R. I., November 6th, 1893.

To the Commonwealth Title, Insurance & Trust Company, 813 Chestnut street. Philadelphia, Pa.

Gentlemen:—Please send us by express the one hundred first mortgage one thousand dollar bonds of the Standard Coal & Timber Company, held subject to our order, pursuant to the terms of your letter to us, dated April 29th, 1893. We will pay the express charges at this end of the line.

Yours truly, Rice Bros."

In response to that letter, Rice Bros. received a letter, dated November 8, 1893, as follows:

"Philadelphia, November 8th, 1893.

Messrs. Rice Bros., Providence, R. I.

Gentlemen:—Replying to your favor of the 6th, since writing you on April 29th, we have declined to act as Trustee for the bonds, and have so notified the company.

Very truly yours, A. A. Stull, Treas."

To this letter, the following answer was returned:

"Providence, R. I., November 11, 1893.

A. A. Stull, Esq., Treasurer, Commonwealth Title, Insurance & Trust Co., Philadelphia, Pa.

Dear Sir:—Our request to you under date of the 6th instant was addressed to you for the purpose of securing the possession of the bonds as contemplated under the terms of our arrangement with you. As we understand your reply, coupled with the information that has come to us from the officers of the Standard Coal & Timber Company, it indicates that you propose a resignation of your Trusteeship under the mortgage or deed of trust securing the bonds you now hold subject to our order. To this we of course have decided objection until we shall have at least had an opportunity of ascertaining the responsibility, pecuniary and otherwise, of the company, which may act as your successor, and therefore, we do now respectfully enter our protest against any such change of Trusteeship. Our letter was written to you for the purpose of obtaining the bonds mentioned, and we hereby again respectfully request their delivery to us, for we fail to see what right you have to withhold them from us for any such reason as that alleged in your letter. We write this letter because we think from your reply that you may not have lately read your letter to us of April 29th, which has no bearing upon any rights or purposes the Standard Company and your company may have for a change of Trusteeship under the mortgage. We shall expect you to forward the bonds at once, as their non-delivery to us as requested herein may cause us serious damage.

Yours respectfully, Rice Brothers.

Dictated by A. B. R."

As no reply was received to this letter, the matter was taken up, for Rice Bros., by their counsel, Mr. Sprigg, who received the following letter from Mr. Dechert, president of the defendant company:

"Philadelphia, December 4, 1893.

Carroll Sprigg, Esq., 29 Broadway, New York.

Dear Sir:—Since the receipt of your letter of the 24th ult. we have been definitely notified that the Standard Coal and Timber Co. would within a few days elect a new trustee in the place of this Company, resigned. We find that in September last this Company duly resigned by letter of resignation sent to that Company and that a few days afterwards that Company by its Asst. Secretary and Treasurer duly notified this Company that all of the officers and directors agreed that our resignation should be accepted and likewise accepted the notice previously sent to them that pending this election of a new trustee

Digitized by Google

we would deliver no more bonds or do any other act as trustee. You will see that under this state of facts, and as we are again informed that at an early date a corporation meeting will be called for the election of a new trustee, this Company should not at present intermeddle by the delivery of bonds. We will keep you advised of the election of such new trustee, so that your interest may be protected.

Yours respectfully, Henry M. Dechert, President."

Four months thereafter, there was a letter from F. Carroll Brewster, as counsel for the defendant company, to Carroll Sprigg, as counsel for the Rice Bros., in which the writer, among other things, says:

"1. No bonds now in the possession of the Trustees have been certified by signature endorsed thereon—as required—to give them validity. If this be so—the delivery to your Clients would only be of pieces of paper.

2. Not one dollar has been deposited by the mortgagors—by your clients or by any person to pay the first four coupons on the bonds you claim."

Suit was brought in the name of the Rice Bros., Carroll Sprigg being the use plaintiff, and testimony tending to show the facts herein recited was given at the trial. In the pleadings, the action was stated to be one of trespass on the case, and the statement of claim, as first filed, set forth specially, as negligence on the part of the defendant, the statement, "that the mortgage or deed of trust, maps, surveys and other papers relating to the same have been carefully examined and approved by us and are now in our possession," and that, in reliance upon such statement, the promissory notes, contract and other papers were delivered to the timber company. At the trial, the statement of claim was amended, so that the learned judge of the court below approved it as a proper declaration in an action for deceit, based upon the declaration of the defendant in his letter of April 29, 1893, after reciting the order of the Standard Coal & Timber Company, of the same date, that it would hold the 100 bonds therein referred to, subject to the order of Rice Bros. This, the amended statement of claim averred to be an undertaking to hold valid bonds secured by a first mortgage, when in fact defendant had not certified such bonds, and knew it had not certified the same and that the money required to pay for the first four coupons had not been deposited with it, and that said bonds, without such certification and deposit, were expressly not valid.

It was testified by Rice, that in making the advance of $15,000, and entering into the obligations of the contract, he relied absolutely upon the declaration that these bonds were held for them, and that he fully understood there should be $10,000 (two years' interest) deposited before the bonds could be issued. Sprigg, who was acting as counsel for the Rice Bros., testified as follows:

"I knew that the mortgage required certain conditions precedent to be performed, as well as the bonds. I advised Mr. Rice, in view of the high standing of the trust company, that any letter they would write would be perfectly satisfactory to me as his adviser, and on the strength of such letter from the trust company, I would advise the turning over of the contracts and notes, and papers, and pursuant to his agreement to that effect, I turned over the papers. * * * Mr. Cokefair told me the money was deposited for the coupons at the time I got the first bond from him, and on the 29th of April, the statement was reiterated in my office. Then I knew the bonds could not have been valid without the terms of the mortgage were complied with and the certificate at-

Digitized by Google

tached. * * * Q. You say on the 28th or 29th, at an interview at which Rice and Cokefair were present, you were told by Mr. Cokefair what? A. He said they had title to 204,000 acres of land down there, and they had the money deposited for the first four coupons—in other words, the bonds Mr. Rice was to get were in the same condition of my one bond. Q. The one bond that you got—did that have the coupons stamped and guarantied on the back? A. It had a rubber stamp impression on the back, the exact language of which I have forgotten, but it was the same in substance as that on the back of those. Q. You do not know the exact language, but what was the effect of it? A. Guarantying it. Q. By whom? A. By the trust company. Q. As a matter of fact were the first four coupons on your bond duly paid? A. They were. Q. And you had that knowledge of your own individual experience at the time you were representing Mr. Rice in this transaction? A. I did, and advised Mr. Rice of that fact. Q. Did you know other people who had these bonds? A. Yes, I knew them personally, and know them to-day. Q. Did you ever know of any trouble in the payment of interest on other bonds the first two years? A. They were all paid."

On the face of the bonds or writings executed by the timber company, and deposited with the defendant company, was the following:

"This bond shall not become obligatory unless it shall have been certified by the signature of the Trustee, endorsed thereon."

There were also offered in evidence, three of the coupons attached to bonds that had been issued by the defendant to show the language of the guaranty, which was stamped on the backs of the coupons, when the bonds were issued to other persons. It reads:

"Payment of this coupon guaranteed by the Commonwealth Title, Insurance and Trust Company of Philadelphia, A. A. Stull, Treasurer."

It was agreed at the trial, that this was the form used upon the first four coupons of all bonds that were issued. At the conclusion of plaintiff's testimony, a motion for nonsuit was granted by the learned judge of the court below, and judgment accordingly entered.

Upon the pleadings, and upon the testimony adduced by the plaintiff, we think the case should have gone to the jury. The question is, whether, when the defendant agreed to deliver or hold in trust 100 bonds to or for the plaintiff, they did not undertake to deliver or hold in trust bonds such as they were authorized to issue, that is, bonds which were certified by the trustee, and for the two-years interest on which, there had been deposited with the trustee a sum sufficient to pay the same. The representation made by the defendant company, in its letter of April 29th, was not that of an irresponsible or indifferent person, but of one charged with a special duty toward the one to whom the representation was made. The Commonwealth Title, Insurance & Trust Company, the defendant, was the trustee of the mortgage made by the timber company, to secure bonds to be issued by said timber company. These bonds, also, were issued to the defendant, as trustee, and it had specifically and in writing accepted the trust "on the terms, conditions and limitations" prescribed in the mortgage. The order given by the timber company, in favor of Rice Bros., expressly required that the 100 bonds mentioned in the order should be delivered to or be held in trust for Rice Bros., in accordance with the terms of the mortgage or trust deed given to secure said bonds. This order was

Digitized by Google

expressly accepted in the letter of the defendant, of the same date, as follows:

"Messrs. Rice Brothers, Providence, R. I.

Gentlemen:—We are in receipt of an order from the Standard Coal & Timber Company of West Virginia, instructing us to hold in trust for you one hundred, first mortgage, $1,000 bonds of said Company; the same being part of an issue of 1,000 bonds, $1,000,000, all of which are equally secured by a first mortgage or deed of trust, dated May 2nd, 1892, made to the Commonwealth Title, Insurance and Trust Company of Philadelphia, as Trustee. * * * We will hold the one hundred (100) bonds subject to your order.

Respectfully yours, A. A. Stull, Treasurer."

Surely, under the circumstances appearing in this case, this was not an idle representation that they held 100 pieces of paper that were clearly, by the stipulation of the mortgage, repeated on the face thereof, not valid as bonds, and which, by another stipulation in said mortgage, could not be issued by said trustee until there had been deposited with the said trustee an amount sufficient to pay the interest coupons for two years. It was in testimony that these stipulations and conditions were understood by Rice Bros. and by Sprigg, their counsel. If this were not so, the clear and unequivocal declaration of the trustee, in the letter of April 29th, had no meaning, and amounted to nothing, though made deliberately under the circumstances set forth in the testimony, with full knowledge on the part of the declarant, that important action on the part of the plaintiff, involving pecuniary risk, was to be based thereon. We may assume the exercise of ordinary intelligence in the transaction of human affairs. We cannot, therefore, gratuitously impute to the parties to this transaction, such a want of ordinary intelligence, as would be implied by the contention, that the carefully worded order of the timber company, to the defendant, to deliver or hold in trust the 100 bonds, and the written acceptance by the defendant, that it would hold the same on the "terms, conditions and limitations" of the mortgage, meant to those parties only, that 100 worthless bits of paper were to be so delivered or held. We think that Rice Bros., and those acting for them, had a right to rely upon this declaration, as one importing that these bonds had been duly certified, and that two years' interest ($10,000) had been deposited with the trustee, and to that extent guarantied, when the promissory notes and written contract were delivered. It is in testimony, that the trustee had already issued bonds properly certified, and containing a guaranty that money sufficient to pay two years' coupons had been deposited. There is nothing in the case made by the plaintiff, to indicate that the trustee had any reason to think that it was authorized, either to deliver or hold in trust, bonds or paper writings, invalid for want of compliance with the stipulated conditions, or that it was truthful to say that it held bonds pursuant to the said order, when they had neither the certification nor the deposit of money requisite to their validity. The defendant was made the mortgagee in the trust mortgage, as also the obligee in the bonds, which were to be deposited in trust, to be disposed of by the obligor for its own purposes. No bonds could, therefore, be issued or delivered, except by the trustee at the order of the timber company. We think that, by the acceptance of the trust under the

Digitized by Google

mortgage, the defendant trustee undertook, and had imposed upon it, the legal duty to see that no bonds were issued or held pursuant to the orders of the obligor, unless the conditions prescribed in the mortgage were complied with.

The declaration by the trustee, that it held in trust the 100 bonds, pursuant to the order to hold in trust or deliver these bonds, was equivalent to a delivery, so far as the rights of Rice Bros. were concerned. The order of the trustee was to "hold in trust" or "deliver." The declaration of the trustee was, that it held in trust the 100 bonds subject to the order of Rice Bros. It is no refinement of reasoning to say that these bonds could be no more held in trust by the trustee under this declaration, without complying with the stipulations of the mortgage, than they could be delivered without such compliance. The testimony is such, that the jury might well draw the inference, that this representation that it held bonds valid under the requirements of the mortgage, was not only false, but that the defendant alone knew that it was false. There was also testimony which would warrant a jury in finding that money had been advanced, and loss incurred to a serious amount by the plaintiff, by reason of its acting upon the faith of the representation thus made by the trustee.

We have here testimony tending to show all the elements necessary to an actionable misrepresentation, to wit, a false representation; knowledge of its falsity by the party who made it; ignorance of its falsity by the party to whom it was made; intention that it should be acted upon, and an actual acting upon it by the plaintiff, with resulting damage to it in consequence thereof. We cannot say that there was no evidence to go to the jury, in support of such a case as is claimed to have been made out by the plaintiff. The suggestion, that because the draft of the letter, written by the defendant company, was made by the plaintiff's attorney, its terms imposed a duty upon the defendant less exacting than if the letter had been voluntarily framed by it, does not appeal to us. The proposal of such a letter by plaintiffs, prior to their assuming grave pecuniary responsibility, might well have emphasized the caution with which the defendant should act in the execution of its responsible office. We cannot hold that the defendant should be released from all responsibility in the important relation it held towards the plaintiff, for a representation which it either knew to be false, or made with reckless disregard as to its truth, and upon the faith of which, the plaintiff so acted as to incur serious pecuniary loss, or that a jury should not consider, upon the evidence before it, whether, to the extent of $10,000 at least, defendant should not recoup the plaintiff for that loss.

We have examined carefully all the cases cited by the counsel for both the plaintiff in error and defendant in error, but it is only necessary to say, that the current of decisions, both federal and state, abundantly support the conclusion at which we have arrived. We do not think the case was one which should have been taken from the jury.

The judgment of nonsuit is therefore reversed, and a venire de novo awarded.

Digitized by Google

(131 Fed. 13.)

ASTRICH v. GERMAN-AMERICAN INS. CO. OF NEW YORK.

(Circuit Court of Appeals, Third Circuit. July 5, 1904.)

No. 61.

1. FIRE INSURANCE—CONDITIONS—VIOLATION AFTER LOSS—UNDESTROYED PROPERTY—SALE.

One of several policies insuring plaintiff's merchandise to the extent of actual loss provided that in case of disagreement as to the amount of loss the same should be ascertained by an appraisement, and that the loss should not be payable, or an action maintained to recover the same, until after 60 days after due notice, ascertainment, estimate, and satisfactory proof of loss had been received by the company in accordance with the terms of the policy; that the insured, as often as required, should exhibit to any person designated by the company all that remained of any property described in the policy, and should submit to examinations under oath, and produce books of account, etc., and that it should be optional with the company to take all or any part of the articles at such ascertained or appraised value, and to replace the property lost or damaged with other of like kind or quality at any reasonable time within 30 days after the receipt of proofs of loss or the giving notice of his intention to do so. After loss the property was separated as required, and, the parties failing to agree, insured, after filing, but before the receipt of proofs of loss by the insurers, and over their protest, advertised and sold the property remaining. *Held*, that such sale deprived the insurers of their substantial rights to further examination of the goods after proof of loss furnished, to adjust the loss by appraisement, and to replace the goods damaged with other goods of like character, and therefore precluded a recovery on the policy.

2. SAME—WAIVER—APPRAISERS—AUTHORITY.

Where plaintiff, having several policies, some of which insured both merchandise and fixtures and others insured fixtures only, had a conversation with one of the adjusters of the companies in interest after loss and after a forfeiture as to the merchandise had been incurred, in which such adjuster requested plaintiff to furnish proofs of loss as to the fixtures and furniture, such request, though complied with by plaintiff's sending such proof to all of the insurers, did not operate as a waiver of the forfeiture as to the merchandise insured by an insurer whose policy covered merchandise only.

In Error to the Circuit Court of the United States for the Middle District of Pennsylvania.

For opinion below, see 128 Fed. 477.

C. H. Bergner, for plaintiff in error.

Cyrus G. Derr, for defendant in error.

Before ACHESON, DALLAS, and GRAY, Circuit Judges.

GRAY, Circuit Judge. The suit in the court below was an action of assumpsit, on a policy of fire insurance. The plaintiff in error, who was the plaintiff below, was the proprietor of a large store in the city of Harrisburg, Pa., wherein he conducted a retail business in ladies' millinery, coats, furs, and furnishing goods. His stock of merchandise was insured for $22,000, in 13 companies, and his fixtures and furniture for $2,500 in certain of the said 13 companies. The German-American Insurance Company, the defendant, was one

¶ 1. See Insurance, vol. 28. Cent. Dig. § 1292.

Digitized by Google

of the companies which insured merchandise, and the amount of its policy was $4,500. Some of the other companies insured both merchandise and furniture and fixtures, the latter being contained in a clause in the policy separate from the clause by which the merchandise was insured. A fire occurred in the storeroom of the plaintiff, December 16, 1902, by which the building was considerably burned, and the entire stock of merchandise was either destroyed or injured, and the furniture and fixtures damaged.

The policy of insurance, upon which suit was brought in the court below, was issued by the defendant company to the plaintiff. It is in the usual form, and insured the plaintiff in the sum of $4,500, for the term of one year, against all direct loss or damage by fire, except as therein provided. Among the exceptions, stipulations and conditions attached to said policy, those having any bearing on the present case are as follows:

"1. This company shall not be liable beyond the actual cash value of the property at the time any loss or damage occurs, and the loss or damage shall be ascertained or estimated according to such actual cash value, with proper deduction for (2) depreciation however caused, and shall in no event exceed what it would then cost the insured to repair or replace the same with material of like kind and quality; said ascertainment or estimate shall be made by the insured and this company, or, if they differ, then by appraisers, as hereinafter provided; and, the amount of loss or damage having been thus determined, the sum for which this company is liable pursuant to this policy shall be payable sixty days after due notice, ascertainment, estimate, and satisfactory proof of the loss have been received by this company in accordance with the terms of this policy. It shall be optional, however, with this company, to take all, or any part, of the articles at such ascertained or appraised value, and also to repair, rebuild, or replace the property lost or damaged with other of like kind and quality within a reasonable time, on giving notice, within thirty days after the receipt of the proof herein required, of its intention so to do.

* * * * * * * * *

If fire occur the insured shall give immediate notice of any loss thereby in writing to this company, protect the property from further damage, forthwith separate the damaged and undamaged goods, personal property, put it in the best possible order, make a complete inventory of the same, stating the quality and cost of each article and the amount claimed thereon; and within sixty days after the fire, unless the time is extended, in writing by this company, shall render a statement to this company, signed and sworn to by said insured, stating the knowledge and belief of the insured as to the time and origin of the fire; the interest of the insured and all others in the property; the cash value of each item thereof and the amount of loss thereon," etc.

* * * * * * * * *

The insured, as often as required, shall exhibit to any person designated by this company, all that remains of any property herein described, and submit to examinations under oath by any person named by this company, and subscribe the same; and as often as required, shall produce for examination all books of account, bills, invoices, and other vouchers, or certified copies thereof, if originals be lost, at such reasonable place as may be designated by this company or its representative, and shall permit extracts and copies thereof to be made.

In the event of disagreement as to the amount of loss the same shall as above provided, be ascertained by two competent and disinterested appraisers, the insured and this company each selecting one, and the two so chosen shall first select a competent and disinterested umpire; the appraisers together shall then estimate and appraise the loss, stating separately sound value and damage, and, failing to agree, shall submit their differences to the umpire; and the award in writing of any two shall determine the amount of such loss; the

Digitized by Google

parties thereto shall pay the appraiser respectively selected by them and shall bear equally the expenses of the appraisal and umpire.

This company shall not be held to have waived any provision or condition of this policy or any forfeiture thereof by any requirement, act, or proceeding on its part relating to the appraisal or to any examination herein provided for; and the loss shall not become payable until sixty days after the notice, ascertainment, estimate, and satisfactory proof of the loss herein required have been received by this company, including an award by appraisers when appraisal has been required.

* * * * * * * * *

No suit or action on this policy, for the recovery of any claim, shall be sustainable in any court of law or equity until after full compliance by the insured with all the foregoing requirements, nor unless commenced within twelve months next after the fire.

* * * * * * * * *

This policy is made and accepted subject to the foregoing conditions and stipulations, together with such other provisions, agreements, or conditions as may be indorsed hereon and added hereto, and no officer, agent, or other representative of this company shall have power to waive any provision or condition of this policy except such as by the terms of this policy may be the subject of agreement indorsed hereon or added hereto, and as to such provisions and conditions no officer, agent, or representative shall have such power or be deemed or held to have waived such provisions or conditions unless such waiver, if any, shall be written upon or attached hereto, nor shall any privilege or permission affecting the insurance under this policy exist or be claimed by the insured unless so written or attached."

At the trial, after testimony on both sides had been submitted to the jury, the court instructed the jury that its verdict should be taken, subject to a reserved point, which was read. Accordingly, the verdict of the jury was rendered in favor of the plaintiff for $4,-300, with interest, subject to the point reserved, which was as follows:

"It being the undisputed evidence that the plaintiff's stock of goods was insured to the extent of twenty-two thousand dollars ($22,000) in thirteen (13) different companies, of which the defendant was one, the insurance in such company being $4,500; that a fire occurred on December 16, 1902, during the life of the said policy, by which a large part of the said stock was entirely consumed and other parts damaged by fire, smoke and water; that immediately after the fire the plaintiff put in order the stock that was left, separating the damaged from the undamaged goods; that on December 29th and 30th, after due notice, agents and adjusters representing the said several insurance companies, including the defendant, went upon the premises and investigated the loss, and, for the purpose of ascertaining the extent of the same, examined the books, bills and accounts of the plaintiff, carefully and thoroughly, and inspected the damaged and undamaged stock, being occupied in such examination more or less for two (2) days; that as a result of the same they collectively offered, on behalf of all the said companies, to pay the plaintiff in settlement of his said loss the sum of twenty-two thousand dollars, the aggregate amount of his insurance, the said companies to take the stock which remained and wreck the same—that is to say, ship it to New York or some other general market and there have it put in order by persons experienced in such business, and then and there sell it by auction or otherwise for such price as it would bring, the plaintiff to receive all that it brought up to five thousand dollars, after deducting expenses, and the insurance companies to receive the excess above that sum; which offer the plaintiff refused; and that the said agents then and there made a further offer to pay the plaintiff in settlement of his said loss, the sum of $17,500, he retaining for his own benefit the said stock on hand; which offer the plaintiff also refused; that thereupon he was told by the said agents to read his policy and observe its terms, on which the parties then and there separated; that, afterwards, the plaintiff made out due proofs

Digitized by Google

of loss, which he forwarded to the defendant company on January 9th following, which were duly received by said company; that on January 8th, the day before he furnished said proofs, after first having advertised the stock for sale, the plaintiff, without notice to said companies, began to make private sale thereof and continued to sell the same for the three days next following, until the said goods were disposed of, realizing therefrom the gross sum of about sixty-two hundred dollars ($6,200) and being at the expense of about two thousand dollars ($2,000) in so selling them; that the insurance companies, including the defendant, having learned that such sale was about to be made, notified the plaintiff, by telegram and letter, that he should not dispose of the said goods, that they desired to exercise the rights given them by the policies of insurance which he held of further examining said goods to determine their value and the loss or damage sustained thereon, and calling attention to the fact that the said companies had the right if they desired to, to take the stock, or in case of disagreement as to the extent of the loss to have the same determined by appraisement; and thereupon notifying plaintiff that if he proceeded with the sale, his policies would be rendered null and void; and that notwithstanding such notice the said plaintiff proceeded to make sale of the said goods.

Whereupon, in view of the provisions of the policy in suit, a copy of which is attached to plaintiff's declaration of statement, and is made a part of this point, the question of law is reserved.

Whether the policy, by reason of the said sale so made by the plaintiff, was avoided and whether the plaintiff is entitled to recover thereon in this action; with leave to the Court to enter judgment in favor of the defendant, notwithstanding the verdict if it be found that such is the law."

Motion for judgment for defendant, non obstante veredicto, was accordingly made, and after argument, the court granted said motion, and gave judgment in favor of the defendant on the point reserved.

In considering the questions raised upon the assignments of error, we first advert to the general contention of the defendant, that the insured, by his conduct in advertising and effecting a sale of the damaged goods before the proofs of loss required by the policy of insurance, which he had made out and forwarded to the defendant company, had been received by it, forfeited his right to claim indemnity under said policy. It will be seen, by reference to the paragraphs of the policy heretofore quoted, that there is an express stipulation between the insurer and insured, that in case of disagreement between them, as to the amount of the loss, the same should be ascertained by an appraisement of disinterested appraisers, selected by the parties respectively, and that the loss shall not become payable until sixty days after the same shall have been so ascertained. There is also a stipulation that the insured, as often as required, shall exhibit to any person designated by the company, all that remains of any property described in the policy, as well as submit to examinations under oath, and produce books of account, etc. The insurance contract also provides that it shall be optional with the company to take all or any part of the articles at such ascertained or appraised value, and also to replace the property lost or damaged with other of like kind and quality, at any reasonable time within thirty days after the receipt of proof of loss, on giving notice of his intention to do so.

We agree with the court below, that the right under this policy to an appraisement was absolute, if the insurers found that they

Digitized by Google

desired it. It was essential to the enjoyment of this right that the damaged stock should be retained by the insured, where it could be examined for the purpose of appraisement. It was in evidence, and not disputed, that there had been, a short time prior to the sale, an effort of the parties to ascertain and amicably settle the loss between them, and that serious differences had existed while this attempt to settle was in progress, and that it had finally been abandoned, with a notice to the insured, that the company would stand upon the terms of its policy. The provisions of the policy, repeated in two different places, are express, to the effect that, in the event of disagreement, and failure amicably to settle the loss between the parties, the right to an appraisement shall accrue, and we fail to see anything in what occurred between the parties, while the efforts to settle were in progress, to impair or at all affect the right of the insurer in this respect. The fire occurred on December 16, 1902. It is true, that due notice of the same was given by the insured to the company; that the insured, under the direction of the agents of the insurance companies, had separated and arranged the goods that were not totally destroyed, for quick and careful examination; that the adjusters of the insurance companies came to the insured premises, and examined the damaged goods on the 29th and 30th of December, and after an examination of the said goods and books of the insured, and making inquiry of the insured himself, made three offers to pay certain sums of money, in full settlement of liability; that on making the last offer to settle the liability of all the companies, by the payment of a lump sum of $17,500, it was said by the adjusters that such offer was the last and final one, and that, it being refused, the adjusters departed. It is true, also, that there was testimony that the goods damaged were deteriorating in value and condition, and that after the final offer on December 30th, the insured expended money and trouble in preparing and advertising the goods for sale, and that the season in which a large number of the goods which had been damaged could be used, or were salable, was nearly ended.

There is nothing, however, in any of these facts, taken singly or together, that in our opinion, has any bearing upon the right of the insuring company, under the circumstances, to an appraisement. They disclose only what seems to be the not unusual situation, when such a settlement between the parties is attempted. Three several offers of payment, in full settlement of the companies' liability, were made and rejected. The statement, that the offer last made was a final one, seems to us only to have made clear the necessity for an appraisement. The fact that the goods were deteriorating, and that the time in which they were salable was passing by, are circumstances inhering in the situation, but of no possible effect as to the right to an appraisement, and could in no way justify the action of the assured in destroying all opportunity for the enjoyment of that right. Nor does the fact, if fact it be, that one of the adjusters told the insured, in the presence of the other adjusters, that there was no use in making the appraisement of the damaged goods, because the in-

Digitized by Google

sured would not fix the value of the goods burned out of sight, have any such relation to the right of appraisement, as to have made it necessary or proper for the court to have incorporated the same in the statement of the point reserved. It is in evidence that there had been an effort on the part of the adjusters to induce the insured to value the goods burned out of sight, as a basis for their adjustment, and the remark of the adjuster, that without such valuation, there was no use in appraisement, was persuasive to that end. There is no evidence, however, that the one making the remark was authorized by the defendant to dispense with an appraisement, or to forego any right in that respect possessed by it. Nor could the fact, that the damaged goods were inspected by the adjusters on December 29th and 30th, have warranted the insured in considering an appraisement to have been dispensed with by the company. This inspection was a usual precaution taken by the agents of insuring companies, to ascertain facts for themselves connected with the loss, and in this case, was expressly preliminary to the effort made to reach an amicable adjustment. As said by the court below:

"When it failed, and the parties fell apart, they were remitted to their several rights, which each side was bound to respect and observe. Recognizing this, the plaintiff drew up and forwarded his proofs of loss, on the receipt of which the insurers were entitled, if they found it necessary, to require a new exhibition of the damaged goods, just as they had the right to call for his books and papers, or to demand that he should submit to an examination under oath."

Founded upon this right to an appraisement, there was another right of the insurer under the policy, and of which it was deprived by the action of the defendant in the sale and dispersion of the damaged goods. This was the option already alluded to, reserved to the company, "to take all or any part of the articles at such ascertained or appraised value * * * or replace the property lost or damaged with other of like kind and quality, within a reasonable time, on giving notice within thirty days after the receipt of the proof herein required, of its intention so to do." Clearly this right could only be enjoyed, where there had been, either an amicable ascertainment of loss or an appraisement, as provided for in the policy, and where opportunity was given within thirty days after the receipt of the proof, to examine the goods damaged. The plaintiff made out due proofs of loss, and forwarded the same to the defendant company, on January 9th. This notice could not have been received until the day following, when all the goods had been sold at private sale and irretrievably dispersed. The plaintiff, having by his own act destroyed those unequivocal rights reserved in the policy to the insurer, cannot now be heard to complain of a forfeiture of his own claims under a policy containing the express stipulation, that "no suit or action on this policy, for the recovery of any claim, shall be sustainable in any court of law or equity, until after full compliance by the insured with all the foregoing requirements." Nor can the plaintiff allege that he was suffered to rest under any misunderstanding as to the attitude of the company, as evidenced by what took place on the 29th and 30th of December, when the goods were being

Digitized by Google

examined by the adjusters and efforts were being made to amicably settle the loss, or that there was a silence on the part of the insurers, when they ought to have spoken. In regard to this point, the record discloses, that on January 6, 1903, plaintiff advertised his damaged goods for sale on the 8th, 9th and 10th of said month, and on January 7, 1903, the adjusters for the companies in interest, wrote the following letter, received by the plaintiff before the said sale commenced:

"Philadelphia, January 7, 1903.

Mr. Herman Astrich, Harrisburg, Pa.

Dear Sir: From information received, we believe that you have by public advertisement, and otherwise, stated your intention to dispose of by sale, commencing January 8, 1903, stock damaged by fire December 16, insured in this and other companies. We desire to call your particular attention to the conditions contained in your policies of insurance which constitutes the contract between said companies and yourself. Under the same it is the right of said companies to continue to make an examination of said property, with the privilege on their part, if they desire, to exercise the option, to take said stock, and also by reason of disagreement between you and said companies as to the amount of loss and damage sustained, to have that matter determined by appraisement. We now notify you that we have arranged to examine said stock Monday, January 12, to determine, if possible, the value, or damage, sustained, and if the contemplated action on your part is effected, it will be in direct violation of the rights possessed by said insurance companies, and the said policies of insurance will be thereby rendered null and void by you.

Reserving all legal rights and waiving none, we are,

Yours truly, G. A. Russell,
William H. Whitall,
Adjusters for Companies in Interest."

We think, therefore, that under the facts shown, there was clearly a forfeiture of the plaintiff's right to claim indemnity under the policy sued upon.

But the plaintiff contends, that, granting forfeiture, testimony was offered by him, tending to show conduct on the part of the insurer, from which the jury would be justified in inferring a waiver of the said forfeiture. The rejection of this testimony is the ground of the first assignment of error, which is as follows:

"(1) The court erred in the rejection of the evidence of Herman Astrich, a witness for the plaintiff, contained in the offer made by the plaintiff, as follows:

By Mr. Bergner: Mr. Derr, are you claiming that this policy was forfeited because of the sale of the goods?

By Mr. Derr: Yes.

By Mr. Bergner: I propose to show by the witness upon the stand that there was an insurance upon the merchandise and also upon the fixtures, cases, etc., in this building; that by certain policies the fixtures and merchandise were insured in separate items; that on the 12th day of January, Mr. W. H. Whitall, an admitted agent of the defendant company, came to Mr. Astrich's place of buiness, and, after inquiry of him concerning the sale of goods referred to, demanded that he furnish proofs of loss and schedules of the furniture and fixtures destroyed in this case; this for the purpose of showing waiver of the alleged forfeiture claimed by defendant; to be followed by evidence that Mr. Astrich complied with the demand at considerable expense and sent the proofs of loss."

It is true that courts do not favor forfeitures, and are liberal, according to circumstances, in finding a waiver. This is true especially where

Digitized by Google

there is ground for imputing bad faith in the conduct of one party towards the other, who has incurred the forfeiture. In the case before us, there is no question of bad faith. It is solely a question of fact. Did the evidence offered tend to show satisfactorily that the defendant company intended to waive the forfeiture incurred by the plaintiff, through his noncompliance with the conditions of the policy? If it did not, there was no waiver, and the plaintiff was not justified in acting upon it as if it were a waiver. A waiver is a voluntary relinquishment of the right that one party has in his relations to another. Such waiver may be either express or implied. An express waiver is governed by its own terms, takes care of itself, and is not often the occasion of dispute or litigation. An implied waiver, of a forfeiture for instance, is where one party has pursued such a course of conduct, with reference to the other party who has incurred the forfeiture, as to evidence an intention to waive the same, or where the conduct pursued is inconsistent with any other honest intention, than an intention to waive the forfeiture, and the one who has incurred the forfeiture has been induced by such conduct to act upon the belief that there has been a waiver, and has incurred trouble and expense thereby. There is no confusion about the rules of law, applicable to this question. They are founded upon fundamental rules of evidence, and upon the obligations of morality obtaining in human affairs. It is essentially a matter of intention, though circumstances may sometimes be such that the real intention is immaterial, and the question is, whether a party is not estopped by conduct evidencing an intention upon which another has acted, to say what his true intention really was. In such cases, the ordinary and well-understood doctrines of estoppel by conduct is applicable. We think, in the case before us, the learned judge of the court below was right in rejecting the offer of testimony above stated. Whitall, the adjuster who made the request that the plaintiff should send in proofs as to the loss of furniture and fixtures to all the thirteen companies, was not the special agent of the defendant company. He had appeared as one of the adjusters representing all the companies at the first investigation of the loss, and there was no offer of testimony to enlarge his agency for the defendant company, "so as to make it include so extraordinary an act as that of demanding proofs as to property not embraced in the defendant company's contract, and in which the defendant was not concerned." Some of the 13 companies represented by the adjusters, had included in their policies a separate insurance on furniture and fixtures, and some did not. In the latter class was the defendant company. This the plaintiff was bound to know, and therefore bound to know that the request by Whitall, for a statement of loss as to furniture and fixtures for the defendant company, was that he should do a thing totally unrelated to his contract with that company, and one that could have no possible bearing upon the attitude of that company, with reference to the loss on the merchandise, or its liability therefor. The request, therefore, was not only unauthorized, but was totally irrelevant to the business in hand between the plaintiff and defendant. How, then, could an intention to waive, be inferred from such a request, and how could the plaintiff

Digitized by Google

have been induced to believe, by such request, that the defendant company intended to waive the forfeiture it had the right to claim? What actually happened, doubtless, was that the adjuster, in asking for a statement of loss as to fixtures and furniture to be sent to the companies insuring the same, by mistake included the defendant company with the other insuring companies, most of whom had insured furniture and fixtures. It would work injustice, and not justice, to hold that this mistake, for which the company was in no way responsible, and by reason of which the plaintiff is alleged to have incurred the trifling trouble and expense of sending a copy of its statement of loss on fixtures and furniture to the defendant company, who it was bound to know had no insurance thereon, relieved the insured from a forfeiture occasioned by his disregard of the stipulations of the insurance contract. It is to be noted, that the offer was, not that the defendant company demanded the proof as to furniture and fixtures, nor that Whitall, an agent authorized by the defendant to demand proofs as to furniture and fixtures, had demanded such proofs, but, simply that Whitall, "an admitted agent of the defendant company," made the demand. The fact that the defendant company had made no such demand, and that Whitall was not authorized by the defendant company to make such a demand on its behalf, being uncontroverted, we think the learned judge of the court below was right in rejecting this offer of testimony, and also in deciding the point reserved in favor of the defendant.

The judgment of the court below is therefore affirmed.

(131 Fed. 21.)

VIQUESNEY et al. v. ALLEN.

(Circuit Court of Appeals, Fourth Circuit. May 27, 1904.)

No. 510.

1. APPEAL—JUDGMENT—DEMURRER.

Where an order sustaining a demurrer to a bill for want of jurisdiction was in favor of appellants, who appealed from other orders and a final decree, appellee could not object that the Circuit Court of Appeals had no jurisdiction of the appeal, on the ground that the question of jurisdiction could only be reviewed by the Supreme Court.

2. SAME—FINAL DECREE.

Where a bill in equity was dismissed, and an order entered discharging a receiver and providing for the payment of costs, every question having been disposed of in so far as the trial court was concerned, it was a final decree, and therefore appealable.

3. FRAUDULENT CONVEYANCES—EQUITY—SIMPLE-CONTRACT CREDITOR—RIGHT TO SUE.

A simple-contract creditor cannot maintain a bill in equity in the federal Circuit Court to set aside fraudulent conveyances of his debtor's property, and to have the same administered by a receiver.

4. SAME—BANKRUPT ACT—CONSTRUCTION.

Bankr. Act, § 23a (Act July 1, 1898, c. 541, 30 Stat. 552, 553 [U. S. Comp. St. 1901, p. 3431]), providing that suits may be prosecuted in the federal

---

¶ 2. What decrees are final, see note to Brush Electric Co. v. Electric Imp. Co. of San Jose, 2 C. C. A. 379.

Digitized by Google

or state courts to determine adverse claims to the property of the bankrupt, and section 23b, providing that suits by a trustee in bankruptcy shall only be brought or prosecuted in the courts where the bankrupt whose estate is being administered by such trustee might have brought or prosecuted them if proceedings in bankruptcy had not been instituted, unless by consent of the proposed defendant, relate only to suits brought by trustees in bankruptcy, and do not authorize the maintenance of a bill by a simple-contract creditor to set aside alleged fraudulent conveyances in aid of a bankruptcy proceeding against the grantor.

Appeal from the Circuit Court of the United States for the Northern District of West Virginia.

V. B. Archer, for appellants.
W. T. George, for appellee.

Before GOFF, Circuit Judge, and PURNELL and McDOWELL, District Judges.

McDOWELL, District Judge. The appellee (complainant below) on March 7, 1903, filed in the court below his bill in equity against one Latham and the appellants. The bill, setting out requisite diversity of citizenship, alleges that complainant is a simple-contract creditor of the defendant Latham to an amount exceeding $2,000, and that Latham, who had been doing business as a general merchant, had, with intent to defraud his creditors, on January 29, 1903, transferred and delivered all of his property, consisting chiefly of his stock of merchandise, to the Viquesneys. It is further averred that complainant had contemplated filing a petition in the bankrupt court against said Latham, but "learned that such proceedings were being instituted by other creditors of said Latham." The prayer is that an injunction be granted, that a receiver be appointed to take charge of the stock of merchandise and other property, that this proceeding "be treated as an ancillary proceeding to the bankruptcy proceeding which has been instituted," that the sale by Latham to the appellants be set aside, and that the property be sold, and the proceeds be turned over to the trustee in the bankruptcy proceeding. On the day the bill was filed, a decree was entered appointing L. V. Holsberry as receiver, and directing him to take charge of the property and to carry on the business. The marshal was by this decree directed to put the receiver in full possession and control. Bond was required of the receiver, and, conditioned upon the execution of an injunction bond by the complainant, the Viquesneys were enjoined from in any manner interfering with the receiver. Both of these bonds were executed and filed on the day this decree was entered (March 7, 1903), and subpœnas, returnable to the first Monday in April, 1903, were issued against the defendants. It appears that the receiver took possession very shortly after his appointment. On March 20, 1903, notice was given by the Viquesneys that they would on March 24th move for the dissolution of the injunction, for the discharge of the receiver, and the substitution therefor of a bond. On March 24, 1903, an order was entered reciting that the Viquesneys then tendered their answer, which was ordered filed; that said defendants moved as set out in said notice, and filed affidavits in support of said motion; and that the complainant filed counter affidavits. The decree then directed the receiver to

Digitized by Google

cease making sales, and directed that he make and report an inventory. Except that the parties are given leave to file additional affidavits, no further action was then taken. On June 19, 1903, a decree was entered allowing the Viquesneys to withdraw their answer and file a demurrer. This was done, joinder in demurrer was filed, and the issue set down for argument. On July 8, 1903, an order was entered, which, after reciting that bankruptcy proceedings had been, since the institution of this suit, "taken" against Latham in the District Court for the Northern District of West Virginia, and that the court is of opinion that the bankruptcy court should settle all matters as to the title of the property, discharges the receiver, and directs him to turn over all the property and the proceeds of sales thereof to G. C. Holdsberry, trustee in the bankruptcy case. This decree also modifies the injunction to the extent of directing the receiver to surrender the property to the trustee in bankruptcy. On August 5, 1903, a decree was entered, which, without stating the grounds therefor, sustains the demurrer and dismisses the cause at the cost of complainant. This decree also makes an allowance to the receiver for necessary expenses incurred by him of $394.36, and, it being recited that the receiver had, under the decree of July 8th, delivered all the property and funds to the trustee in bankruptcy, directs the trustee in bankruptcy to pay to the receiver the said sum, if the trustee still has the money in his hands, or, if he has already paid the fund over to the Viquesneys, that they shall pay to the receiver the said sum. An appeal was prayed and allowed to the decrees of March 7th, July 8th, and August 5th. The errors assigned are, in brief, that the court below erred in appointing the receiver and directing him to take the property of the defendants, in directing the receiver to deliver the property to the trustee in bankruptcy, and in directing that the receiver's expenses should be paid either out of the proceeds of sales of the property, or by the trustee in bankruptcy out of such proceeds, or by the defendants.

We are met at the outset of our consideration of this cause by an objection on behalf of the appellee that this court has no jurisdiction of this appeal. It is said that the jurisdiction of the court below is in issue, and that only the Supreme Court has jurisdiction of this appeal. We assume that the court below sustained the demurrer because there was no jurisdiction. But this decision is not appealed from. It was in favor of the appellants. We find nothing here to support the view that this court is without jurisdiction of this appeal. McLish v. Roff, 141 U. S. 663, 12 Sup. Ct. 118, 35 L. Ed. 893; Carey v. Houston R. Co., 150 U. S. 170–179, 14 Sup. Ct. 63, 37 L. Ed. 1041; U. S. v. Jahn, 155 U. S. 109, 15 Sup. Ct. 39, 39 L. Ed. 87; Green v. Mills, 69 Fed. 852, 16 C. C. A. 516, 30 L. R. A. 90; Evans v. McCaskill, 101 Fed. 658, 41 C. C. A. 577; Dudley v. Board, 103 Fed. 209, 43 C. C. A. 184; Watkins v. King, 118 Fed. 531, 55 C. C. A. 290.

There is also no question of the finality of the last decree rendered by the court below. Every question has been disposed of, so far as that court is concerned. The cause has been dismissed, and orders made for the payment of the receiver. Nothing except to execute that decree remains to be done by the trial court.

Digitized by Google

We are satisfied that the bill did not show a cause of equitable cognizance. The complainant was a mere simple-contract creditor. In Scott v. Neely, 140 U. S. 106, 11 Sup. Ct. 712, 35 L. Ed. 358, the facts were closely similar to the facts in the case at bar. There a simple-contract creditor filed a bill in equity in the federal Circuit Court to have set aside a fraudulent conveyance of real estate made by his debtor, and to have the land sold for the satisfaction of the complainant's debt. The court said:

"In all cases where a court of equity interferes to aid the enforcement of a remedy at law, there must be an acknowledged debt, or one established by a judgment rendered, accompanied by a right to the appropriation of the property of the debtor for its payment, or, to speak with greater accuracy, there must be, in addition to such acknowledged or established debt, an interest in the property, or a lien thereon created by contract or by some distinct legal proceeding. Smith v. Railroad Co., 99 U. S. 398, 401 [25 L. Ed. 437]; Angell v. Draper, 1 Vern. 398, 399; Shirley v. Watts, 3 Atk. 200; Wiggins v. Armstrong, 2 Johns. Ch. 144; McElwain v. Willis, 9 Wend. 548, 556; Crippen v. Hudson, 3 Kern. 161; Jones v. Green, 1 Wall. 330 [17 L. Ed. 553]. In Wiggins v. Armstrong, Chancellor Kent held that a creditor at large, or before judgment, was not entitled to the interference of a court of equity by injunction to prevent the debtor from disposing of his property in fraud of the creditor; citing some of the above authorities, and stating that the reason of the rule seemed to be that, until the creditor had established his title, he had no right to interfere, and it would lead to unnecessary and perhaps a fruitless and oppressive interruption of the debtor's rights; adding, 'Unless he has a certain claim upon the property of the debtor, he has no concern with his frauds.' It is the existence, before the suit in equity is instituted, of a lien upon or interest in the property, created by contract or by contribution to its value by labor or material, or by judicial proceedings had, which distinguishes cases for the enforcement of such lien or interest from the case at bar."

In Cates v. Allen, 149 U. S. 451, 13 Sup. Ct. 883, 37 L. Ed. 804, the facts were essentially the same as in the case at bar. Simple-contract creditors filed a bill in equity in the federal court, alleging a fraudulent assignment by the debtor; praying for an injunction, for the appointment of a receiver, and that the assigned property be subjected to complainants' debts. The court said at page 457, 149 U. S., and page 884, 13 Sup. Ct., 37 L. Ed. 804:

"The principle that a general creditor cannot assail, as fraudulent against creditors, an assignment or transfer of property made by his debtor, until the creditor has first established his debt by the judgment of a court of competent jurisdiction, and has either acquired a lien upon the property, or is in a situation to perfect a lien thereon and subject it to the payment of his judgment, upon the removal of the obstacle presented by the fraudulent assignment or transfer, is elementary. Waite on Fraud. Con. § 73, and cases cited. The existence of judgment, or of judgment and execution, is necessary, first, as adjudicating and definitely establishing the legal demand; and, second, as exhausting the legal remedy."

In Hollins v. Brierfield Co., 150 U. S. 371–378, 14 Sup. Ct. 127–130, 37 L. Ed. 1113, it is said:

"The plaintiffs were simple-contract creditors of the company. Their claims had not been reduced to judgment, and they had no express lien by mortgage, trust deed, or otherwise. It is the settled law of this court that such creditors cannot come into a court of equity to obtain the seizure of the property of their debtor, and its application to the satisfaction of their claims."

Digitized by Google

See, also, Putney v. Whitmire (C. C.) 66 Fed. 388; Tompkins v. Catawba Mills (C. C.) 82 Fed. 782, 783; First National Bank v. Prager, 91 Fed. 692, 34 C. C. A. 51.

It is seemingly contended by the appellee that the bankruptcy act gave jurisdiction of this cause to the Circuit Court. But we find nothing there which can avail the appellee. It is doubtful, from this record, whether the bankruptcy proceeding had been instituted before the amendment to the act took effect. But the question is of no importance. Neither the original bankruptcy act nor the amendment seems to us to afford any ground for the contention of the appellee. The original act (section 23a, Act July 1, 1898, c. 541, 30 Stat. 552, 553 [U. S. Comp. St. 1901, p. 3431]) relates only to controversies between the trustee in bankruptcy and adverse claimants to property acquired or claimed by the trustee. So, also, 23b relates only to suits brought by trustees in bankruptcy. And the amendment, if applicable here, likewise only applies to suits by trustees in bankruptcy.

The court below was plainly right in sustaining the demurrer and in dismissing the cause. We are of opinion, however, that the learned trial court inadvertently erred in decreeing that the expenses of the receiver should be paid out of the proceeds of sales, and also in directing that the property and funds in controversy be put into the possession of the trustee in bankruptcy. We are of opinion that the court below should have decreed the restoration of the property and funds to the Viquesneys, and should have directed that the expenses of the receiver be paid by the complainant below.

The decrees appealed from will be reversed in the respects above mentioned, and the cause remanded. Reversed.

(131 Fed. 25.)

NORTHWESTERN COMMERCIAL CO. v. BARTELS.

(Circuit Court of Appeals, Ninth Circuit. May 3, 1904.)

No. 1,001.

1. MARITIME LIENS—LOSS BY LACHES—SALE IN PROCEEDINGS IN STATE COURT.
   It seems that under the admiralty law applicable to the enforcement of liens the holder of a maritime lien, who participates in a proceeding in a state court which results in a sale of the vessel at his instance, loses his lien, if not by estoppel, at least by laches.

2. SAME—ESTOPPEL TO ENFORCE.
   Libelant, who was entitled to a lien on a schooner for salvage services and wages as master, filed his claim in receivership proceedings in a state court, and it was allowed. He consented to a sale of the vessel, and urged a corporation to bid, giving its officers to understand that his claim would be settled from the proceeds. He acquiesced in the sale to such corporation, and in the delivery of the vessel thereunder, and after the sale was confirmed asserted the priority of his claim to the proceeds, and only withdrew his claim after another lien, which exhausted the fund, had been given preference. *Held*, that he was estopped by his conduct to enforce his lien against the vessel in admiralty as against the purchaser.

¶ 1. Waiver and extinguishment of maritime liens, see note to The Nebraska, 17 C. C. A. 102.

See Maritime Liens, vol. 34, Cent. Dig. § 87.

Digitized by Google

Appeal from the District Court of the United States for the Northern Division of the District of Washington.

On April 5, 1902, the appellee filed his libel against the schooner Lilly L. to subject her to his claim of lien for services performed in Grantly Harbor in the summer of 1901, at the request of the managing owner thereof, in getting said vessel off the beach and afloat, and for services rendered as master and navigator in bringing her from Port Grantly to Seattle in the fall of that year, all of which services were claimed to have been rendered under an oral agreement with said managing owner, by which the appellee was to be paid at the rate of $100 per month, amounting in all to $786.60, and to have a lien on said vessel therefor. The appellant, as claimant of the schooner, answered, denying some of the material allegations of the libel, and alleging that in December, 1901, an action was instituted in the superior court of Washington for King county by the copartners and owners of said schooner, alleging that the schooner was out of commission, and depreciating in value, and praying that a receiver be appointed to sell her and to wind up the partnership affairs; that on December 20, 1901, a receiver was duly appointed for said vessel; that he gave due and proper notice of his appointment to all creditors and claimants; that on February 1, 1902, the appellee filed with said receiver his claim for services as it is now set forth in his libel; that the claim of the appellee was received by the receiver, and by him filed and allowed; that on February 8, 1902, with the consent of all parties to that action and of the appellee and his attorneys, an order was made directing the sale at public auction of the said vessel, and on March 1, 1902, it was sold to the appellant herein, who was the highest bidder therefor; that said sale was made without protest on the part of the appellee or any person, the said appellee being then and there informed of the sale, and approving and ratifying the same, and that at the time of the sale he informed the appellant that, if it would buy said vessel, he would not claim, and did not claim, any lien against the same for wages or otherwise; that the said appellant purchased said vessel without the knowledge or information that the appellee claimed or expected to claim any lien against the same for work done and performed previous to the sale of said vessel at the receiver's sale, and under the distinct understanding and statement from him that he did not have, nor would he attempt to enforce, any claim or lien against said vessel; that said sale was afterwards confirmed and approved, and that upon a hearing had in said superior court on April 2, 1902, at which hearing the appellee was represented by his attorneys, it was adjudged that the claim of one J. Clark of $476.40 for services performed in repairing said vessel while she was lying on the ways should be allowed as a first lien on the fund derived from the sale; that on April 5, 1902, after the state court had directed the entry of an order in accordance with its judgment, but before the order was signed, the appellee appeared by his attorneys, and upon motion, by leave of the court, withdrew his claim. Exceptions to this answer were filed by the appellee, and they were overruled. Thereafter testimony was taken, and the court adjudged that the appellee had alleged and proved facts sufficient to entitle him to salvage compensation in the sum of $400, with interest, and that the vessel be sold to satisfy the same.

The following facts are established by the evidence: The vessel arrived at Seattle in the latter part of October, 1901. In December following the receiver was appointed in the suit in the state court. At that time, and until after the sale of the vessel, she was lying out of the water, and on the marine ways. The appellee's claim was filed with the receiver on February 1, 1902, and was thereupon allowed. The order of sale was made on February 8th. On March 1st the vessel was sold at public auction to the appellant for $502, and on March 8th the sale was confirmed. On April 2, 1902, the question of the priority of liens upon the fund in the hands of the court for distribution was heard before the superior court. The appellee was present, and testified before the court concerning his services and the items of his claim. His attorneys urged that his claim was a first lien upon the fund after payment of the receiver's costs and expenses. Clark, who made the last repairs on the vessel, contended that his claim was superior to that of the appellee. The court, at the conclusion of the hearing, rendered an oral decision adjudging the lien of

Digitized by Google

Clark to be superior, and the claim of the appellee to be second thereto, and directed that a judgment order be made accordingly. On April 5th, and before the judgment order was presented to the court for signature, the appellee, by his attorneys, upon an ex parte application, obtained leave of the court to withdraw his claim, and thereupon withdrew it. The testimony pertaining to the defense pleaded by the appellant is, in substance, as follows: John Rosene, president of the appellant, testified that the appellee came to his office in Seattle several times after it had been decreed that the schooner be sold, requested him to become a bidder, and gave him to understand that he had a claim against the schooner, and that he desired to have the sale made, and to have some person bid in competition with Clark, who also had a lien; that at the day of the sale the witness was present, and had bid $400, and had decided to make no further bid, when the appellee urged him to bid more, whereupon he bid $502, and the vessel was struck off to him. He further testified that at the time of the sale, before buying, in the presence of the appellee, he made inquiry of the receiver concerning the condition of the vessel as to liens or claims against it, and whether or not all parties who had or claimed to have such liens or claims were included in the proceedings, and that the receiver answered him that, so far as he knew, all claims against the vessel were included in the proceedings. The appellee testified that before the sale he had a conversation with Mr. Williams, an officer of the appellant company, in which he told Williams that he thought the vessel would sell for about a thousand dollars, and that Williams said, "Then you will get all the money," and that the witness answered: "Pretty close to that besides what the receiver will get. * * * I stated to him that I calculated to get my money out of that vessel, no matter what became of her, or who would buy her; and I told him if they would buy her the money would come to me—what she was sold for; and he was satisfied to that effect." He testified further that on the day of the sale he informed Mr. Rosene that he had a $786 bill against the vessel, and that Rosene said, "This will come out of this sale when they sell her," and that he replied, "I don't know where it is going to come out, but that is the claim that I have against the vessel." The receiver testified that he did not hear the conversation between the appellee and Rosene at the time of the sale, but that they were there together, and during the bidding the appellee "frequently spoke, or rather whispered, to Rosene—spoke low." Trenholme, the secretary of the appellant, testified that some time prior to the sale the appellee came to the office of his company to induce the company to buy the boat, and stated that liens had been filed with the receiver, and that she was going to be sold, and that among other claims was his own; that he came in repeatedly to induce the company to bid; that he stated that Mr. Clark "had trumped up a claim for repairs that was not done, and for the use of the ways at Ballard, and that he would like to see Mr. Clark beaten out of his claim." There was no denial of any of the foregoing testimony. The only evidence concerning the value of the schooner was that of the appellee, who estimated it at $1,000, and that of Trenholme, who testified that it was of no value whatever.

John P. Hartman, for appellant.

Greene & Griffiths, for appellee.

Before GILBERT and ROSS, Circuit Judges, and HAWLEY, District Judge.

GILBERT, Circuit Judge, after stating the case as above, delivered the opinion of the court.

The contention that the proceedings in the state court and the sale thereunder bar the present suit presents a question that has not been directly met by any decision of the Supreme Court. It is undoubtedly true that the fact that a libelant has already brought suit in a state court for the same claim is no bar to a subsequent proceeding in admiralty. The Highlander, 1 Sprague, 510, Fed. Cas. No. 6,476; The Kalorama,

Digitized by Google

10 Wall. 218, 19 L. Ed. 941. But it would seem that, if the proceedings in the state court have proceeded so far that a sale has been had upon its judgment, it would operate as a waiver of the lien, provided that the court assumed to sell the entire vessel and all rights and interests therein. In The Kalorama, the court, referring to the suggestion that the lien was waived by the commencement of an action for the same claim in the state court, said:

"But the record shows that the action is still pending, and it is well-settled law that the pendency of such an action is no bar to a suit in a federal court. Had the judgment been rendered, it might have been different."

In Moran v. Sturges, 154 U. S. 277, 14 Sup. Ct. 1025, 38 L. Ed. 981, the court said:

"If, then, the receiver had first taken actual possession of these vessels and sold them, such sale would not have cut off maritime liens and the right to have them enforced; and while it may be true that the state courts exercising equitable jurisdiction might undertake in the distribution of property to save the rights of holders of maritime liens, yet it is certain that those courts would have no power by a sale under statute to destroy their liens, unless they had voluntarily submitted themselves to that jurisdiction."

The inference to be drawn from this language of the opinion is that, if the lienholders had submitted themselves to the jurisdiction of the state court, the sale would have divested the vessel of their liens. In The Resolute, 168 U. S. 441, 18 Sup. Ct. 112, 42 L. Ed. 533, Mr. Justice Brown said:

"Did the order direct these vessels to be sold free of maritime liens or subject to them, or was it silent in this particular? Were the lienholders upon these vessels paid from the purchase money according to their relative rank as they would have been had the sale been conducted by a court of admiralty? If they were, that would amount to very strong, if not conclusive, evidence against the subsequent endeavor to enforce the liens in a court of admiralty."

In Dudley v. The Superior and Sexton v. The Troy, 1 Newb. Adm. 176, Fed. Cas. No. 4,115, certain holders of maritime liens and nonmaritime liens seized the vessels subject thereto by process from the state courts. Afterwards the boats were sold under the order of the court of admiralty, and the proceeds paid into the registry thereof. Holders of the nonmaritime liens asserted the right to share equally in the funds with those who held liens originally maritime, and who had not made seizures under the state law. The court expressed the view that a party who has voluntarily waived his admiralty lien and resorted to the local law for his indemnity and protection could not resume his lien at his pleasure, and thereby be reinstated in his original rights. So, in Stapp v. Steamboat Swallow, 1 Bond, 190, Fed. Cas. No. 13,305, it was said:

"It is, however, clearly consonant with reason and the analogies of law that if a party having an undisputed maritime lien voluntarily waives it by seeking another remedy he cannot be reinstated in his original right."

A case directly in point is The Mary Morgan (D. C.) 28 Fed. 196–202, in which the court said:

"I can recall no instance in which a creditor may sell his debtor's property a second time for the same debt. He invites the public to purchase, proposing

Digitized by Google

to take the proceeds while the purchaser takes the property. How can he afterwards, in effect, claim the property also?"

It would seem, in view of these decisions and expressions of the court, that under the admiralty law applicable to the enforcement of liens one who participates in such a proceeding in a state court resulting in a sale at his instance, loses his lien, if not by estoppel, at least by laches. The Seminole (D. C.) 42 Fed. 924.

But aside from the question of estoppel by the judgment and sale under the proceedings of the state court or the laches of the appellee, we think his conduct and representations to the appellant estop him now to assert a lien against the vessel. He duly presented his claim to the receiver in the state court, and his claim was allowed. After that court had ordered the sale of the vessel, he went to the officers of the appellant, and urged them to become purchasers at the sale. At the time of the sale he was present, conferring with the president of the appellant; and when the latter inquired of the receiver if all claims against the vessel were included in the proceedings, and the receiver replied that they were, the appellee made no denial of that statement. A month later, and after the sale had been confirmed, he appeared with his attorneys before the state court, and he testified concerning his claim and the items thereof. It was not until the court had announced its decision adjudging Clark's lien to be prior to his that the appellee withdrew his claim. He testified in the present case that prior to the sale he stated to Williams, the treasurer of the appellant, that he thought the vessel would sell for about a thousand dollars, and that he would get practically all the proceeds after payment of the receiver, and that he further said that, if the appellant would buy her, the money that she was sold for would come to him, and that Williams "was satisfied to that effect." In what plainer language could he have informed the appellant that his claim was included among those for the satisfaction of which the vessel was to be sold? The force of his statement to Williams is not modified by the fact that he testified that he further said that he calculated to get his money out of that vessel, no matter what became of her, or who would buy her. The plain inference to be drawn from all that he said was that he looked to the proceeds of that sale to satisfy his lien, and that Williams was satisfied to that effect. He does not deny that he told the secretary of the appellant that liens had been filed with the receiver, and that the schooner was going to be sold, and that among other claims was his own. The learned judge of the District Court was of the opinion that, if the proof showed that the appellee induced the claimant to purchase the vessel by making a verbal agreement to relinquish his claim and to look to the purchase money, and that the amount bid was sufficient to pay him any considerable part of the amount which he was justly entitled to receive, there would be substantial ground for an estoppel, but that there could be no estoppel from the facts proved for the reason that the amount bid was not sufficient to pay him anything. We think that the fact that the amount bid was not sufficient under the order of distribution made by the state court to pay the appellee anything is wholly immaterial to

Digitized by Google

the question under discussion. The estoppel consists in the appellee's conduct and representations and the act of the appellant thereby induced. It is in no way affected by the subsequent disposition of the money, or by the fact that the expectation of the appellee was not realized. The appellant had the right to rely on his representations. It became the purchaser at his instance, and upon his assurance that his claim was one for the payment of which the vessel was being sold.

We are not unmindful of the general rule that the lien of a seaman for his wages is under the protection of courts of admiralty, and that nothing short of absolute payment, or some act on his part showing an intelligent intention to waive his lien, shall be construed as a waiver thereof, and that courts of admiralty take notice of the improvidence, the ignorance, and the guilelessness of seamen, and protect their interests. But we see no place for the application of the rule to the present case. A mariner who for 15 years has had experience as a master and navigator of vessels can hardly be said to come into court in the attitude of a ward of the admiralty. There is nothing in this case to show that the appellee was overreached, or unjustly dealt with. He was represented in the proceedings in the state court by able counsel, and he appears to have been fully capable of taking care of himself. His chief solicitude seems to have been to obtain a bidder upon the vessel for his own benefit, and to exclude the claim of the other lienholder. There can be no doubt of the power of a seaman to release his claim of lien if the release is made upon adequate consideration, or upon some corresponding benefit resulting to him. The International (D. C.) 30 Fed. 375. In the Olive Mount (D. C.) 50 Fed. 563, Nelson, District Judge, held that seamen who had authorized the owner of their vessels to make settlement in their behalf of all claims for salvage could not, after such settlement, collect against the salved property. Said the court:

> "They all had knowledge of the negotiations going on between the owners of the vessel and the company for the settlement, but they made no objections, set up no separate claim, nor asked nor expected to be consulted. The vessel also was delivered up to the owners without objections from them. They claimed their share after the money was paid, and it was only after their failure to come to an agreement with the company that they brought this suit. Their demand on the company ratified the settlement even if no previous authority had been given."

So in the present case it appears that the appellee participated in the proceedings in the state court, consented to the sale of the vessel, urged the appellant to become a purchaser, gave it to understand that his claim was to be settled by the purchase money, acquiesced in the sale after it was made and in the delivery of the vessel to the appellant, and made no objection to any of the proceedings until he found that the claim of Clark, whom he specially desired to exclude from participation in the fund, had been adjudged to be superior to his own. Every consideration of justice and fair dealing leads to the conclusion that these facts constitute an estoppel in pais.

The objection is made that the answer is not so framed as to present the defense of estoppel. No objection was interposed to the testimony on that ground. The court below considered it as one of

Digitized by Google

the defenses in the case, and we are justified in so regarding it here. It is the facts pleaded that constitute an estoppel in any given case, and not the term by which the defense may be designated.

The decree of the District Court is reversed, and the cause is remanded, with instruction to dismiss the libel.

(131 Fed. 81.)

DAVIS et al. v. A. BOOTH & CO.

(Circuit Court of Appeals, Sixth Circuit. August 2, 1904.)

No. 1,310.

1. SALES—GOOD WILL—EQUITY—JURISDICTION—MULTIPLICITY OF SUITS.
   Equity has jurisdiction to restrain the violation of an agreement entered into as a part of the sale of a business, by which the persons interested therein agreed not to again engage in business in certain localities for a definite time, because of the difficulty in estimating the damages accruing, and to prevent a multiplicity of suits.

2. SAME—VALIDITY OF CONTRACT—PUBLIC POLICY.
   An agreement by which the stockholders of a corporation, on selling its assets to complainant's assignor, agreed not to again engage in a similar business in specified localities for a period of 10 years, or do any act tending to impair the good will of the business sold, was not contrary to public policy.

3. SAME—ANTI-TRUST ACT.
   Where a corporation engaged in the business of buying and selling fish sold out its assets and good will to plaintiff's assignor, and the seller no longer retained any interest in the property, so that the sale was not a mere combination of owners and properties under one management, the sale was not in violation of the federal anti-trust act of July 2, 1890, c. 647, 26 Stat. 209 [U. S. Comp. St. 1901, p. 3200], prohibiting contracts in restraint of trade, though the contract might incidentally or in some remote degree injuriously affect interstate commerce.

4. SAME—STATE STATUTES—CONSTRUCTION.
   3 How. Ann. St. § 9354j, denominated an act prohibiting certain trust combinations, and providing that all contracts, the purpose or intent of which shall be in any manner to prevent or restrict free competition in the sale of any article or commodity, or in any other branch of business or labor, shall be utterly illegal and void, provided that it shall not invalidate or affect contracts for the sale of the good will of a trade or business, does not prohibit a contract for the sale of a business where it was not intended that the seller should thereafter have any interest in the property, or an agreement by which the seller's stockholders contracted not to again engage in a similar business in competition with the buyer in certain places for a specified time.

5. SAME—RESTRAINT OF COMPETITION.
   An agreement ancillary to a sale of a corporation's business, by which the stockholders, who received the purchase price, agreed that, in order to protect the good will of the business so sold, they would not either directly or indirectly engage in the same business within certain distinct limits for a period of 10 years, was not void, as an unreasonable restraint of competition in trade, at common law.

6. SAME—CONSTRUCTION.
   Where a contract ancillary to the sale of a business provided that the stockholders of the seller would not again engage in a similar business

---

¶ 1. See Injunction, vol. 27, Cent. Dig. § 121.

Digitized by Google

for a period of 10 years in the territory, or the immediate vicinity of the territory, dealt in by the corporation, or operated in by it or its agents, or the immediate vicinity of such territory, the localities guarded against were restricted to those in which the selling company had establishments for doing business, and the immediate vicinity thereof, and did not include all parts or every one of the United States in which a former customer resided, or into which the corporation's correspondence had extended, or through which an agent of the company had traveled.

Appeal from the Circuit Court of the United States for the Eastern District of Michigan.

For opinion below, see 127 Fed. 875.

Edward E. Kane and Fred A. Baker, for appellants.

Henry M. Duffield and Charles S. Thornton, for appellee.

Before LURTON, SEVERENS, and RICHARDS, Circuit Judges.

SEVERENS, Circuit Judge. The object of this bill filed in the Circuit Court by the appellee, A. Booth & Co., was to obtain an injunction against the appellants to restrain them from violating an agreement made by them with William Vernon Booth, to the benefits of which the appellee claimed to be entitled. It states: That the complainant is a corporation organized under the laws of Illinois on August 1, 1898, with a capital of $5,500,000, for the purpose of buying, catching, and selling fish, and having its general office at Chicago. That the Davis Fresh & Salt Fish Company was a corporation organized under the laws of Michigan for a similar business, with headquarters at Detroit. That on or about August 14, 1898, the last-named company, for the consideration of $17,473.14, sold all its properties, including the good will of its business conducted at Detroit, and gave a bill of sale, with warranty of title, to William Vernon Booth, on September 14, 1898, and Davis gave a personal guaranty of the contract of sale. That, as an inducement to the sale, Davis and the other stockholders of the selling company entered into the following agreement:

"This instrument witnesseth, that William Vernon Booth has purchased the plant, business and good will of the business of the Davis Fresh & Salt Fish Co., and has paid therefor the sum of $17,473.14; that in making said transfer, and as an inducement to said William Vernon Booth to purchase said plant, business and good will and pay the sum aforesaid for the same, we each have agreed that we would not, and we now do agree, each for himself, jointly and severally with him, the said William Vernon Booth, his heirs and assigns, forever, that we will not, during the next ten years, in the territory or the immediate vicinity of the territory dealt in by our company, or operated in by ourselves or the agents or employees of the company engage or in any manner be interested in, either directly or indirectly, for ourselves or for others, the same or like kind or character of business as that heretofore conducted and now being carried on by said company, its officers, agents, employees and assigns, and that we will not, during the said period of ten (10) years, either directly or indirectly, be guilty of any act interfering with the business, its good will, its trade or its customers, or come in competition with the same; and we will not, jointly or severally either in firms or corporations, or as individuals or in any other way, directly or indirectly interfere with the said trade or business, or do any act prejudicial to the same or any part thereof, or interfere with the persons employed therein; the meaning hereof being that the said William Vernon Booth is buying and paying for the good will of the business in the largest and fullest scope of the term; and that we will not, and each agrees that he will not, do anything to interfere

Digitized by Google

with or injure the said business, but will, during said period, lend his aid and best influence to the promotion and advancement of the same.

"In witness whereof, we hereunto subscribe our names and affix our seals, jointly and severally, this first day of August, A. D. 1898.

"Edgar A. Davis.
James T. Donaldson.
Belle R. Harper.
Ed. E. Kane.
Belle B. Davis."

—Which agreement was delivered and the consideration of $17,473.14 paid on September 14, 1898, and said consideration was then distributed among the stockholders of the selling company. That on September 27, 1898, said William Vernon Booth, for a valuable consideration, sold to the complainant all the properties so purchased of the Davis Fresh & Salt Fish Company, including the good will of the business, and assigned to said complainant the above-quoted agreement of the stockholders of said last-mentioned company. That at the time of its sale to William Vernon Booth the Davis Fresh & Salt Fish Company was conducting its business not only at Detroit, but in the following named places—either selling to regular customers, or having established agencies there—namely: "Cincinnati, Cleveland, Columbus, and Dayton, in the state of Ohio; Louisville, Kentucky; Nashville, Tennessee; St. Louis and Kansas City, Missouri; Buffalo and New York City, in the state of New York; Grand Rapids, Jackson, East Saginaw, Battle Creek, Lansing, and Port Huron, in the state of Michigan." That Davis became an employé of the complainant, but after a time withdrew, and with Delos Cook, Michael J. Dee, and Alva M. Hungerford organized a limited partnership under the laws of Michigan, and filed a certificate thereof in the office of the clerk of the county of Wayne, in that state. That on August 26, 1898, the complainant made a similar purchase of the E. A. Edson Company, an Ohio corporation doing a similar business at Cleveland, and also at Detroit, and that Edson, its president, made a similar agreement with that of the stockholders of the Davis Fresh & Salt Fish Company, and that it made a like purchase of the Buffalo Fish Company, a New York corporation, and obtained a similar agreement form its stockholders. That Davis, after leaving complainant, organized the Gopher Fish Company in opposition to complainant, at St. Paul, Minn., and induced Donaldson, who was one of the signers of the agreement of the Davis Fresh & Salt Fish Company stockholders, who was subsequently in the employment of the complainant, to take charge of the said Gopher Fish Company, and also induced Hungerford, another of said signers, to leave complainant and become bookkeeper of the Wolverine Fish Company. That Davis and Edson made public announcement that they intended to "fight complainant in a business way," and intended to organize corporations in Detroit, Cleveland, New York and other places, which should be under one control, and act together in business policy, and fix prices for the purchase and sale of fish, whereby they could better promote the interests of the public, and that they caused to be published in leading journals articles (which are copied into the bill) indicating that they intended to carry on, or cause to be carried on, a strong competition with the complainant in

Digitized by Google

the fish business. That they characterized the complainant as a "trust," the contrary of which the complainant avers to be the fact, and it vouches a decision of the Supreme Court of New York to that effect. That Davis, Edson, and another have entered actively into the fish business in the territory, and the vicinity of the territory, dealt in by their respective corporations, in violation of their agreements, and organized companies to prosecute said business at New York, Cleveland, and Detroit. That the Wolverine Fish Company was organized by Davis to more conveniently violate his agreement, and has been and now is conducting and threatens to conduct its business in a manner calculated to injure the complainant, and render the good will purchased of his company valueless. That he interferes with its business, trade, and customers. That he solicits consignments of fish and makes purchases thereof from the former customers of his company, and has in many instances drawn away such customers to the Wolverine Fish Company, and that Edson, Hungerford, and Dee are assisting him. That Davis is sending out to the former customers of his company false statements injurious to the complainant's reputation for honesty and fair dealing, which tend to the loss of complainant's business, and that Davis is insolvent, and a judgment against him would be uncollectible; and a considerable number of the statements referred to are set out, the truth of which is denied. And the complainant says it has been greatly injured by this conduct of the defendants, and has sustained already the loss of more than $100,000, and will continue to suffer further irreparable loss unless the defendants are enjoined, etc.

The prayer is that the defendant Davis be compelled to perform his agreement made with William Vernon Booth, and that he—

"And his agents and employés be enjoined during the full term of ten years from August 1, 1898, from engaging or in any manner being interested, directly or indirectly, for themselves or for others, in the city of Detroit, or in the immediate vicinity of any territory dealt in on or prior to August 1, 1898, or operated by the said Davis Fresh & Salt Fish Company, or the defendant Davis, or the agents or employés of the Davis Fresh & Salt Fish Company, in catching, buying, selling, handling, or dealing in any kind of fish or other salt or fresh water food products, in the storage thereof, the manufacture of, or dealing in any manner in fish products, and from engaging in or in any manner being interested in, in the territory aforesaid, any other kind or character of business, the same as or like that conducted and carried on by the Davis Fresh & Salt Fish Company on and prior to August 1, 1898, or by its officers, agents, employés, or assigns, and from soliciting or inviting, in the territory aforesaid, other persons to buy from or sell to or otherwise deal with them, or either of them, in said business aforesaid, and from interfering with the business formerly transacted by the Davis Fresh & Salt Fish Company, and by it sold, assigned, and transferred to William Vernon Booth, its good will, its trade, or its customers, and from coming into competition with this complainant's business in the city of Detroit and vicinity, and wherever the business of the Davis Fresh & Salt Fish Company extended at the time of its sale to and contract with said Booth, and from interfering in any way, directly or indirectly, with the said trade or business, and from doing any act prejudicial to the same, or any part thereof, and from interfering with the persons employed in the service of this complainant, and from using their aid or influence in regard to this complainant's trade or business, otherwise than for the promotion and advancement of the same, and that the said defendants Eugene R. Edson, Alva M. Hungerford, Michael J. Dee, and Wolverine Fish Company, Limited, their agents, servants, and employés, be enjoined during the full period of ten years from August 1, 1898, from aiding the said Edgar

Digitized by Google

A. Davis or participating with said Davis in and otherwise, directly or indirectly, interfering with the business of the complainant, or with the persons employed therein, and from using their aid and influence in connection with the said Davis, otherwise in regard to complainant's trade or business, otherwise than for the promotion and advancement of the same, and that the said Edgar A. Davis, Eugene R. Edson, Alva M. Hungerford, Michael J. Dee, and the Wolverine Fish Company, Limited, be so enjoined and restrained during the pendency of this action; and that this complainant recover from the said defendants such sum as, upon a proper accounting, the complainant may show it has been damaged by reason of the wrongful action of the said defendants, and for such other and further relief as to the court may seem fit."

Many affidavits and exhibits were attached to the bill in support thereof. We have stated the contents of the bill with considerable fullness, in order to show the scope of the controversy.

The complainant moved for a preliminary injunction. All the defendants except Edson, who was not served or did not appear, answered the bill, and filed a large number of affidavits of other persons in opposition to the motion—so many that we cannot take space to array them. It is sufficient to say that the answers and affidavits raise a conflict of proof in reference to several of the matters stated in the bill and the affidavits accompanying it. The arguments made here, in the main, proceeded upon the broader aspects of the controversy. Besides, having regard to the practice which obtains in this class of appellate proceedings, we should not go into a nice balancing of proof or estimate of particulars. This being an appeal from an order granting a preliminary injunction, unless we should see that the court below had fallen into a positive mistake in regard to some important fact, we should not disturb its findings, and it is not claimed that such a mistake has happened. The court below granted this preliminary injunction by the order following:

"Now, therefore, we strictly command and enjoin you, the said Edgar A. Davis, your attorneys, solicitors, clerks, servants, and agents, under the penalties that may follow on you in case of disobedience, that you forthwith, and until the further order of this court, desist from engaging or in any manner being interested, directly or indirectly, for yourself and for others, in the city of Detroit, or in the immediate vicinity of any territory on or prior to August 1, 1898, dealt in or operated by the Davis Fresh & Salt Fish Company, described in the bill of complaint in this cause, or the defendant Davis, or the agents or the employés of the said Davis Fresh & Salt Fish Company, in catching, buying, selling, handling, or dealing in any kind of fish, or other salt or fresh water food products, in the storage thereof, the manufacture of or dealing in any manner in fish products, and from engaging in, or in any manner being interested in, in the territory aforesaid, any other kind or character of business, the same as or like that conducted and carried on by the Davis Fresh & Salt Fish Company on and prior to August 1, 1898, or by its officers, agents, employés, or assigns, and from soliciting or inviting, in the territory aforesaid, other persons to buy from or sell to or otherwise deal with you or the Wolverine Fish Company, Limited, or either of them, in said business aforesaid, and from interfering with the business formerly transacted by the Davis Fresh & Salt Fish Company, and by it sold, assigned, and transferred to William Vernon Booth, its good will, its trade, or its customers, and from coming into competition with this complainant's business in the city of Detroit and vicinity, and wherever the business of the Davis Fresh & Salt Fish Company extended at the time of its sale to and contract with said Booth, and from interfering in any way, directly or indirectly, with the said trade or business, and from doing any act prejudicial to the same or any part thereof, and from interfering with the persons employed in the service of this complainant, and

Digitized by Google

from using your aid or influence in regard to this complainant's trade or business, otherwise than for the promotion and advancement of the same. And now, therefore, we strictly command and enjoin you, the said Alva M. Hungerford, Michael J. Dee, and the Wolverine Fish Company, Limited, your attorneys, solicitors, clerks, servants, and agents, under the penalty that may follow in case of disobedience, that you are forthwith and until the further order of this court to desist from aiding the said Edgar A. Davis, or participating with said Davis in, directly or indirectly, interfering with the business of the complainant, or with the persons employed therein, and from using your aid and influence in connection with the said Davis or otherwise in regard to complainant's trade or business acquired under the said contract, otherwise than for the promotion and advancement of the same."

The defendants appeal from this order.

1. It is assigned as error that the court held the bill of complaint to state a case entitling the complainant to relief by injunction; and it is argued that the proper remedy is by an action at law, and further that public policy is opposed to the enforcement of such contracts. With regard to the objection that there is a remedy at law, it is quite clear that the difficulty in estimating the damages in such a case, and the succession of causes of action and the multiplicity of suits likely to ensue, furnish ample reasons for the exercise by a court of equity of its power to restrain the continuance of the supposed wrongdoing. And if the contract is not one which should be held by the court unlawful as opposed to public policy, there is no sufficient reason for withholding relief. We are referred to the case of Bensley v. Texas & Pac. Ry. Co., 191 U. S. 492, 24 Sup. Ct. 164, 48 L. Ed. 274, as conclusive of the validity of this objection. A railroad company had entered into a contract that it would not establish another depot within three miles of one agreed to be built upon the plaintiff's land. Upon a bill filed to restrain the company from establishing a depot within that distance, as ordered by the State Railroad Commission, it was held that the injunction should not be allowed. The decision was rested upon the ground that the railroad company was by reason of its charter bound by a public duty in regard to the location of its depots, which it ought not to be permitted to disable itself from performing. In the present case the parties to the contract were private parties, upon whom no public duty was imposed, other than such as rest upon all private individuals. The ground upon which the decision cited was based is wholly absent here. In the case of Norcross v. James, 140 Mass. 188, 2 N. E. 946, the contract sought to be enforced was a merely personal covenant, and did not run with the land subsequently conveyed to the defendant. Whether the contract in question is void in law, upon the ground that it is in restraint of trade or competition in trade, is a question which will be discussed further on.

2. One of the principal grounds upon which it is urged for the appellants that the agreement in question is void is that it was an agreement in restraint of trade, in violation of the anti-trust act of July 2, 1890, c. 647, 26 Stat. 209 [U. S. Comp. St. 1901, p. 3200]. But that act, as was held in United States v. E. C. Knight Co., 156 U. S. 1, 15 Sup. Ct. 249, 39 L. Ed. 325, is leveled against contracts which have a direct relation to interstate commerce, and does not extend to contracts which may incidentally or in some remote way come into relation with, or become the source of, interstate traffic. In that case a New Jersey

Digitized by Google

corporation, being already in control of a large majority of the sugar refineries in the United States, acquired the control, by a purchase of their stock, of four Philadelphia refineries, and the question was whether such an acquisition was a violation of the anti-trust act. It was not doubted that the sugar refined there would, to a large extent, at least, become the subject of interstate traffic, but such traffic was not the subject directly involved. We think there is nothing in the anti-trust act which rendered unlawful the purchase by William Vernon Booth and his transfer, to A. Booth & Co., of the plant of the Davis Fresh & Salt Fish Company, or which necessarily rendered invalid the agreement of the stockholders of the latter company, which was ancillary to the contract of sale. Nor can this conclusion be affected by the fact that A. Booth & Co. also purchased other plants and stocks to an extent that tended to create a power to monopolize the fish market. There is a clear distinction, which seems to be lost sight of in the argument here, between the aggregation of properties by purchase when the seller no longer retains an interest in the property, and a combination of owners and properties under one management, where each owner's interest is continued in the combination. To this latter class belongs the case of Merz Capsule Co. v. United States Capsule Co. (C. C.) 67 Fed. 414, affirmed in 71 Fed. 787.[1] It may be that the practice of acquiring by a single corporation, through purchase of a great number of single plants in several states, of power to control the market of a given commodity in a wide area of territory, may become injurious to the public; but, if so, it would seem that the limitations and the means for the restriction and correction required must be supplied by the lawmaking power, since the old law against forestalling the market has become obsolete. It is possible that it may be developed at the final hearing that interstate traffic may be directly involved in this agreement. But if so, it will be prudent to postpone final decision in respect to the consequences thereof upon the validity of the agreement until the case is presented upon full proof, rather than by ex parte affidavits as now.

3. It is further contended that the contract was rendered void by the statute of Michigan of 1889, which enacted that:

> "All contracts * * * the purpose, object or intent of which shall be * * * in any manner to prevent or restrict free competition in the sale of any article or commodity produced by mining, manufacture, agriculture or any other branch of business or labor, shall be utterly illegal and void * * * provided, however, that this section shall in no manner invalidate or affect contracts for what is known and recognized at common law and in equity as contracts for the good will of a trade or business."

But that act contained a proviso excepting certain classes and subjects which rendered it of doubtful constitutionality. Such legislation was held void in Connolly v. Union Sewer Pipe Co., 184 U. S. 540, 22 Sup. Ct. 431, 46 L. Ed. 679, and the Michigan statute was amended in 1899, which was after this transaction, so as to remove the objection. The act of 1889 is denominated in 3 How. Ann. St. § 9354j, as one prohibiting "certain trust combinations," and we have no doubt it was intended for such cases. We think that the intent which made the contract or combination unlawful was one in which both parties participated, and that the act was not intended to comprise a case where there was a sale

[1] 19 C. C. A. 108, 31 L. R. A. 415.

Digitized by Google

and purchase of property, after which the seller should have no interest in the property, and therefore would have no intent as to its further use. The act of 1899 is subject to the same construction, but, as it would not render unlawful a contract which had been lawfully made, we need not consider it further.

4. But finally it is insisted that the stipulation in question contained in the agreement of date August 1, 1898, is void at common law, for the reason that it is an unreasonable restraint of competition in trade. The agreement was ancillary to the contract of sale made by the Davis Fresh & Salt Fish Company, in which these stockholders had the entire interest, and of the fruits of which sale they were the beneficiaries. That contract expressly included the good will of the business of the seller, and the stipulation of the stockholders was made, as it recites, to induce the sale; and it was for the protection of the vendee in the enjoyment of it, and, as it seems to us, would pass by the transfer of the property, business, and good will to William Vernon Booth's vendee, to whom the agreement was also assigned. The question of the reasonableness of such a stipulation is one which was elaborately discussed by Judge Taft in delivering the opinion of this court in United States v. Addyston Pipe & Steel Co., 85 Fed. 271, 29 C. C. A. 141, 46 L. R. A. 122. It would be useless to reiterate the grounds and reasons upon which it was held that such a stipulation is valid if it goes no farther than to support and protect the interests transferred by the contract of sale. If tested by this rule alone, we think this stipulation should be held valid and obligatory.

But referring again to the distinction already alluded to between an aggregation effected by purchase, and a combination of several owners to pool their business and eliminate competition, it is to be observed that in the present instance it appears that the purchase price paid to the Davis Fresh & Salt Fish Company consisted partly of cash and partly of stock in the corporation of A. Booth & Co., and that therefore the transaction was of a mixed character. This is an aspect of the case which has given us most concern, and in respect of which we are not aware of any decision precisely in point. We are unwilling to decide a matter of so much importance at this preliminary stage of the case, and especially so because no particular attention has been given to it in the briefs and argument of counsel. We purpose, therefore, to give such directions in regard to the continuance of the injunction as will preserve the rights of parties from serious impairment in the interim, and reserve this and another question reserved in another part of this opinion until final hearing.

There are no other questions which seem to require independent discussion, except one which relates to the scope of the injunction awarded by the court below. We are of opinion that the proper construction of the agreement given by the stockholders of the Davis Fresh & Salt Fish Company requires that the description of the localities in which their stipulations should be operative, stated in the writing at the beginning of said stipulations, extends to and qualifies all of them, and that such localities are restricted to those in which the company had establishments for doing business, and the immediate vicinity thereof. It could not mean all parts or every one of the United States in

Digitized by Google

which a former customer resided, or into which its correspondence had extended, or through which some agent of the company had traveled. No definite or reasonable bounds are indicated by the contract, other than those which we have indicated. Besides, the inclusion made by the words "or the immediate vicinity of the territory," etc., implies some place from which the "immediate vicinity" is to be estimated, and excludes the idea of reckoning from some indefinite point. The ordering part of the injunction directed to the Wolverine Fish Company is also too broad, when, in addition to forbidding certain conduct in conjunction with Davis, it proceeds to forbid that company from doing such things "otherwise." The Wolverine Fish Company was a stranger to the Davis agreement, and, as to anything in which he should not participate, it was not affected thereby. The injunction should be modified accordingly. We think, also, that the complainant should be required to give bond to indemnify the defendants from damages arising from the issuance of the writ, in case the bill should not be finally sustained, as a condition to the continuance of the injunction.

With these modifications, the order of the Circuit Court is affirmed. The costs of this appeal will be divided.

(131 Fed. 39.)

GIBSON v. ANDERSON.

(Circuit Court of Appeals, Ninth Circuit. May 3, 1904.)

1. PUBLIC LANDS—INDIAN RESERVATION—AUTHORITY OF PRESIDENT.

The President of the United States, by proclamation, has power to reserve a portion of the unoccupied public lands of the United States for an Indian reservation, notwithstanding Rev. St. § 2319 [U. S. Comp. St. 1901, p. 1424], declaring all mineral deposits in the public lands of the United States and the lands containing the same open to exploration and purchase.

2. SAME—MINERAL LANDS—ENTRY.

Where complainant made certain mining locations on an Indian reservation on May 27, 1902, on which day an act of Congress subjecting mineral lands in the reservation to mineral entry was passed (Act May 27, 1902, c. 888, 32 Stat. 245), but on the same day two joint resolutions (32 Stat. pt. 1, 742, 744) were passed postponing the operation of the act until December 31, 1902, such joint resolutions suspended complainant's right to locate mineral claims on the land under such act.

3. SAME—STATUTES—ENACTMENT—PUBLISHED RECORD—IMPEACHMENT.

Where the published record of joint resolutions of Congress, duly authenticated, showed that the resolutions were approved by the President on May 27, 1902, such record could not be impeached by proof showing that they were not in fact approved until a later date.

Appeal from the Circuit Court of the United States for the Eastern Division of the District of Washington.

The appellant, M. F. Gibson, was the complainant in a suit in equity brought to enjoin A. M. Anderson, the appellee, who is the Indian agent in charge of the Spokane Indian reservation in Stevens county, in the state of Washington, from interfering with certain mining locations situate within the Indian reservation, and located on May 27, 1902. The bill alleges that the locations were made in due compliance with the laws of Congress and the statutes of the state of Washington, but that the appellee claims and maintains that the land whereon they are located was created an Indian reservation by virtue of

Digitized by Google

an executive order of the President of the United States made on January 18, 1881, ordering that the said land be, "and the same is hereby, set aside and reserved for the use and occupation of the Spokane Indians." The bill alleges: That the executive order does not have the effect, as claimed by the appellee, to withdraw the mineral lands within the territory therein described from mineral locations, but that the same remained subject to the provisions of and locations under section 2319 of the Revised Statutes, and that if, by said executive order, any such rights as are contended for by the appellee were established, the same were surrendered by virtue of a treaty stipulation entered into between the United States and the Spokane Indians on March 18, 1887, and ratified by Congress on July 13, 1892, whereby the said Indians, in consideration of the sum of $95,000, agreed to remove to the Coeur d'Alene reservation, there to take allotments in severalty. That, after the making of said treaty and the ratification of the same, the further and continued occupancy of said territory by the Spokane Indians was merely as tenants or occupants at sufferance or at will. That afterwards, in May, 1902, Congress passed an act entitled "An act making appropriations for the current and contingent expenses of the Indian Department and for fulfilling treaty stipulations with various Indian tribes for the fiscal year ending June 30, 1903, and for other purposes" (Act May 27, 1902, c. 888, 32 Stat. 245), which act was signed by the President of the United States, and on May 27, 1902, became a law. That said act contains the following provision: "That the mineral lands only in the Spokane Indian reservation in the state of Washington shall be subject to entry under the laws of the United States in relation to the entry of mineral lands: provided, that lands allotted to the Indians, or used by the government for any purpose, or by any school, shall not be subject to entry under this provision." That subsequently Congress passed joint resolution No. 24 (32 Stat. pt. 1, 742), fixing July 1, 1902, as the time when said act should take effect, except as otherwise specially provided therein, and passed also joint resolution No. 25 (32 Stat. pt. 1, 742), fixing December 31, 1902, as the time when that provision in said act which relates to the subjecting to entry under the mining laws of the United States lands in said Indian reservation, should take effect and be operative, and passed also Joint Resolution No. 31 (32 Stat. pt. 1, 744), which contains the following provision: "The Secretary of the Interior is directed to make allotments in severalty to the Indians of the Spokane Indian reservation in the state of Washington, and upon the completion of such allotments, the President shall by proclamation give public notice thereof, whereupon the lands in said reservation not allotted to Indians, or used and reserved by the government or occupied for school purposes, shall be opened to exploration, location, occupation and purchase under the mining laws." That said last-mentioned resolution purports to have been approved on June 19, 1902. That while joint resolutions 24 and 25 purport to have been approved on May 27, 1902, they were not, nor was either of them, actually approved by the President of the United States until after June 1, 1902. That said mining locations were made upon information received from Washington, D. C., immediately following the approval of said act of May 27, 1902. The bill proceeds to set forth the acts and threats of the Indian commissioner hostile to the appellant's possession of said mining claims, and as to which injunctive relief is sought. The appellee interposed a general demurrer to the bill for want of equity. The court sustained the demurrer, and thereupon rendered a decree dismissing the bill. From that decree the appeal is taken.

H. N. Martin and Happy & Hindman, for appellant.

Jesse A. Frye and Edward E. Cushman, for appellee.

Before GILBERT and ROSS, Circuit Judges, and HAWLEY, District Judge.

GILBERT, Circuit Judge, after stating the case as above, delivered the opinion of the court.

To show that there was equity in the bill, the appellant advances the proposition that the act of Congress embodied in section 2319 of

Digitized by Google

the Revised Statutes [U. S. Comp. St. 1901, p. 1424], declaring all mineral deposits in the public lands of the United States open to exploration and purchase, and the lands containing the same to occupation and purchase, cannot be repealed or suspended by a proclamation of the President. But there is no question here of repealing or suspending the operation of an act of Congress. The question is whether the President could, by proclamation, reserve a portion of the unoccupied public lands of the United States for an Indian reservation. In McFadden v. Mountain View Mining & Milling Company, 97 Fed. 670, 38 C. C. A. 354, this court said:

"There can be no doubt of the power of the President to reserve those lands of the United States for the use of the Indians. The effect of that executive order was the same as would have been a treaty with the Indians for the same purpose, and was to exclude all intrusion upon the territory thus reserved by any and every person other than the Indians for whose benefit the reservation was made for mining as well as other purposes."

The appellant seeks to distinguish that case from the case at bar by referring to the fact that the proclamation setting aside the Collville reservation, which was under consideration in that case, was made before the enactment of section 2319 of the Revised Statutes. But, if the President had the power to set aside a portion of the public domain for an Indian reservation, it is clear that the power was not abridged by the enactment of that statute. Congress did not thereby dispose of any estate in the public lands, or create any burden thereon, or establish any right therein until the actual inception and assertion of mining rights thereunder. Statutory license to locate mining claims has never been held, prior to the acquisition of a vested right, to be an obstacle to either the disposition or the reservation of the public lands. We entertain no doubt of the correctness of our ruling in the McFadden Case. The power of the President to create a reservation of public lands for the use and benefit of the Indians and for other purposes has been recognized both by Congress and by the courts—by Congress in enacting subsequent appropriation acts, appropriating money therefor, or other acts, as in this particular case by the act of May 27, 1902, and by the joint resolution No. 24 (32 Stat. pt. 1, 245–277), and joint resolutions Nos. 25 and 31 (32 Stat. pt. 1, 742, 744). In Grisar v. McDowell, 6 Wall. 363, 18 L. Ed. 863, the court, referring to the power of the President to reserve from sale and set apart for public uses portions of the public domain, said: "The authority of the President in this respect is recognized in numerous acts of Congress. Thus, in the pre-emption act of May 29, 1830, it is provided that the right of pre-emption contemplated by the act shall not 'extend to any land which is reserved from sale by act of Congress, or by order of the President, or which may have been appropriated for any purpose whatever;'" and the court alluded to other acts in which Congress had recognized reservations made by the proclamation of the President or by the authority of the President or officers acting under his direction. The same was held of an Indian reservation created by executive order in United States v. Leathers, 6 Sawy. 17, Fed. Cas. No. 15,581, United States v. Sturgeon, 6 Sawy. 29, Fed. Cas. No. 16,412, and United States v. Payne

Digitized by Google

(D. C.) 8 Fed. 883. There can be no doubt that such a reservation by proclamation of the executive stands upon the same plane as a reservation made by treaty or by act of Congress. In Bardon v. Northern Pacific Railroad, 145 U. S. 535–543, 12 Sup. Ct. 856, 36 L. Ed. 806, the Supreme Court affirmed the doctrine expressed in Wilcox v. Jackson, 13 Pet. 498, 10 L. Ed. 264, that land once legally appropriated to any purpose was thereby severed from the public domain; and the ruling in Leavenworth & Galveston Railroad v. United States, 92 U. S. 733, 23 L. Ed. 634, in which it was said of the Indians' right of occupancy that the legislation which reserved it for any purpose excluded it from disposal as the public lands are usually disposed of, and in which the court said: "For all practical purposes they owned it; as the actual right of possession, the only thing they deemed of value, was secured to them by treaty until they should elect to surrender it to the United States." The treaty stipulation with the Spokane Indians of March 18, 1887, referred to in the complaint, did not relate to that portion of the reservation occupied by the Lower Band of the Spokane Indians which was reserved by the proclamation of January 18, 1881. The appellant, in his bill, makes no claim to have acquired a right in these lands prior to the time when they were so reserved; on the contrary, he alleges that his mining locations were made on May 27, 1902, the day on which the act of Congress was approved subjecting the mineral lands in the reservation to entry under the laws of the United States in relation to the entry of mineral lands, and after the information had come to him that the act had been so approved. But it appears also from the bill that by joint resolution 24 it was enacted that the aforesaid act should take effect, except as otherwise provided, from and after July 1, 1902, and that by joint resolution 25 the time when it should take effect and be operative was postponed until December 31, 1902. Both of these joint resolutions purport to have been approved on May 27, 1902, and, if so, they had the effect to suspend all rights to locate mineral claims granted by the act approved on that date.

But the appellant contends, and so alleges in his bill, that while it appears from the published statutes of the United States that the joint resolutions were approved by the President on May 27, 1902, they were not in fact approved until after June 1, 1902, and therefore after his locations were made, and he urges that this allegation of the bill presents an issue of fact to be determined by evidence. But the published record of the joint resolutions and their approval is unimpeachable. The appellant cannot go behind the authenticated published statutes of the United States, and show that an act which purports to have been approved on a certain date was in fact approved on a different date. Said Mr. Justice Harlan in Field v. Clark, 143 U. S. 649–672, 12 Sup. Ct. 495, 36 L. Ed. 294: "When a bill thus attested receives his approval, and is deposited in the public archives, its authentication as a bill that has passed Congress should be deemed complete and unimpeachable." See, also, Harwood v. Wentworth, 162 U. S. 547, 16 Sup. Ct. 890, 40 L. Ed. 1069. The appellant cites authorities such as Burgess v. Salmon, 97 U. S. 384, 24 L. Ed. 1104, and Louisville v. Savings Bank, 104 U. S. 469, 26

Digitized by Google

L. Ed. 775, to the effect that, where it need and can be done, the very hour when a bill became a law may be shown; but that is a proposition not involved in the present inquiry. Here the offer of the appellant is not to show the precise time at which on May 27, 1902, the act and the joint resolutions were relatively approved, but to contradict the published record of the statute, and to show that the joint resolutions were not in fact approved on the day on which they purport to have been approved, but on a later date, and to deduce therefrom the conclusion that, the locations having been made on the 27th, and after the receipt of the news of the approval of the act, they must consequently necessarily have been made before the approval of the joint resolutions. There is no averment that the mining locations were made in an interval of time between the approval of the act and the approval of the joint resolutions, if the latter were, as we must assume they were, approved on May 27th. The assertion of the validity of the locations rests wholly on the allegation that the joint resolutions were not approved on that day, but at a later date.

In view of these considerations it is apparent that the circuit court did not err in holding that there was no equity in the bill, and it becomes unnecessary to consider the further contention of the appellant that Congress could not, by joint resolutions 24, 25, and 31, deprive him of vested rights.

The decree will be affirmed.

(131 Fed. 43.)

HABELER et al. v. ROGERS et al.

(Circuit Court of Appeals, Second Circuit. June 2, 1904.)

No. 205.

1. SALES—BREACH OF CONTRACT BY BUYER—SELLER'S REMEDIES.

On breach of a contract of sale by the buyer, the seller is entitled, after everything necessary to vest title in the buyer has been done, to store or retain the goods for the buyer's benefit, and recover the contract price; to sell the goods, after notice to the buyer, for the latter's account, and recover the difference between the contract price and the net proceeds of the sale; or, without doing either, to recover the difference between the contract price and the market value of the goods at the time and place of delivery.

2. SAME—TENDER.

Where a buyer notified the seller of goods that he would not accept the same, the seller was not required to make a formal tender of the goods in order to sustain an action for breach of contract.

3. SAME—ABILITY TO PERFORM—EVIDENCE.

Where, in an action for breach of a contract to purchase 5,000 tons of phosphate rock, to be delivered between February 1 and June 1, 1900, at the buyer's option, at the rate of not more than 2,500 tons in a month, the sellers proved that they were selling agents of an association of phosphate rock miners in Tennessee, and exclusive selling agents of another mining concern in that state, and had a contract with each to deliver in April and May, 1900, as much as 2,500 tons per month of such rock as

---

¶ 2. See Sales, vol. 43, Cent. Dig. § 1087.

Digitized by Google

was called for in the contract, and that each had the requisite quantity of rock on hand to supply the contract, the evidence was sufficient to establish the sellers' ability to perform.

4. SAME—ELECTION OF REMEDIES.

Where, after defendants notified plaintiffs that they would not accept phosphate rock contracted for, plaintiffs gave notice of their intention to store or resell such rock, such notice did not constitute such an election by plaintiffs to treat the contract as still subsisting for the benefit of the defendants as precluded plaintiffs from maintaining an action to recover damages for breach of the contract, on the theory that it was terminated by defendants' notice of their refusal to accept.

In Error to the Circuit Court of the United States for the Southern District of New York.

R. B. Honeyman, for plaintiffs in error.
H. A. Forster, for defendants in error.

Before WALLACE, LACOMBE, and TOWNSEND, Circuit Judges.

WALLACE, Circuit Judge. This is a writ of error by the defendants in the court below to review a judgment for the plaintiffs entered upon a verdict of a jury.

The action was brought to recover damages for the breach by the defendants of a contract with the plaintiffs made August 9, 1899, whereby the defendants agreed to buy 5,000 tons of phosphate rock of the plaintiffs at the price of $4 per ton, "delivery to be completed when loaded on cars at Mt. Pleasant, Tennessee, and sampling to be done at time of loading." By the terms of the contract, the rock was to be shipped to the defendants at any time between February 1 and June 1, 1900, at buyers' option, "but seller to have at least fifteen days' notice before goods are required, and goods to be loaded at the rate of 200 tons for each working day, not more than 2,500 tons in one month." It was proved upon the trial that the plaintiffs were the selling agents of an association of phosphate rock miners in Tennessee, and the exclusive selling agents for another mining concern there, and had a contract with each to deliver as much as 2,500 tons of rock per month in April and May, 1900, such as was called for by the contract with the defendants, and that each had the requisite quantity of rock on hand to supply the contract. It was also proved that on April 19th the defendants wrote the plaintiffs as follows:

"We have delayed answering your letters with reference to the 5,000 tons phosphate rock, hoping that we might be able to give shipping directions. * * * The war in South Africa has caused an absolute dearth of vessels and it is impossible for us to get anything to enable us to carry out the contract. * * * We can only say that we are forced to accept your proposition to hold us liable for your loss, if any, and we hope you will make your loss as little as possible."

April 30th the plaintiffs wrote the defendants, inclosing an invoice for 2,500 tons of rock, and stating:

"Goods not moved according to contract, therefore at your risk, and any and all expenses and losses for your account, storage charges for your account."

Digitized by Google

On May 7th the defendants again notified the plaintiffs as follows:

"Replying to your favor of the 4th inst., we beg to say that we intended by our letter of the 10th ult., to notify you of the fact that we were not going to take the phosphate called for by the contract, and our subsequent letters are quite sufficiently positive upon that point we think. We will of course be glad to meet you with a view of adjusting any losses."

May 11th the plaintiffs wrote to the defendants as follows:

"In view of your positive notice that you will not accept delivery, we notify you herewith of our intention to sell the phosphate on your account for the best price obtainable in open market, and will look to you for any loss which we may sustain."

May 14th, answering this letter, the defendants wrote to plaintiffs:

"We must request you not to sell any phosphate rock on our account."

Evidence was given upon the trial tending to show that the market price for phosphate rock of the contract kind in Tennessee during the months of April and May was as low as $2.50 per ton, that there was little or no sale for it during those months, and that the price declined from about $4 per ton in 1899 to $2.75 in the spring of 1900. The jury found a verdict for the plaintiff for $3,750.

The principal question raised by the assignments of error is whether the trial judge was correct in refusing to direct a verdict for the defendants. The defendants requested such a direction upon the ground that the plaintiffs had not shown that they were ready, able, and willing to deliver the phosphate, and it was obligatory upon them to show that they were ready to make tender.

The law applicable to actions for a breach of contract of sale of goods is so familiar that it almost seems superfluous to repeat the settled rules which obtain. Upon a breach by the vendee the vendor is at liberty to fully perform upon his own part, and, when he has done all that is necessary to effect a delivery of the goods, so as to pass the title to the vendee, he may store or retain them for the vendee, or give the vendee notice and resell them. If he pursues the former course, he is entitled to maintain an action for the contract price of the goods. If he pursues the latter, his recovery will be the difference between that price and the net proceeds of the resale. But it is not obligatory upon him to adopt either of these courses, and, if he does not care to do so, he is entitled to recover the difference between the contract price and the market price or value at the time and place of delivery fixed by the contract. Where a vendee explicitly refuses to perform his part of an executory contract before the time for performance by the vendor has arrived, no tender of performance on the part of the latter is necessary to entitle him to recover damages for the breach.

The defendants having explicitly renounced fulfillment of the contract, proof of the formal requirements to pass title, or to place the phosphate at the risk of the defendants, was not necessary, to entitle the plaintiffs to maintain the action. It would have been an idle ceremony for the plaintiffs to collect together the contract quantity of phosphate in order to make a formal tender of it to the defendants, and neither good faith towards the defendants, nor good sense, nor any technical rule of law, required them to do so. It was necessary for them to

Digitized by Google

show upon the trial that they could have procured it—in other words, that they were in a situation to perform the contract if the defendants had not repudiated it—because otherwise it would not have appeared that they had sustained any substantial damage from the breach. Bigler v. Morgan, 77 N. Y. 312, 319. The evidence introduced was sufficient for that purpose. Stanton v. Small, 3 Sandf. 230. The contention for the defendants that the plaintiffs, by giving notice of their intention to store or resell the phosphate, elected to treat the contract as still subsisting for the benefit of the defendants, and became thereby subject to the performance of all its obligations on their own part, is without any foundation. The authorities cited in its support are those like Frost v. Knight, L. R. 7 Exch. 111, where an action is brought before the time for performance on the part of the defendant has expired, upon the theory of an anticipatory breach on his part, and those like Bernstein v. Meech, 130 N. Y. 354, 29 N. E. 255, which do not proceed upon the theory of an anticipatory breach, but after the breach the promisee has elected to keep the contract alive, and the promisor has acted in reliance upon such election. In such cases the effect of the election to treat the contract as still subsisting is to permit the other party to fulfill it and obtain its benefits, notwithstanding his previous breach. The election is a waiver of the breach. The authorities cited have no application to the present case. There having been no tender of the phosphate, and the title not having passed, the notices which were given by the plaintiffs proceeded upon a mistaken notion of their rights. The notices, however, in no way altered the situation of the defendants, or imposed any new obligations upon themselves. Their only effect was to evoke counter notices from the defendants that they would not consent to the course proposed. Neither party was influenced by them. Even if the plaintiffs had acted upon the notices and resold the phosphate, this would not have been a waiver of their claim for damages for nonperformance of the contract. Sands v. Taylor, 5 Johns. 395, 410, 4 Am. Dec. 374. The trial judge was correct in refusing to direct a verdict for the defendants.

The rulings of which error is assigned upon the question of damages, and in respect to the admission and exclusion of evidence, have been examined, and we do not find that any of them require detailed consideration or afford any substantial ground of complaint.

The judgment is affirmed.

(131 Fed. 46.)

AMERICAN ALKALI CO. v. SALOM.

(Circuit Court of Appeals, Third Circuit. June 29, 1904.)

No. 57.

1. CORPORATIONS—SUBSCRIPTION CONTRACT—FRAUD—INTENT—CURING ERROR.
Where a subscriber to the stock of a corporation defended on the ground that he was induced to subscribe by fraudulent representations, an objection that an offer of evidence was not complete in that it did not propose to show that the statements of fact alleged to be untrue were made with a fraudulent intent, was cured by an instruction that it was necessary for defendant to show not only that the statements complained of were false, but that they were made with a fraudulent intent.

Digitized by Google

2. SAME—STATEMENT OF FACT.

Statements in a stock subscription contract that certain patents owned by persons designated were the basic patents under which the manufactured article was to be produced, and that it was proposed by the corporation to be formed, to acquire such patents and improvements for the United States, and to pay therefor 480,000 shares of the full-paid common stock of the company and $1,000,000 in cash, were statements of fact on which it was intended that subscribers should rely, and were, therefore, the proper subjects of false representations.

3. SAME—RESCISSION—TENDER OF STOCK.

Where, in an action on a stock subscription contract, defendant pleaded a rescission of the contract for false representations and fraud, and in his affidavit of defense tendered a return of his stock, such tender was sufficient, though prior to his discovery of the fraud he had sold certain of his shares, which, however, he could replace at any time by purchase in the open market.

4. SAME—RESCISSION—DEFENSE AT LAW.

A subscriber to the stock of a corporation is entitled to plead a rescission of the sale for fraud as a defense to an action at law to recover assessments on the subscription contract.

5. SAME—FALSE REPRESENTATIONS—RELIANCE.

Where misrepresentations of fact were contained in a corporate stock subscription contract itself, and were held out as material inducements to persons who were solicited to subscribe for stock, a subscriber's signature to the contract, in the absence of evidence to the contrary, was sufficient proof that he relied and acted on the faith of such representations.

6. SAME—LACHES—ESTOPPEL.

Where defendant was induced to subscribe for stock in a corporation on the faith of false representations made by the corporation itself and contained in the subscription contract, the corporation was estopped to claim that defendant was bound to investigate the truth of such statements, and was guilty of laches in failing to make any inquiry to ascertain the truth of such representations until shortly before defendant filed his affidavit of defense in a suit by the corporation to recover assessments levied on the stock.

In Error to the Circuit Court of the United States for the Eastern District of Pennsylvania.

See 125 Fed. 1006.

Reynold D. Brown, for plaintiff in error.

John G. Johnson, for defendant in error.

Before ACHESON and GRAY, Circuit Judges, and KIRKPATRICK, District Judge.

ACHESON, Circuit Judge. This was an action by the American Alkali Company, a corporation organized under the laws of the state of New Jersey, against Pedro G. Salom, to recover an assessment of $2.50 per share upon 1,000 shares of the plaintiff company's capital stock subscribed for by the defendant. The written subscription contract, which is the foundation of the claim in suit, contains the following statements on the part of the plaintiff corporation:

"Whereas, the Commercial Development Corporation of England owns for the United States the patent rights of Mess. Hermite and Dubosc and John G. A. Rodden, together with the further improvements that may be made by these patentees for the electrolytic production of caustic soda and bleaching powder. The patents of Mess. Hermite and Dubosc are the basic patents and

Digitized by Google

that of Mr. John G. A. Rodden, by far the most efficient and economical invention yet made for the production of these important chemical products;

"And whereas, it is proposed to establish in this country at some important water power, either Niagara or Sault Ste. Marie or other advantageous point a large plant for the production of these products and for that purpose to acquire the aforesaid patents with all improvements, etc., for the United States, and to pay therefor 480,000 shares of the full paid common stock of the company and $1,000,000 in cash."

The defense rested upon the ground that these were material statements, and that they were false, and were fraudulently made. There was a verdict for the defendant, and, judgment in his favor having been entered on the verdict, the plaintiff brought this writ of error.

We will follow the groupings and order of the assignments of error presented in the brief of the counsel for the plaintiff in error in our treatment of the case.

1. The assignments of error Nos. 1–4, as to necessity of fraudulent intent.

If the offer of evidence was incomplete in that it did not propose to show that the statements of fact alleged to be untrue were made with fraudulent intent, such omission in the offer was cured subsequently. The trial judge distinctly charged the jury that it was necessary for the defendant to show not only that the statements complained of were false, but also that they were made with fraudulent intent. The instructions of the court upon this branch of the case, we think, were unobjectionable.

Even if we assume that the point was distinctly made in the court below, or is involved in any of the assignments, we cannot agree to the proposition that the defendant was absolutely concluded by reason of his negative response to the single question whether he now had any reason to doubt that Mr. Gibbs believed the statements to be true. That one answer of the witness was to be considered in connection with his entire testimony. It was for the jury to determine the question of fraudulent intent from the whole evidence in the case. That question was fairly submitted to the jury.

2. Assignments of error Nos. 5, 6.

The main question raised by these assignments is whether the statement that the patents of Hermite and Dubosc are the basic patents for the electrolytic production of caustic soda and bleaching powder was the assertion of a fact or a mere expression of opinion. The learned trial judge charged the jury that this statement was the affirmation of a fact, and he distinguished it from the statement that the Rodden patent "is by far the most efficient and economical invention yet made for the production of these important chemical products," which latter representation, he instructed the jury, was an expression of opinion. Having regard to the circumstances, namely, that the proposed enterprise was the production of caustic soda and bleaching powder by the electrolytic method, and that the statement that the patents of Hermite and Dubosc were the basic patents—that is, fundamental patents—in the production of those substances appeared in the subscription paper presented to persons who were solicited to subscribe for stock in the company, we cannot doubt that the statement was intended as an affirmation of a fact, and to be so accepted by subscribers.

Digitized by Google

The statement was not in form the expression of an opinion, but was positively made. It related to a matter of prime importance, and was apparently based on actual knowledge. Undoubtedly, it was intended that persons who were solicited to subscribe for stock should rely upon the statement as true, and act upon it. We think that the court below was quite right in charging the jury that the statement that these patents were "the basic patents" for the purpose named was the affirmation of a fact.

We are not able to give assent to the suggestion that there was no evidence tending to show fraudulent intent in making the statement that the patents were the basic patents. That the letter of Mr. Bennett, the patent lawyer, furnished a justification for that statement, we cannot affirm. The question of fraudulent intent was for the jury under all the evidence.

3. Assignment of error No. 7, as to statement of price proposed to be paid for patents.

This assignment reads thus:

"The learned judge who tried the cause erred in charging the jury as follows: 'I say, therefore, that is a statement not of what had been done, but what was proposed to be done; but that it was none the less, for that reason, a statement of fact.'"

This assignment, we think, is not well founded. The statement that it was proposed to pay for the patents 480,000 shares of the full-paid common stock of the company (equal to $24,000,000 of stock at par value) and $1,000,000 in cash was not a mere promissory statement as to future plans or expectations. The statement, especially when read in connection with the context, imported a present determination—a fixed purpose. The stated price was part and parcel of the enterprise disclosed in the subscription paper. A subscriber had a right to regard the named price to be paid for the patents as a statement of fact. That the statement was intended to be the representation of a fact is plain to us. The plaintiff company, having adopted the subscription contract, is bound by the statements of fact therein contained.

A recital of the evidence upon this branch of the case would be unprofitable, and is not called for by this assignment. We then content ourselves with saying that we think the evidence fully justified the court in submitting to the jury the question whether or not the statement as to the price to be paid for the patents was false, and, if false, whether or not the statement was fraudulently made.

4. Assignment of error No. 8.

This assignment is to the refusal of the court below to affirm the plaintiff's first point, namely, "Under all the evidence your verdict should be for the plaintiff." It is urged in support of this assignment that it appears from the testimony of the defendant upon the trial of the case that before his rescission he had sold some of the shares of common stock he had received in the transaction, but that he could at any time replace these shares by purchase in the open market. No point on this score was made upon the trial below, and we think it is hardly open to the plaintiff in error to raise the question here under the assignment to the refusal of the court to grant his general prayer

Digitized by Google

for binding instructions. But, aside from that view, the position is without merit. The defendant, in his affidavit of defense, tendered a return both of his common and preferred stock, and this was a continuing tender. We think it was a good tender, notwithstanding his sale of the few shares before his discovery of the fraud, for he could replace these shares, and make his tender effective, by purchase in the open market, and under the circumstances that was sufficient.

Under the eighth assignment the plaintiff in error contends further that the defense that the defendant's subscription was procured by fraudulent representation cannot be set up in this action at law. To sustain this position the case of Lantry v. Wallace, 182 U. S. 536, 21 Sup. Ct. 878, 45 L. Ed. 1218, is cited. But that was an action by a receiver of a national bank to enforce the statutory liability of a stockholder to pay an additional 100 per centum for the benefit of creditors, and the ruling was that, if the defendant was entitled, by reason of the fraud practiced upon him by the bank, to a rescission of his contract of purchase of stock and to a cancellation of his stock certificate, and consequently to be relieved from his statutory responsibility as a shareholder of the bank, he could obtain such relief only by a suit in equity to which the bank and the receiver were parties. In the present case, however, the action is by the corporation itself, and is brought to enforce the subscription contract. We think it very clear that in an action at law to enforce a contractual demand such as is involved here, fraud is an available defense. Russell v. Clark, 7 Cranch, 69, 3 L. Ed. 271; Insurance Company v. Bailey, 13 Wall. 616, 20 L. Ed. 501. In the case last cited equitable jurisdiction was denied upon the ground that the fraud alleged was available as a defense at law in a suit upon a policy of insurance.

5. Assignment of error No. 9, as to proof that defendant relied upon the alleged misrepresentations.

It is enough to say that the misrepresentations complained of were not statements made merely by an agent, but were contained in the subscription contract itself. Manifestly, they were material inducements held out to persons who were solicited to subscribe for stock. They were the very ground upon which subscriptions were to be made. The signature of the defendant (in the absence of evidence to the contrary) was positive proof that he relied on these representations and acted on the faith of them.

6. Assignment of error No. 10.

The plaintiff, in his fourth point, requested the court to charge that:

"If defendant was induced in May, 1899, to become a holder of the preferred stock of the plaintiff company by the misrepresentations alleged in the affidavit of defense, or any of them, then it was the duty of the defendant to use reasonable diligence to ascertain the truth of such representations. If he did not do so within a reasonable time, and did not ascertain the truth of said matter until more than two years later, then he cannot maintain any defense by means of such misrepresentations."

In response to this request the court instructed the jury that the obligation upon the defendant "was with reasonable promptness, upon being informed or in any manner learning that either of the alleged misstatements contained in this paper existed to repudiate—or, as

Digitized by Google

lawyers say, rescind—the contract"; but as to there being an obligation upon the defendant to make inquiry to find out whether the paper was true or false within any period of time, and before the question was in any manner brought to his attention, the court answered the point negatively. Under the facts of the case, these instructions, we think, were entirely right. The defendant signed the subscription contract in May, 1899. The assessment sued for was made in September, 1901. The call therefor was by the corporation itself, then a solvent and going concern, and was for the purpose, as expressed in the resolution; of "providing funds for the completion of the present works, the building of additional works, and providing working capital." This action was brought and has been prosecuted by the corporation itself. The date of the institution of this suit was December 17, 1901. The affidavit of defense, which sets up the misrepresentations complained of, was filed January 3, 1902. Information as to the falsity of the representations was not received by the defendant until very shortly before he made his affidavit of defense. We see nothing in this case which made it the duty of the defendant to make earlier inquiry to ascertain the truth of the representations contained in the subscription contract and upon the faith of which the defendant entered into the contract. In the absence of knowledge or any information as to the untruthfulness of the representations, the defendant had a right to rest upon them. Certainly it does not lie in the mouth of the plaintiff to charge the defendant with lack of diligence in discovering the fraud of which he complains. We think it may be affirmed confidently that as against the corporation itself a subscriber for stock is not bound to investigate the truth of statements upon the strength of which he subscribed. The Directors, etc., of the Central Railway of Venezuela v. Kisch, Law Rep. 2 H. L. 99; Upton v. Englehart, 3 Dill. 496, Fed. Cas. No. 16,800; Mead v. Bunn, 32 N. Y. 275.

The appointment of a receiver for the company since suit brought cannot affect the rights of the parties which had become fixed.

We are of opinion that this record is free from error, and accordingly the judgment is affirmed.

(131 Fed. 51.)

E. W. BLISS CO. v. BUFFALO TIN CAN CO.

(Circuit Court of Appeals, Second Circuit. June 1, 1904.)

No. 190.

1. MANUFACTURE AND SALE OF MACHINERY—CONTRACTS—BREACH—MEASURE OF DAMAGES.

In an action for breach of a contract for the manufacture and sale of machinery, the buyer's measure of damages was the difference between the contract price and the market value of the machinery at the time and place where it was to be delivered, or, if there was no market value, then the difference between the contract price and what it would have cost the buyer to have the machinery manufactured; and this though plaintiff did not attempt to have equivalent machinery made.

¶ 1. Contracts for sale of things to be produced or manufactured, see note to Star Brewery Co. v. Horst, 58 C. C. A. 363.

Digitized by Google

2. SAME—LOST PROFITS.

Where, at the time a contract for the manufacture and sale of machinery was made, no notice was given to the seller that the machinery was to be used by a corporation to supply tin cans under an existing contract, the seller, on a breach of the contract, was not liable for alleged lost profits, based on the opinion and estimates of experts respecting the producing capacity of the contract machinery, and the probable output of the factory in which it was to be used, if the factory had been supplied with such machinery, properly installed, and operated to its capacity, etc.; such profits being speculative and uncertain.

3. SAME—DEFENSES.

Where defendant contracted to manufacture and sell to plaintiff certain machinery, defendant was not entitled to refuse performance on the ground that the machinery contracted for would infringe outstanding patents.

In Error to the Circuit Court of the United States for the Western District of New York.

See 118 Fed. 106.

P. G. Bartlett, for plaintiff in error.

Chas. J. Bissell, for defendant in error.

Before WALLACE, LACOMBE, and TOWNSEND, Circuit Judges.

WALLACE, Circuit Judge. This is a writ of error by the defendant in the court below to review a judgment for the plaintiff entered upon the verdict of a jury. The action was brought to recover damages for the breach of a written contract between the defendant and the Erie Preserving Company, dated April 3, 1901, whereby the defendant undertook to build and deliver to that company certain described machinery for making tin cans, and the Erie Preserving Company agreed to pay therefor the sum of $21,678. The contract provided that the machinery should be completed and ready for delivery to the Erie Preserving Company within 18 months from the date of the contract; that the quality of the machinery should be first-class, as to workmanship and material; that it should be inspected and accepted at the shop of the defendant; and that, upon a demonstration of the successful working of the machines, tested singly by the defendant, the defendant should be considered as having carried out its part of the contract.

The complaint alleged, and it was proved upon the trial, that on May 10, 1901, the defendant rescinded the contract, and, by a written notice, refused to deliver the machinery to the Erie Preserving Company. On July 10, 1901, the Erie Preserving Company assigned the contract and its right of action for damages to the plaintiff, a corporation organized shortly after the date of the contract.

Of the numerous assignments of error, those only need be considered which challenge the rulings of the trial judge in admitting evidence, and his instructions to the jury upon the question of damages. In consequence of these rulings and instructions, the jury were led to award a recovery to the plaintiff of $75,000.

The plaintiff was permitted to give evidence tending to show that, after the defendant had refused to deliver the machinery, the plaintiff diligently endeavored to purchase similar machinery from other sources,

Digitized by Google

but was unable to do so, and that as soon as practicable it installed in its factory the best machinery for making tin cans which it was able to purchase in the market (the MacDonald machinery), and had used this machinery for its manufacturing purposes ever since. The plaintiff was also permitted to give evidence tending to show how many cans it could have made in its factory, and with its facilities, and at what cost per thousand, if it had been supplied with the contract machinery, and the market prices for such cans in the years 1901 and 1902. The plaintiff was also permitted to give evidence tending to show that, about the time the Erie Preserving Company assigned to it the contract with the defendant, it made a contract with that company to sell to it during the year 1901 12,300,000 cans at specified prices; that in 1902 it also made a contract with that company to sell to it during that year 14,000,000 cans at the ruling market prices; that during the year 1901 that company actually used over 8,000,000 cans, and during the year 1902 over 9,000,000 cans, such as the plaintiff had contracted to sell to it; that with the contract machinery the plaintiff could have produced the whole number of cans called for by its contracts with the Erie Preserving Company; and that, using the MacDonald machinery, it had only been able to make about 9,000,000 cans in 1901 and 1902. The defendant duly objected to the admission of this evidence, and excepted to the rulings of the trial judge in receiving it.

The trial judge instructed the jury that they were to take the foregoing evidence into consideration in ascertaining what damages had accrued to the plaintiff for the breach of the defendant's contract during the years 1901 and 1902. He also instructed the jury as follows:

"Whether damages should be awarded to the plaintiff because of future losses—losses for the year 1903 and future years—that is entirely in your discretion. Such discretion, however, must, of necessity, be based upon the evidence and the circumstances in the case. If such damages should be very problematical, and hinge upon extreme uncertainty, you should not award any damages * * * The question submitted to you upon this subject is whether the damages sought to be recovered for losses of gains or profits in the future are such as can with reasonable certainty be ascertained. Before awarding prospective damages, as distinguished from actual damages, you should take into consideration that corporations may default in their commercial undertakings; that machinery of the kind in controversy, or the equivalent of such machinery, may in future years be improved; that combinations now alleged to control the market may not continue; that the ingredients of manufacture may have a different value; and doubtless many other speculative considerations would enter into an award for future losses. Should you, however, with reasonable certainty, be able to say, because of the circumstances of this case, that the plaintiff will sustain damages in future years, including the year 1903, you may render an award for such prospective damages."

The defendant duly excepted to these instructions.

That the assignments of error based upon the exceptions to these rulings and instructions are well founded is hardly a debatable proposition. The evidence which was submitted to the consideration of the jury was mainly, and of necessity, based upon opinions and estimates respecting the producing capacity of the contract machinery, and respecting the probable output of the plaintiff's factory during the period beginning at the inception of its business, if the factory had been supplied with the machinery, if the machinery had been properly installed, if it

Digitized by Google

had proved equal to its expected capacity, and if it had been efficiently operated. The normal producing capacity of machinery which has been adequately tested is susceptible of proof, and such proof can be safely accepted as the standard for similar machinery; but the probable producing capacity of a manufacturing concern which is about to enter upon a new business depends upon so many considerations, irrespective of the machinery which it is to employ, that opinions and estimates about it are little more than guesses. But the objection to the evidence is not that it is unreliable. It does not go to the weight or value of the testimony. The objection is that the evidence bears upon an inquiry which the courts ought not to entertain.

In actions for breach of contract, like the present, the measure of damages is usually the difference between the contract price of the things which are to be made and delivered, and their market value at the time and place where they should have been delivered. In exceptional cases this rule of damages is extended to include other losses occasioned by the breach; but never, according to the best-considered authorities, is it extended to include the loss of general profits which the injured party might have been able to realize from using them in his business for manufacturing purposes, and disposing of the products. The cardinal rule is familiar that only such damages are recoverable as follow directly and naturally from the breach of contract—such as it may be fairly supposed the parties contemplated when contracting as the natural sequence of its breach—and these must be certain, as distinguished from speculative or contingent, damages. The application of this rule to the present case is best illustrated by reference to a few of the adjudications. Howard v. Stillwell, etc., 139 U. S. 199, 11 Sup. Ct. 500, 35 L. Ed. 147, was a case where the contract broken was one for the reconstruction of a mill by placing certain specified machinery therein within a specified time, guarantied to have a specified capacity; and the mill owner sought to prove, as damages for the breach, the profits which would have been realized from the use of the mill during the period of delay in performing the contract. The court held that the evidence of such damages was inadmissible. Pennypacker v. Jones, 106 Pa. 237, was a case where a mill owner had made a contract with machinists to place in his mill within a specified time machinery of a certain capacity to make high-grade flour. The machines furnished were incapable of making high-grade flour, and of producing the stipulated number of barrels per day. In an action for damages by the mill owner for breach of the contract, the court held that the loss of possible profits which might have been made if the mill had run properly was not a proper subject of damages, and for the reason that such damages were too remote and speculative. In Griffin v. Colver, 16 N. Y. 489, 69 Am. Dec. 718, the plaintiff agreed to build a steam engine and boilers for the defendants, and to deliver it to them on a day certain. He failed to do so, and a delay of one week occurred, during which the defendants lost the use of the machinery for the sawing and planing of lumber which the steam engine was intended to drive, and which plaintiff knew it was intended to drive. The court held that the defendants, in recouping damages, were not entitled to measure their loss by a breach of the contract by estimating what they might have

Digitized by Google

made by the use of the engine and their other machinery, had the contract been complied with, and decided that they were entitled to recover the ordinary rent or hire which could have been obtained for the use of the machinery whose operation was suspended for want of the engine. In Rochester Lantern Company v. The Stiles & Parker Press Co., 135 N. Y. 209, 31 N. E. 1018, the defendant entered into a contract with one Kelly to make and deliver to him within a reasonable time certain dies to be used by him in the manufacture of lanterns. Before the breach, Kelly assigned his contract to the plaintiff; and the plaintiff sought, as damages for the breach, to recover rent of premises, and wages of employés, paid during the time in which, in consequence of not being supplied with the dies, he was unable to manufacture any lanterns. The court held such damages were not recoverable, and said:

"The natural and obvious consequence of a breach of this contract on the part of the defendant would be to compel Kelly or his assignee to procure the dies from some other manufacturer, and the increased cost of the dies, if any, would be the natural and ordinary measure of damages; and such would be the damages which it could be fairly supposed the parties expected, when they made the contract, would flow from a breach thereof."

Although it is unnecessary for present purposes to consider any of the other assignments of error, it is proper that we should make some further observations for the guidance of any future trial of the cause. The voluminous record before us presents the proceedings of a very protracted trial, and exhibits an accumulation of evidence upon matters which had no legitimate bearing upon the real controversy between the parties. The making of the contract was not disputed. The breach was not disputed. The alleged justification for the breach put forth by the defendant—that it had discovered that the machinery would infringe outstanding patents—hardly merited serious consideration, and was properly excluded by the trial judge. The evidence offered by the plaintiff bearing upon the defendant's motive or inducement for the breach was wholly immaterial. The real controversy between the parties resolved itself merely and simply into an inquiry as to damages. This inquiry should have been limited to ascertaining the difference between the contract price of the machinery which the defendant undertook to furnish, and the cost to the plaintiff of procuring similar machinery from some other source. If, as was suggested by the evidence, the machinery could not have been bought from other vendors, it was open to the plaintiff to have it made, and in this behalf to employ draftsmen and mechanics competent to make it; and, notwithstanding plaintiff did not attempt to have equivalent machinery made, if it had shown upon the trial that the reasonable expense of procuring such machinery would have exceeded the contract price, the plaintiff would have been entitled to recover the excess. When an article has no market value, an investigation into the constituent elements of the cost to the party who is entitled to be furnished with it becomes necessary; and that, compared with the contract price, will afford the measure of damages. Masterton v. The Mayor, 7 Hill, 61, 71, 42 Am. Dec. 38. The evidence did not suggest that the defendant was aware when the contract was made that the Erie Preserving Company proposed to use the machinery in any particular factory, or

Digitized by Google

install it as a part of any particular plant. That company was at the time engaged in the business of preserving fruits and vegetables, and, instead of buying its cans in the market, as it had done previously, proposed to manufacture them itself. According to the testimony for the plaintiff, the defendant was aware that the plaintiff intended to go into the business of making its own cans, and that it proposed to organize a subordinate or auxiliary corporation to carry on the canmaking business. At that time, however, the plans of the Erie Preserving Company were inchoate. It had not rented any factory building or purchased any auxiliary plant. Indeed, it would seem that this was not done until after the defendant had repudiated its contract and notified the Erie Preserving Company. Under these circumstances, it cannot be said with any color of reason that the parties to the contract contemplated when it was made any liability of the defendant, in the event of a breach, beyond the usual consequences of the failure of a vendor to deliver property which he had agreed to sell. In the language of the court in Globe Refining Co. v. Landa Cotton Oil Co., 190 U. S. 545, 23 Sup. Ct. 754, 47 L. Ed. 1171:

> "It may be said with safety that mere notice to a seller of some interest or probable action of the buyer is not enough, necessarily and as a matter of law, to charge the seller with special damage on that account if he fails to deliver the goods."

As was said by the Supreme Court of Massachusetts in Harvey v. Conn., etc., R. R. Co., 124 Mass. 424, 26 Am. Rep. 673:

> "The mere knowledge on the part of the defendant that the plaintiff intended to make contracts for the sale of the ties to be transported cannot impose a liability upon the defendant for the loss of profits of such contracts. Whether there would be a loss of profits, it was, of course, then impossible to tell, and probable profits would be incapable of estimation."

If at the time of the making of the contract with the defendant the Erie Preserving Company had acquired and installed a manufacturing plant, and the contract had contemplated the use of the machinery as an indispensable part of the plant, the case would have been one, according to some of the authorities which have been referred to, in which the rental value of the plant during the time required to supply equivalent machinery would have been an element of damages, in addition to the difference in cost

The judgment is reversed.

LACOMBE, Circuit Judge. I concur fully in this opinion. The proposition advanced in argument, that plaintiff would have been enjoined by the owner of outstanding patents from using equivalent machinery, even if he had had it built, is of no weight. That circumstance would not modify the rule of damages laid down in the opinion for breach of a contract to make and deliver machinery. The contract sued upon is not one to save plaintiff harmless from all suits for infringement of patents.

Digitized by Google

(131 Fed. 57.)

BLUE MOUNTAIN IRON & STEEL CO. v. PORTNER et al.

(Circuit Court of Appeals, Fourth Circuit. July 12, 1904.)

No. 544.

1. BANKRUPTCY—ADJUDICATION—SUBMISSION OF QUESTIONS.
On the hearing of an involuntary bankruptcy petition, where the appointment of a receiver by the state court was claimed to constitute the act of bankruptcy charged, questions submitted to the jury as to whether on the date the receivers were appointed, and at the date of filing the bankruptcy petition, the aggregate of the property of the alleged bankrupt, at a fair valuation, was sufficient to pay its debts; whether, because of the insolvency of the alleged bankrupt, receivers were put in charge of its property under the state laws; and whether such receivers took charge and possession of the property, and have since so remained—were proper.

2. SAME—RECEIVERS—STATE COURTS—JURISDICTION—COLLUSION.
Where it was claimed that a state court had no jurisdiction to appoint receivers for an alleged bankrupt corporation, for the reason that, prior to the filing of the bill under which the appointment was made, another bill was filed in another court for the same purpose, but it appeared that the prior proceeding was collusive, and that nothing was done or intended to be done therein except to file the bill, such proceeding was ineffective to prevent the appointment of receivers in the subsequent suit constituting an act of bankruptcy.

3. SAME—STATE COURTS—GENERAL JURISDICTION—JUDGMENT—COLLATERAL ATTACK.
The appointment of receivers for a corporation by a state court of general jurisdiction was not subject to collateral attack on the ground that the court did not have jurisdiction of the corporation's person.

4. SAME—JUDICIAL PROCEEDINGS—BEST EVIDENCE—RECORDS.
Where an order of court appointing receivers for a corporation was in writing, parol evidence of the judge who made the order was inadmissible to show the grounds thereof.

5. SAME—ADMISSIBILITY.
On an issue as to whether defendant had committed an act of bankruptcy by reason of the appointment of receivers to administer its assets in a state court, the record was admissible to show the appointment of such receivers, and that they were appointed because of defendants' insolvency.

6. SAME—TEMPORARY RECEIVERS.
Under Bankr. Act 1898, as amended by Act Feb. 5, 1903, c. 487, 32 Stat. 797 [U. S. Comp. St. Supp. 1903, p. 410], declaring that the appointment of a receiver for an alleged bankrupt, while insolvent, shall constitute an act of bankruptcy, it was immaterial that receivers appointed for an alleged bankrupt corporation were temporary, and not permanent.

In Error to the District Court of the United States for the District of Maryland.

In Bankruptcy.

Henry C. Terry (Abraham Sharp and Hammond Urner, on the brief), for plaintiff in error.

Bernard Carter and C. Andrade, Jr. (Jacob Rohrback, L. B. Keene Clagett, and J. Kemp Bartlett, on the brief), for defendants in error.

¶ 3. See Corporations, vol. 12, Cent. Dig. § 2241.

Digitized by Google

Before GOFF, Circuit Judge, and BRAWLEY and PURNELL, District Judges.

PURNELL, District Judge. Upon petition filed by defendant in error, after answer filed thereto, and a jury trial of the issues raised, the plaintiff in error, a corporation, was by the court adjudicated a bankrupt on the 17th day of December, 1903. This writ of error was thereupon granted to the plaintiff in error, and presents for revision the correctness of certain rulings on questions of law made by the judge of the District Court during the trial.

The said petition was filed in the District Court August 3, 1903, averments of which are, in substance: (1) That there is owing to the petitioners by the bankrupt, plaintiff in error here, in the aggregate, more than $1,000; specifying the amount owing to each of petitioners. (2) That the Blue Mountain Iron & Steel Company was on or about May 13th or 12th insolvent, and, because of its insolvency, in a proceeding theretofore instituted against it in the circuit court of Frederick county, Md., by certain named creditors thereof, receivers were appointed by an order of said state circuit court passed on the 15th day of May, 1903, and said receivers put in charge of the property of said company. (3) That the said company belongs to one of the classes named in section 4, subsec. "b" of the bankrupt act, as amended (Act Feb. 5, 1903, c. 487, 32 Stat. 797 [U. S. Comp. St. Supp. 1903, p. 410]), wherein it is provided that any corporation engaged principally in mining or mercantile pursuits, owing debts to the amount of $1,000 or over, may be adjudged an involuntary bankrupt, and shall be subject to the provisions and entitled to the benefits of the bankrupt act; (4) that the Blue Mountain Iron & Steel Company was then and had been engaged principally in mining at its furnaces at Catocton, Frederick county, Md., and the court has full power to adjudge the said company bankrupt.

After service of process the Blue Mountain Iron & Steel Company answered, denying it had committed the act of bankruptcy alleged, and that it was insolvent; setting up that the receivers were unlawfully appointed without notice.

A replication to the answer was filed, and, the defendant (plaintiff in error here) having demanded a jury trial, a jury was impaneled, and, after hearing the evidence, the court submitted to the jury three issues of fact, and gave in connection therewith certain instructions. The jury by their verdict answered the questions submitted, and the court signed an adjudication of bankruptcy.

After testimony had been offered both in behalf of petitioning creditors and defendants, the following are the questions which were submitted to the jury, and the responses thereto in the verdict:

(1) Whether on the 12th day of May the date of the appointment of Leonard R. Waesch and others as receivers of the Blue Mountain Iron & Steel Company of Baltimore City, by the circuit court of Frederick county, Maryland, sitting in equity in the case of the Maryland Casualty Company et al. v. the said Blue Mountain Iron & Steel Company of Baltimore City, the aggregate of the property of the said Blue Mountain Iron & Steel Company of Baltimore City was, at a fair valuation, sufficient in amount to pay its debts? A. No; it was not.

Digitized by Google

(2) Whether on the 3d day of August, 1903, the date of the filing of the petition in bankruptcy in these proceedings, the aggregate of the property of said Blue Mountain Iron & Steel Company of Baltimore City was, at a fair valuation, sufficient in amount to pay its debts? A. No; it was not.

(3) Whether, because of insolvency of the Blue Mountain Iron & Steel Company of Baltimore City, Leonard R. Waesch and others, as receivers, on the 12th day of May, 1903, were put in charge of the property of the Blue Mountain Iron & Steel Company of Baltimore City, under the laws of the state of Maryland, and whether said receivers forthwith took charge and possession of said property under said order, and have so remained in charge of said property ever since so taking charge and possession of the same? A. Yes; they were and have so remained.

Thereupon the order adjudicating defendant a bankrupt was entered. The questions submitted to the jury were proper, under the provisions of Bankr. Act, § 19a (Act July 1, 1898, c. 541, 30 Stat. 551 [U. S. Comp. St. 1901, p. 3429]), and the adjudication followed as a consequence, unless there was error in the trial of the issues, in the instructions, or in the rulings of the court, to which the exceptions point.

In the first assignment of error the plaintiff in error asserts that the circuit court of Frederick county had no jurisdiction to appoint the receivers for the Blue Mountain Steel & Iron Company, because, (1) a few days before the bill was filed under which the appointment was made, another bill was filed by Ernest Sharp in the circuit court of the city of Baltimore; (2) because the principal office of the defendant corporation, as set out in the articles of incorporation, was to be in the city of Baltimore. Answer to this alleges, for reasons stated, that the bill by Ernest Sharp was collusive, and nothing more was done in the suit than the filing of the bill, nor was anything more intended to be done. We do not, for obvious reasons, discuss this question, though the facts stated in the answer, which seem to be well founded, would be a complete answer, and prevent this first suit having any effect on the decision of this court.

The second proposition is an attack on the jurisdiction of a state court of general jurisdiction (Const. Md. art. 4, § 20), and that its action cannot be thus collaterally attacked is well settled. In Grignon v. Astor, 2 How. 319, 11 L. Ed. 283, it was held that it was for the state court to decide upon the existence of facts which gave jurisdiction, and the exercise of the jurisdiction warrants the presumption that the facts which were necessary to be proved were proved. In courts of general jurisdiction, it is presumed that the jurisdiction existed. This case has been cited with approval by the Supreme Court in a great number of cases, notably, Applegate v. Lexington Min. Co., 117 U. S. 269, 6 Sup. Ct. 742, 29 L. Ed. 892; Simmons v. Saul, 138 U. S. 439, 11 Sup. Ct. 369, 34 L. Ed. 1054; Evers v. Watson, 156 U. S. 527, 532, 15 Sup. Ct. 430, 39 L. Ed. 520. In this last case the court, in the course of its opinion by Mr. Justice Brown, says:

"Even upon the theory of the plaintiff, to authorize the court to hold the decree in that case void in a collateral proceeding, it was necessary to show beyond any controversy that, upon the record, the court could not have had jurisdiction. This the pleader has failed to do."

Under all the authorities, the presumption is that all the facts necessary to give the state court jurisdiction were presented to that court; and, in the absence of proof beyond controversy to the contrary, which

Digitized by Google

the plaintiff in error in this case failed to set up, every presumption is in favor of the jurisdiction of the state court.

Pending the trial, defendants below tendered one of the judges of the circuit court of Frederick county, Md., as a witness, who testified that he entered the decree of May 12, 1903, appointing the receivers in the case of The Maryland Casualty Company et al. v. Blue Mountain Iron & Steel Company, and proposed to ask him: (1) "Will you state on what grounds you entered said decree?" and (2) "Did you enter said decree on the ground of insolvency?" To which questions petitioning creditors objected, and the court sustained the objection, to which ruling the defendants below excepted, and their bills of exception were allowed in due form.

No authority is cited to sustain these bills of exception, and it is doubted if any can be cited. It does not require argument to sustain the position that the order appointing the receivers, being in writing, must speak for itself, and no declaration of the judge who signed it can be given as grounds on which he entered the order. Public records can neither be explained nor varied by parol testimony. They are conclusive, speak for themselves, and imply absolute verity. Shankland v. Washington, 5 Pet. 390, 8 L. Ed. 166.

It is a fundamental rule that parol contemporaneous evidence is inadmissible to contradict or vary the terms of a valid written instrument, unless in cases where contracts are vitiated by fraud or mutual mistake, but this rule is too well understood and recognized to admit of doubt. Northern Assurance Co. v. Grand View Building Ass'n, 183 U. S. 308, 22 Sup. Ct. 133, 46 L. Ed. 213.

Another exception found in the record as having been signed and sealed by the District Judge is in the following bill of exceptions. After stating that, to maintain the issues on their part, the plaintiffs proved by competent witnesses that, after filing in this court the petition praying that the Blue Mountain Iron & Steel Company of Baltimore be adjudged bankrupt, there was due and owing by said defendant to each of said creditors, respectively, the amounts of money alleged to be due, and that no part of said moneys had been paid; and testimony by competent witnesses legally sufficient to prove that on the 12th of May and 3d of August, 1903, the aggregate of the property of the Blue Mountain Iron & Steel Company was not, at a fair valuation, sufficient in amount to pay its debts, to which no exception was taken, it proceeds:

"And the plaintiffs, further to maintain the issues on their part, then offered in evidence the record of the proceedings in the case No. 7,627, in equity, in the circuit court for Frederick county, Maryland, wherein the Maryland Casualty Company and others are complainants, and the Blue Mountain Iron & Steel Company of Baltimore City et al. are defendants, to the admission of which record the defendant objected, but the court overruled said objection, and admitted the record in evidence, to which action of the court the defendant excepted."

The allegations in the petition in bankruptcy are that the Blue Mountain Iron & Steel Company committed an act of bankruptcy on May 13, 1903, while insolvent, and "because of its insolvency," in a proceeding theretofore instituted in the circuit court of Frederick county by the American Casualty Company and other creditors of the Blue Mountain

Digitized by Google

Iron & Steel Company, receivers were appointed by an order of said court, and that this was an act of bankruptcy, under Act Cong. Feb. 5, 1903, c. 487, 32 Stat. 797 [U. S. Comp. St. Supp. 1903, p. 409], amending the act of Congress of July, 1898.

The defendant corporation denied by its answer that it is insolvent, and alleges the receivers were unlawfully appointed, without notice to respondents, and required proof of the facts alleged in the petition. This made the issue for the trial of which a trial by jury was demanded. The answers of some of the parties—notably, that of Ernest Sharp, who intervened—admitted the insolvency. At all events, the issue was made and submitted in the bankrupt court, and the best evidence of the appointment of the receivers was the record of the proceedings in equity in the court which made the appointment. It was the basis of the issue, and could have been proved in no other way. The record was competent for this purpose, and no authority is cited holding that the best evidence of a proceeding in a court of equity is not the record of the proceeding. Petitioners had proved, as stated in the exceptions, that the company was insolvent, according to the definition of insolvency in the bankrupt act, both on the 12th of May, the date receivers were appointed, and on the 3d of August, the day on which the petition in bankruptcy was filed. Then the question arose, was it on this account the receivers were appointed? The record of the proceedings in court was the best evidence, and there was no error in admitting it. As to the effect of this evidence, that was a question for the jury under the instructions of the court, and the only question presented by this exception is the competency of the evidence. There was no error in admitting this record.

The language of the amendatory act of February, 1903, and the act of bankruptcy alleged in the petition, is "because of insolvency a receiver or trustee has been put in charge of his property under the laws of a state, or a territory, or of the United States." The essential element in the alleged act of bankruptcy is insolvency. As stated, the petitioning creditors have alleged, and the jury found by the verdict, the defendant corporation was insolvent on the day the receivers were appointed, and on the day the petition in bankruptcy filed. The jury found as a fact that it was "because of insolvency" the receivers were put in charge of the company's property. The record was competent as a link in the evidence on this issue. But it is insisted on the argument and in the brief that the receivers were temporary and not permanent. To hold with this position that the bankrupt act requires permanent receivers to be appointed would be to read into the statute something the lawmaking department, Congress, did not see proper to put there. The language of the statute is has been "put in charge of his [its] property." In the case at bar the receivers were in charge of the property from May to August without anything being done on behalf of the corporation, except to lodge a motion. This did not vacate the order or affect it in any way. It is presumed the courts of equity in Maryland, like most others, are always open, and, at least to have any effect, it should be shown some effort was made to have this motion heard. The facts stated appear in the record, and the appointment of the receivers was in the discretion of the court, which cannot be re-

Digitized by Google

viewed in this court, if it could have been so reviewed by the state Court of Appeals. The property was in the hands of receivers, and the jury found it was because of insolvency shown to exist at the time said receivers were appointed. The discussion of the distinction between permanent and temporary receivers is therefore, in our opinion, unnecessary.

The other exceptions and assignments of error are to the refusal of the court to give special prayers for instructions to the jury, and are without merit.

Upon a thorough and careful examination of the record, we find no error, and the judgment of the District Court adjudicating the Blue Mountain Iron & Steel Company bankrupt is affirmed.

(131 Fed. 62.)

BRITAIN S. S. CO. v. J. B. KING TRANSP. CO.

(Circuit Court of Appeals, Second Circuit. April 6, 1904.)

No. 155.

1. COLLISION—STEAMSHIP AT REST—PASSING TUG WITH TOW.

A steamship which, while not anchored, was about to anchor, and had stopped her engines, and was moving very little with the tide, if at all, had the rights of a vessel at rest with respect to passing vessels; and a tug with a tow on a long line, which saw and knew the situation of the ship, was solely in fault for a collision between her and the tow, due to the failure to allow sufficient room in passing.

Appeal from the District Court of the United States for the Southern District of New York.

This cause comes here upon appeal from a decree of the District Court, Southern District of New York, holding the tug Gypsum King solely in fault for a collision between barge No. 19, in tow of the Gypsum King, on a hawser, and the S. S. Woodford. The collision occurred on the anchorage off Clifton, Staten Island, from which the tug was taking the barge, and where the steamer was anchoring. At the time of the collision, a fog which had theretofore prevailed had begun to lighten up, and both vessels took advantage of the change; the tug starting on her voyage to Newport News, and the steamer shifting her anchorage some 600 or 800 feet.

The following is the opinion of the District Court, by HOLT, District Judge: "I think, on the evidence, that, although there was heavy fog at times on the day of the collision, during the period immediately preceding the collision there was only a light fog, and vessels and objects could be seen a quarter of a mile away. The Woodford was not at anchor. She was, therefore, under the preliminary inland rules, technically under way. If the ordinary rules of navigation apply, I think that the Gypsum King with her tow was an overtaking vessel under rule 24, and was in fault for not keeping out of the way of the Woodford. The evidence, however, is clear that the Woodford was almost, if not quite, at a standstill, preparing to anchor, and the men on the Gypsum King testify, in substance, that they thought at first that the Woodford was at anchor, and then that they saw that, although not anchored, she was about to anchor. I think that, in fact, she was probably still forging ahead very slightly, and drifting up a little with the flood tide, but her propeller was reversed, and she was doing all she could to entirely stop or make sternway, and she may have been entirely stopped. Under these circumstances, if she is to be regarded as a vessel substantially not under way, I think the Gypsum King was in fault for running into her. There is a presumption of fault when a vessel under way and under control runs into a vessel not

Digitized by Google

under way. The Gypsum King should have borne off longer to starboard, until her tow had passed the Woodford, and should have originally given the Woodford a wider berth. She was taking a course too near the Woodford for a tug having a tow on so long a hawser. I think the Woodford was not in fault for not blowing fog signals. She was not bound to blow fog signals because the Gypsum King did. The real test is whether it was foggy enough to require them. I think it was not. In any event, the only object of fog signals is to let other ships know that the one blowing them is there. The Gypsum King saw the Woodford 1,000 feet away, and that was an ample distance to permit the Gypsum King and her tow to pass the Woodford in safety. In my opinion, therefore, the omission of fog signals on the Woodford had nothing to do with the collision. My conclusion is that there should be a decree for the libelant, with a reference to ascertain the damage."

Chas. C. Burlingham, for appellant.

J. Parker Kirlin, for appellee.

Before WALLACE, LACOMBE, and TOWNSEND, Circuit Judges.

PER CURIAM. The controlling question in the case is whether or not the steamer was substantially in motion. The district judge found that, although probably still forging ahead very slightly, and drifting up a little with the flood tide, she was almost, if not quite, at a standstill, preparing to anchor, and not under way. He heard some of the important witnesses, and there is no evidence presented sufficient to warrant a reversal of that finding. The witnesses for the steamer testify that she was not in motion. The respondent's witnesses testified that when they first saw her she was apparently at anchor, and, although subsequently they state she was in motion, they yet admit that they did not see her moving through the water, and apparently infer merely that she must have been in motion because collision ensued. The steamer was practically a vessel not under way, was seen to be such by the navigators of the tug, and was so seen at a distance amply sufficient to enable the latter to avoid collision, had they not undertaken to shave too close.

The decree is affirmed, with interest and costs.

(131 Fed. 63.)

BROWN v. HARKINS, Collector.

(Circuit Court of Appeals, Fourth Circuit. July 12, 1904.)

No. 505.

1. DOCUMENTS—SECONDARY EVIDENCE—PROOF OF LOSS.

Rev. St. § 3303 [U. S. Comp. St. 1901, p. 2157], requires every distiller to keep a book in which shall be recorded certain facts specified with reference to his business; and section 3318 [U. S. Comp. St. 1901, p. 2164], after providing for the books to be so kept, declares that every person required to keep the books prescribed by such section shall on or before the 10th day of each month make a full and complete transcript of all the entries made therein during the month preceding, and, after verifying the same by oath, shall forward it to the collector of the district in which he resides. *Held*, in an action by a distiller to recover internal revenue taxes alleged to have been wrongfully imposed, that evidence that plaintiff's record book had been taken from him and carried to a certain collector's office, after which it was taken to the revenue agent's office at

Digitized by Google

G., and was last seen in 1893 or 1894, three years after the final disposition of a criminal case against plaintiff, and that search had been made in the office of the revenue agent, where it had last been seen, without proof that a search had been made in the collector's office for the transcript on which the assessment made was required to be filed, nor in the office of the clerk where the original record had been used in evidence in the criminal proceeding, was insufficient to justify the admission of oral evidence of contents of such record.

In Error to the Circuit Court of the United States for the Western District of North Carolina, at Asheville.

E. J. Justice (D. E. Hudgins, on the brief), for plaintiff in error.
A. E. Holton, for defendant in error.

Before BRAWLEY, PURNELL, and McDOWELL, District Judges.

PURNELL, District Judge. The exceptions raise the question whether it is competent to prove by parol the contents of a record, which a distiller is required by act of Congress (section 3303, Rev. St. [U. S. Comp. St. 1901, p. 2157]), to keep, when it is not shown that proper search has been made for the record, and that the same cannot be found by an insufficient search.

One of the exceptions appearing in the record is to allowing a question as to the contents of this record, and the other to allowing the answer to this question.

The printed record discloses that the controversy was as to whether the tax had been paid on certain distilled spirits shipped in packages numbered as alleged in the complaint. The tax was paid by the plaintiff on certain alleged irregularities, which were reported by a revenue agent, which he contended appeared from the said record, and which he alleged tended to show that the packages had been refilled and reshipped. The Commissioner of Internal Revenue assessed a further tax against the plaintiff in respect to this property. Plaintiff paid the tax under protest, and brought this action to recover the amount he had so paid.

It was material upon the trial to know what the said record so kept by the distiller contained. The defendant showed, as a basis for offering parol testimony as to the contents of the said record, (1) that the record was taken from the plaintiff and brought to the office of the collector of internal revenue in Statesville in 1890; (2) that it was later taken to the office of the revenue agent at Greensboro; (3) that the book had not been seen in the office of the revenue agent since 1893 or 1894; (4) that the criminal case against plaintiff growing out of this matter was disposed of in 1890; (5) that the revenue agent's office was not the proper place for this book to be kept after this criminal case was disposed of; (6) that the book should be in the office of the collector of internal revenue, or in possession of the court; (7) that careful search had been made for the book by the witnesses Patterson and Kirkpatrick in the office of the revenue agent, and the book had not been found. There was no evidence that search had been made in the collector's office or in the office of the clerk of the court, or that it was not in one of those offices.

Digitized by Google

The court erred in overruling the objection of the plaintiff in error to the question asked by the attorney for the defendant of the witness Kirkpatrick respecting the contents of the records kept by the plaintiff as a distiller, when said records were not shown to have been lost in the manner necessary before parol proof of their contents can be heard.

The court erred in overruling the objection of the plaintiff to the answer and testimony of the witness Kirkpatrick respecting the contents of the distillery books kept by the plaintiff as distiller, which said testimony, it is believed, tended to bar the plaintiff's recovery, when said books had not been shown to have been lost, and due search was not shown to have been made for them in their proper repository.

The statute (section 3318, Rev. St.), after providing for the books to be kept—the record referred to—also provides, section 5, Act March 1, 1879 [U. S. Comp. St. 1901, p. 2164], "that every person required to keep the books prescribed by this section, shall on or before the tenth day of each month make a full and complete transcript of all entries made in such book during the month preceding, and after verifying the same by oath, shall forward the same to the collector of the district in which he resides." A penalty is imposed for failure to comply with the statute. There is no evidence of a failure to make or file the transcript, which the collector is required to preserve until authorized by the Commissioner of Internal Revenue to destroy the same.

The law then requires two records to be kept: One by the distiller or rectifier, which he is required to preserve for two years. This was taken from him by the revenue officers. The other, a verified transcript, which was filed in the office of the collector of the district. The first was the best evidence, and the transcript the second best evidence, if, indeed, it was not of equal dignity as evidence. Both of these records were in the hands of officers of the government, and at least one in the custody of the defendant himself. It is not necessary to cite authority for the proposition that the best evidence must be produced, or an inability to produce it satisfactorily shown before secondary evidence can be permitted. No search was made. The evidence establishes the fact that the record was taken from the plaintiff and carried to the collector's office at Statesville in 1889. Shortly thereafter it was taken to the revenue agent's office at Greensboro, and there it was last seen in 1893 or 1894, three years after the final disposition of the criminal case against the plaintiff. It was further in evidence that search had been made in the office of the revenue agent, where this book was last seen. This the court held sufficient evidence of its loss to authorize secondary evidence to be introduced as to its contents. No search was made in the collector's office where the transcript—the one on which the assessment is made—is required to be filed, nor in the office of the clerk, where the original had been used as evidence in a criminal proceeding against the plaintiff. The revenue agent told the counsel his office was not the place where the record would be found, and intimated search should be made in the collector's or clerk's office. This is called flippant by counsel for the United States, but it seems to be good law.

Digitized by Google

The counsel for defendant in error cite and rely on Minor v. Tillotson, 1 Pet. 99, 8 L. Ed. 621, which has no application. In that case plaintiff offered to show a copy of a grant to Gen. Wade Hampton, under which the plaintiff claimed title to certain lands, which was excluded by the court on the ground that the plaintiff had not accounted for the loss of the original. It was in evidence that search had been made among the papers of Gen. Wade Hampton. Mr. Justice Thompson, in commenting upon this case, says:

"The presumption of the law, therefore, is that the original deed was in possession of Gen. Wade Hampton, and the plaintiff could not be bound to search for it elsewhere; there being no law in Louisiana requiring deeds to be recorded. And it was proved, as a matter of fact, that it was once in his possession—at what time, however, is not stated—and the question is whether such search was made for it as to justify the admission of secondary evidence. The rules of evidence are adopted for practical purposes in the administration of justice, and although it is laid down in the books as a general rule that the best evidence the nature of the case will admit of must be given, yet it is not understood that this rule requires the strongest possible assurance of the matter in question. The extent to which the rule is to be pushed in a case like the present is governed in some measure by circumstances. If any suspicion hangs over the instrument, or that it is designedly withheld, a more rigid inquiry should be made into the reason for its nonproduction. But when there is no suspicion, all that ought to be required is reasonable diligence to obtain the original."

Here there was other evidence, better evidence, record evidence, which could have been, and should in all fairness have been, produced. A more rigid inquiry should be made into the reason for its nonproduction. When a record is required by law to be kept, oral evidence of its contents cannot be offered unless the loss of the record is shown. Greenleaf on Evidence, § 86. The same is true of all writings, whether required to be kept or not, where the contents are material to the issue.

It is well settled that the loss of a writing must be proved, and that diligent search has been made therefor, before secondary evidence will be allowed for the purpose of proving its contents—"that a bona fide and diligent search has been unsuccessfully made for it in the place where it was most likely to be found, if the nature of the case admits such proof." As to the degree of diligence required, "the party is expected to show that he has in good faith exhausted, in a reasonable degree, all the sources of information and means of discovery which the nature of the case would naturally suggest, and which were accessible to him." Greenleaf on Evidence, § 558; Simpson v. Dall, 3 Wall. 460, 18 L. Ed. 265; Improvement & R. R. Co. v. Munson, 14 Wall. 442, 20 L. Ed. 867; Weatherhead's Lessee v. Baskerville et al., 11 How. 360, 13 L. Ed. 730; Bouldin and wife v. Massie's Heirs and others, 7 Wheat. 122, 5 L. Ed. 414; Rogers v. Durant, 106 U. S. 644, 1 Sup. Ct. 623, 27 L. Ed. 303; Renner v. The Bank of Columbia, 9 Wheat. 581, 682, 6 L. Ed. 166.

In Riggs v. Tayloe, 4 Wheat. 486, 6 L. Ed. 141, the Supreme Court lays down the rule:

"If a party intended to use a deed or any other instrument in evidence, he ought to produce the original if he has it in his possession, or, if the original is lost or destroyed, secondary evidence, which is the best the nature of the case allows, will then be admitted. The party, after proving any of these cir-

Digitized by Google

cumstances, to account for the absence of the original, may read a counterpart, or, if there is no counterpart, an examined copy, or, if there is no examined copy, he may give parol evidence of its contents."

This rule has been often cited with approval—notably in Williams v. United States, 1 How. 299, 11 L. Ed. 135; Burton v. Driggs, 20 Wall. 134, 22 L. Ed. 299; Stebbins v. Duncan, 105 U. S. 43, 27 L. Ed. 641.

In the case at bar there was a counterpart which was not looked for, and all the sources of information had not been exhausted; hence there was error in admitting parol testimony as to the contents of the record. The plaintiff in error is therefore entitled to a new trial.

Reversed.

(131 Fed. 67.)

VICTOR TALKING MACH. CO. v. AMERICAN GRAPHOPHONE CO.

(Circuit Court of Appeals, Second Circuit. April 21, 1904.)

No. 158.

1. PATENTS—INFRINGEMENT—TALKING MACHINES.

The Johnson patent, No. 679,896, for a sound box for talking machines, *held* not infringed, as to claims 7, 11, and 16.

Appeal from the Circuit Court of the United States for the District of Connecticut.

For opinion below, see 125 Fed. 30.

This cause comes here upon appeal from a decree of the United States Circuit Court for the District of Connecticut dismissing a bill alleging infringement of complainant's patent No. 679,896, granted August 6, 1901, to Eldridge R. Johnson, for a sound box for talking machines.

Horace Pettitt, for appellant.

Philip Manro, for appellee.

Before WALLACE, LACOMBE, and TOWNSEND, Circuit Judges.

PER CURIAM. The single question herein is that of infringement of claims 7, 11, and 16. Each of these claims is limited to a construction comprising "a tempered steel spring," or "a thin, twisted spring," having twisted ends. The essential element of the invention claimed in the patent in suit is the provision of means for "a very delicate connection between the diaphragm and the stylus-bar; also to provide an extremely sensitive mounting for the stylus-bar"; said means comprising a spring "made of finely tempered steel," each end being "twisted or bent in opposite directions," so as to secure a balance by the resultant high tension of the spring. The defendant does not use a finely tempered steel for said connection and mounting. Its attaching piece is made of low-grade sheet steel, soldered to the bar by a process which would necessarily destroy the temper, if any, in said piece. It clearly appears from the evidence, and was shown by a practical demonstration upon the hearing, that these attaching pieces were not resilient, but that

Digitized by Google

they remained in any position in which they might be bent or twisted. It further appears that defendant's attachment is not twisted, but is inserted as nearly flat as is practicable, in order to avoid all tension on the stylus-bar. Hence result two radically different constructions, based on opposing theories as to the effect of high tension as contrasted with low tension or no tension. These conclusions dispose of the contention of infringement as to all of said claims.

Claim 16 also covers "yielding gaskets, adjusted so as to prevent the said diaphragm from rattling, yet leaving it free to vibrate throughout its entire area." Such gaskets were old. The patentee, in a prior patent, had described and claimed a construction for so mounting the diaphragm that it would vibrate "practically evenly throughout its entire area," and the specifications and said claim of the patent in suit fail to suggest any definite degree of pressure, except such as may, in the judgment of the constructor, be best adapted to secure the best results. The patentee says:

"While I have described the diaphram as being practically free at its edges, it is clear that, while this construction of adjustment is preferable, my improvements herein described and claimed are applicable to constructions wherein the diaphram may be clamped at its edges."

The decree is affirmed, with costs.

(131 Fed. 68.)

LACKAWANNA IRON & STEEL CO. et al. v. DAVIS-COLBY ORE ROASTER CO.

(Circuit Court of Appeals, Third Circuit. July 5, 1904.)

No. 62.

1. PATENTS—CONSTRUCTION OF CLAIMS—ORE ROASTING FURNACES.

The Greer patent, No. 508,542, claims 3 and 8, for an ore roasting furnace, consisting of three vertical chambers, a combustion chamber, a stack, and an ore chamber between the other two, and communicating with each "at different points in its height," "substantially as described," "the combustion and ore roasting chambers being of substantially the same height," require all three chambers to be substantially coextensive, as shown in the drawings.

2. SAME—INFRINGEMENT.

The Greer patents, Nos. 495,883 and 508,542, for an ore roasting furnace, made up of three vertical chambers, each coextensive with the other two, the center one being a roasting chamber to hold the ore, and having openings at several points into each of the others, a combustion chamber on one side, fed from below by fuel gas intermixed with air, and a stack chamber on the other side, the draught created by which draws the flames from the combustion through the roasting chamber, were not anticipated, and are valid. Claims 3 and 8 of patent No. 508,542, covering the combination of the three chambers, and claims 3 and 4 of No. 495,883 and 4 and 5 of No. 508,542, covering a gas chamber in the base of the combustion chamber, having in its top exit openings for gas and air ports adjacent, construed, and *held* infringed.

Appeal from the Circuit Court of the United States for the Middle District of Pennsylvania.

For opinion below, see 128 Fed. 453.

Digitized by Google

Percy B. Hills, for appellants.
Henry N. Paul, Jr., and Joseph C. Fraley, for appellee.

Before ACHESON, DALLAS, and GRAY, Circuit Judges.

GRAY, Circuit Judge. This is an appeal from the decree of the Circuit Court for the Middle District of Pennsylvania, sustaining certain claims in two patents, granted to Robson C. Greer, for ore roasting and calcining furnaces, and assigned to the appellee, and decreeing an injunction and an accounting against the appellants, for an infringement thereof by an ore roaster first erected and operated at Scranton, Pa., and afterwards removed to Lebanon, Pa., where it now stands.

The Davis-Colby Ore Roaster Company, the appellee, is engaged in the business of erecting ore roasters, which are large furnaces in which iron ore (which is to be subsequently smelted or reduced in a blast furnace) is given a preparatory moderate heating in a draught of oxygen, for the purpose of expelling sulphur contained in the ore. Appellee's principal place of business is in Philadelphia, and the appellant, the Lackawanna Iron & Steel Company, is a large manufacturer of steel, having its main works, which were formerly at Scranton, Pa., in Buffalo, N. Y. Henry Wehrum, manager of the appellant company, is joined as a codefendant in the court below.

The bill of complaint charges the defendant with having built at Scranton, Pa., an ore roaster which infringes upon three of complainant's patents, covering what is known as the "Davis-Colby Ore Roaster." These three patents comprise the two Greer patents, above mentioned, and a patent granted to Owen W. Davis, also assigned to the appellee. Upon final hearing, the court below dismissed the bill as to the Davis patent, but sustained the two Greer patents, and found that they had both been infringed. The usual injunction and accounting was accordingly decreed upon these two patents, and from this decree the defendant has appealed.

The patents, therefore, brought before us upon this appeal are: No. 495,883, dated April 18, 1893, granted to Robson C. Greer, and as to which infringement is held as to claims 3 and 4 thereof; No. 508,542, dated November 14, 1893, to Robson C. Greer, infringement of which is held as to claims 3, 4, 5 and 8 thereof.

Infringement of the third and eighth claim of the Greer patent, No. 508,542, is admitted by the appellant, who claims, however, that the said claims are invalid by reason of anticipation. These claims are dominant and controlling in the structure of the Davis-Colby Ore Roaster, covering as they do the three coextensive vertical chambers, to wit, the combustion chamber, the air chamber and the draught equalizing chamber. The other claims involved are the third and fourth claims of Greer patent No. 495,883, and the fourth and fifth claims of Greer patent No. 508,542. These claims cover the gas and air inlets for the combustion chamber.

The discussion of the prior art, by appellant's counsel, in support of the defense of anticipation, is confined to the patent granted in 1870 to Knox and Osborn, No. 104,323, and to the patent to Valentine, No. 459,799, granted in 1891, and to the patent to Kleeman, No. 399,995,

Digitized by Google

granted in 1889. This latter reference, counsel for appellant speaks of as the one "most nearly in point," and practically confines his agument to a discussion of its features with relation to those of the Greer patents in suit.

The very full and exhaustive discussion by the learned judge of the court below of the claims of the two Greer patents, and of the prior art, especially with reference to the alleged anticipation of the Kleeman patent, would render a separate opinion by this court a mere paraphrase of what has been sufficiently said by the court below. We therefore content ourselves with adopting the opinion of the learned judge of the circuit court (reported in 128 Fed. 453), and we quote the same, omitting only those parts thereof referring to the Owen W. Davis patent, as to which there was a decree of no infringement, and to the Valentine and Sibley patents, which are so dissimilar, both in their object and in the structure claimed in them, as to require no further mention. In fact, none of them, except the Kleeman patent, seems to have been thought worthy of serious discussion by appellant's counsel. The opinion, with the exceptions noted, is as follows:

"The structure which is the subject of this litigation is what is known as an ore roaster, designed for expelling the sulphur from iron ore preliminary to smelting. Some ores have no sulphur but others are seriously impregnated with it, and this is particularly true of that obtained from the famous Cornwall banks near Lebanon, Pa., from which it has been the problem of a hundred years to successfully eliminate it. The complainants are the owners of three patents which are concerned with this subject, two issued to R. C. Greer —in April and November, 1893—and one to O. W. Davis, Jr., in May, 1894. Under these patents they undertook to erect at Lebanon in 1895 for the defendant company, who were operating the Colebrook furnaces there, an ore roaster with a capacity of one hundred tons daily, guarantied to roast down the sulphur to six-tenths of one per cent. This roaster did not work successfully at first, but was made to do so in the end, although there is some question whether this was not the result of favoring it with large sized ore. In order to overcome, however, existing difficulties permission was obtained to rebuild certain parts of it and plans for this purpose were submitted; and whatever lack of success there was or whatever was the cause of it the defendant company appear to have been sufficiently satisfied to ask for a proposition looking to the erection of a plant of five roasters at Scranton, Pa., where their principal works then were, in response to which the complainants made suggestion as to further changes which seemed desirable. But when it was found that a royalty of $1,200 for each roaster would be required Mr. Wehrum, the general manager of the defendants, refused to pay it and broke off the negotiations declaring he had never seen a patent which he could not get around. Immediately following this a roaster was put up by the defendants themselves under the direction of Mr. Wehrum, at Scranton, closely following in general design the plans and suggestions submitted by the complainants, certain changes however in matters of detail being introduced on which Mr. Wehrum at a later date applied for and obtained two several patents. This roaster was subsequently taken down and removed to Lebanon where it is now in use. The facts with regard to the original relations of the parties while given at this length, are not very material except as they go to show that infringement, if found to exist, is deliberate, and that Mr. Wehrum is properly joined as a defendant on account of his individual participation in it.

"The roasting furnace which is the subject of the two Greer patents is made up of three vertical chambers, each coextensive with the other two, the center one being designed to hold the ore to be roasted and having openings at several points into each of the others, a combustion chamber on the one side being fed from below by fuel gas intermixed with air to insure combustion and the heat and flame being drawn therefrom through the ore by means of the open-

Digitized by Google

ings provided for the purpose and the draft obtained from the stack chamber, the sulphur being expelled from the ore and carried off in the process. In the first Greer the form of furnace shown—although none is specified—is circular and the chambers annular; but in the second Greer, as in the defendants' structure, the chambers are rectangular. The latter construction is shown in the following diagrams taken from the second patent, one being an elevation in section and the other a ground plan.

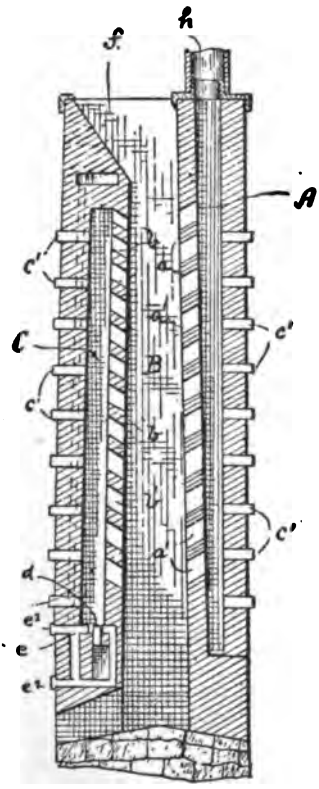

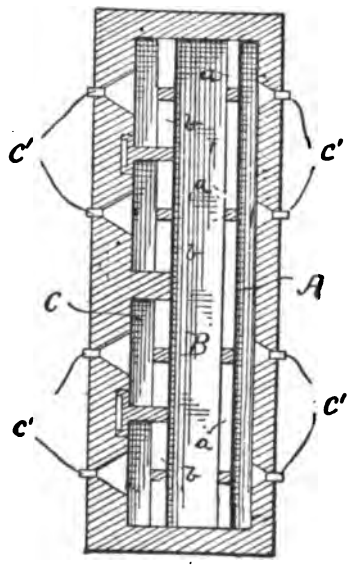

"It will be noted that the several chambers referred to are made high and narrow, and set side by side, the object being to present to the flame from the combustion chamber a thin body of ore, through which it can effectively penetrate, gradually calcining and desulphurizing it as it descends. The Greer invention is in some respects expressed in its broadest terms in the third and eighth claims of the second patent, as follows:

"'3. An ore roasting or calcining furnace, having a rectangular stack, a rectangular combustion chamber, and a rectangular ore roasting chamber, said roasting chamber being located between said combustion chamber and stack and communicating on one side at different points in its height with said stack and on its opposite side at different points in its height with the combustion chamber, said combustion and ore roasting chambers being of substantially the same height, substantially as set forth.'

"'(8) In an ore roasting and calcining furnace, the combination of the rectangular stack and the rectangular combustion chamber, located at opposite sides of the furnace, with the rectangular roasting chamber between said stack and combustion chamber, said combustion and roasting chambers being of

Digitized by Google

substantially the same height and said roasting chamber having communication on one side at different points in its height with said combustion chamber and on its opposite side at different points in its height with said stack, substantially as described.'

"Infringement of these claims is conceded but their validity is denied the defense being that they have been anticipated by other existing devices. The prior art is unusually free from anything that can be called an anticipation. The very primitive arrangement known as the Gjers kiln, which is nothing more than a great open bottom pot with alternate layers of ore and fuel, was still in use at the time the Greer roaster was patented and there is very little to fill in the intervening gap. The Knox and Osborn (1870) which is cited as a reference is a reducing furnace for the treatment of cinnabar and other volatile ores. It has, like the Greer, an ore chamber designed to hold a vertical body of ore, which is "roasted"—as it is said—as it passes downwards by the process of fuel combustion drawn into and through it from a fire-place adjoining by force of a draft chamber on the opposite side, the metallic vapors expelled from the ore being caught and condensed in appliances beyond. Passing by the fact that this is found in the reducing and not in the roasting art (notwithstanding the term applied to the process by the inventor) and that it relates to a volatile metal such as mercury, which is reduced from its fumes, broadly speaking the same elements which are found in the plaintiffs' structure may be said to be employed. But it is conceded that it does not anticipate the particular claims under discussion which require the combustion and the stack chamber to be of equal height with the ore chamber and rectangular in shape; and neither can it the other claims relied upon, to be presently mentioned, in view of the specific combinations there found. The suggestion of counsel that the operation on the ore is the same—which may well be doubted—loses sight of the fact that we are dealing with a structure and not a process, a point that is made per contra to sustain the Kleeman patent as an anticipation, of which more later.

* * * * * * * * * *

"This brings us to the Kleeman which is confidently relied on by the defendants, and is the only device that approaches structurally to anything like the one in suit. It is designed for the reducing or smelting of zinc ore and was patented in England in 1885, in Germany in 1887 (being allowed to lapse there, however, in 1891 for nonpayment of dues) and in the United States in 1889. Like the Knox and Osborn it is found in the reducing and not the roasting art, processes which are said to be metallurgically antithetical. It is not necessary, however, to go into the distinction between them, nor to determine how far on the strength of it the perception of the availability of the Kleeman structure for roasting purposes could be regarded as a transfer and adaptation to a nonanalogous art involving the exercise of invention. Instructive examples, where this has been held to be the case are to be found in Potts v. Creager, 155 U. S. 606 [15 Sup. Ct. 194, 39 L. Ed. 275]; Carnegie Steel Company v. Cambria Iron Company, 185 U. S. 403 [22 Sup. Ct. 698, 46 L. Ed. 968], and Tannage Patent Company v. Zahn, 70 Fed. 1003 [17 C. C. A. 552]; but I shall not stop to discuss them. Adhering strictly to the position that equivalency of structure is to control, the lacking feature of the Kleeman is a stack chamber. It has an ore or reducing chamber and a combustion chamber adjoining, and both are rectangular and vertically coextensive, with openings between to permit the ore in the one to be acted upon by the combustion proceeding from the other. So far there is a similarity which is not disturbed by the fact, that the two chambers are set end to end instead of side by side as in the Greer, the result of which is that the ore body is presented to the flame in its thickest direction instead of in a thin layer, this being a feature which cannot be relied upon under the terms of the patent, however important to the roasting process. But distinctly and positively the third member of the combination—an adjoining stack chamber—is wanting. In its place is an extension of the reducing chamber through which in flues or retorts the zinc fumes are conducted to a tubular recipient beyond, and then by tortuous passages to where they are condensed and reclaimed. Neither structurally nor as a matter of process is there any resemblance in this to the stack chamber found in the Greer. Whether the latter be regarded as a draft producing or

Digitized by Google

simply as a draft equalizing chamber auxiliary and leading on to the actual chimney or stack at a greater or less distance beyond, the material thing is that the roasting is complete when it is reached; while in the Kleeman the reducing process is continued on through the extension chamber, with its flues and retorts, into still other and ulterior parts. Differing in both function and structure as they do, the two chambers are in no sense equivalent; and there is nothing therefore in this reference on which to predicate an anticipation of what we have here. This disposes of everything that is cited against the claims under discussion and their novelty and validity being thus established and infringement conceded the bill to that extent at least must be sustained.

"But there are other important elements which it is claimed that the defendants have appropriated. Underneath the combustion chamber, for the purpose of supplying fuel, is a gas chamber with exits from it and air ports adjoining, to insure combustion; and opening into the combustion chamber at various points above are other inlets for a similar purpose. The object of this arrangement is to secure a suitable supply and admixture of gas and air and to secure it at the proper place. Bearing as this does on the efficiency of the furnace the devices employed must be regarded as patentable elements in the combination in which they are found. They are embodied in the third and fourth claims of the first Greer patent and the fourth and fifth claims of the second as follows:

"Patent 495,883.

" '(3) In an ore roasting or calcining furnace, the combination with the stack and an ore roasting chamber, of a combustion chamber having communication with said roasting chamber, said combustion chamber having in its base a gas chamber D formed in its top with exit openings d, and also having air ports e e' opening into it adjacent to the gas exits d.

" '(4) In an ore roasting or calcining furnace the combination with the stack and an ore roasting chamber, of a combustion chamber having communication with said roasting chamber, said combustion chamber having in its base a gas chamber D formed in its top with exit openings d and also having air ports e and e' opening into it adjacent to the gas exits d, and holes c' opening into it at various points, and means for closing said holes, c'.'

"Patent 508,542.

" '(4) In an ore roasting or calcining furnace, the combination with the rectangular stack and rectangular ore roasting chamber, of a rectangular combustion chamber having communication with said roasting chamber, said combustion chamber having in its base a gas chamber D with gas exists in the top of same and also having air ports adjacent to said gas exits, substantially as set forth.'

" '(5) In an ore roasting or calcining furnace, the combination of the rectangular stack, the rectangular ore roasting chamber communicating therewith, and the rectangular combustion chamber communicating with said ore roasting chamber, said ore roasting chamber being located between said combustion chamber and stack, and said combustion chamber having in its base a gas chamber D with gas exits in the top of same and also air inlet opening into it adjacent to said gas exits and air inlets opening into it at various points, substantially as set forth.'

"The same references as before are brought forward to invalidate these claims, but with no better success. It is true that in the Kleeman furnace, air inlets are shown on either side of the gas flue leading up into the combustion chamber from the gas chamber below; and there are openings in the outer wall of the combustion chamber similarly located to those of the Greer. So far as these particular features of the combination are concerned this might affect the novelty of the fourth and fifth claims of the second patent which are in general terms; but in the third and fourth claims of the first, which are narrower, one of the air inlets into the combustion chamber being specifically located between the gas exit and the ore chamber insuring the presence of a suitable supply of oxygen at this point. But it is not material to insist on any such saving distinction. It is to be remembered that in each of these claims we are dealing with a combination from which it does not in the least detract,

Digitized by Google

that certain of its features are not new; we are not concerned therefore, whether the air inlets in juxtaposition to the gas flue in the Kleeman furnace are duplicated in the claims of the second Greer or not. Novelty is to be predicated upon the combination found in each as a whole, and this includes the three co-ordinate, combustion, ore, and stack chambers, as to which in correlation, the prior art, as we have seen, has nothing to suggest.

"As to the infringement of these claims it seems to me there can be no serious question. So far, in either, as there is a reference by letter to the accompanying diagrams they are, of course, confined to the specific combination thus shown; but even on that basis the defendants' structure offends. A gas chamber at the base of the combustion chamber is employed, opening up from which into the combustion chamber is a set of exits and adjacent to them, that is to say between them and the ore chamber, is a corresponding set of air inlets. Leading in also through the outer wall of the combustion chamber, on the opposite of the gas exits are passages which have the same relative position as the second air inlet specified in the claims of the first Greer; while similar inlets or passages open into it at various points in tiers up to the top of the furnace. It is said that these inlets are merely dust holes for cleaning out the furnace, and that the gas from the combustion chamber forces its way out through them to such an extent as to require that they shall be kept permanently closed. But in one of the Wehrum patents—according to which the defendants' structure is supposed to be built—they are described as affording communication with the outer air, and in the other are said to furnish means for inspecting the ores in process of roasting, and while their use for cleaning purposes is also declared, this additional function does not do away with the others mentioned, which are the same as specified in the patents in suit. It is true that these openings in the defendants' roaster are closed with doors; but this is specified in the fourth claim of the first Greer as to the so-called 'peep holes'; and is shown as to the second air inlet in the other. But the variance, if any, is not material. The openings are none the less ports or inlets within the terms of the patents because means are provided for opening and closing them. Nor in judging of their equivalency is the particular use which may be made of them to govern. Structure, as has been observed, is what we are especially to look to and while the function to which a particular part is devoted is not to be altogether lost sight of, where the form is practically the same as in the case before us, the possible rather than the accidental use must decide.

* * * * * * * * * *

"As the result of the views so expressed the bill must be sustained as to the third and fourth claims of the first Greer and the third, fourth, fifth and eighth claims of the second."

Granting that the learned judge was mistaken, when discussing the structure of the Knox and Osborn patents, in saying that it was "conceded" that "it does not anticipate the particular claims under discussion, which require the combustion and the stack chamber to be of equal height with the ore chamber," it is clear to us, that though not conceded by the appellant, the learned judge was right in his opinion, that claims 3 and 8 of the second Greer patent, require all the chambers to be substantially coextensive. They expressly require that the ore chamber shall communicate "on one side at different points in its height with said stack, and on its opposite side at different points in its height with the combustion chamber." Substantial similarity between the extent of communication on the one side and on the other, is essential to this requirement. The drawings of the patents show the three chambers to be coextensive, and the expert testimony draws the inference of coextensiveness from the claims and specifications, the claims 3 and 8 closing with the words, "substantially as set forth," and "substantially as described," respectively. This language brings into the claim the par-

Digitized by Google

ticular description of the structure contained in the specifications, and the drawings to which they refer, and that description, as we read it, is of a structure containing a combustion chamber and an ore chamber of equal height, and a stack or draught producing chamber, coextensive therewith.

The decree of the court below is affirmed.

(131 Fed. 75.)

WESTERN TELEPHONE MFG. CO. v. AMERICAN ELECTRIC TELEPHONE CO. et al.*

(Circuit Court of Appeals, Seventh Circuit. April 12, 1904.)

No. 976.

1. PATENTS—INFRINGEMENT—TELEPHONE SWITCH BOARDS.

The Fisk patent, No. 521,461, for a telephone switch board, in which the fallen annunciator or drop is restored to its latched position automatically by the insertion of the connecting plug into the jack, was not anticipated in the prior art, and discloses invention. Also *held* infringed by the device of the Overshiner patents, Nos. 617,691 and 617,692.

Appeal from the Circuit Court of the United States for the Northern Division of the Northern District of Illinois.

Appellant, owner of letters patent No. 521,461, June 14, 1894, to Fisk, for a combined annunciator and spring jack for use in telephone switch boards, failed in its suit to hold appellees as infringers. In the earlier form of switch boards a bank of annunciators or drops, serially numbered, was placed above a bank of spring jacks, similarly numbered, so that any drop was distant, say, two feet from the correspondingly numbered jack. When a subscriber called, the operator's attention was attracted by the falling of the drop. The operator thereupon established communication with the calling subscriber by inserting a connecting plug in the jack that bore the same number as the fallen drop. At the same time the operator manually restored the drop.

Figure 1 of the Fisk patent and the description and claims are as follows:

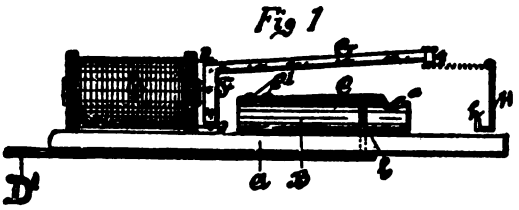

"My invention relates to switch boards for telephone exchanges and will be fully described hereinafter.

"In the drawings Figure 1 is a side elevation of a portion of a switch board embodying my invention. Fig. 2 is a top view of the same. Fig. 3 is a broken perspective, and Fig. 4 a detail. Figs. 5, 6, and 7, respectively, are side, top, and perspective views of a modification, and Figs. 8 and 9, respectively, side and top views of still another modification.

"A is the bottom of a compartment containing the spring jack B, which latter is hollow and notched as at a, to receive the bent end of a superimposed spring, C, the rivets, C', securing the spring, C, to the jack passing down to

---

* Rehearing denied May 27, 1904.

Digitized by Google

the compartment and securing a strip, D, to it, while at the same time making a metallic connection between the spring and the strip. The spring is also formed with an arm or offset, c, that normally rests upon a pin, b, which passing through the bottom, A, connects strip D′ to it. A spool, E, is secured to the bottom at the rear of the jack, and from the head of the spool are projected lugs, d, d, to which one edge of an armature, F, is pivoted, and from the upper portion of the opposite edge of this armature an arm, G, projects forward and at an acute angle to the width of the armature, and the outer end of this arm is formed with a lip, g, for engagement at the proper time with the bent flange, h, of a drop, H, to hold the drop up when the core of the spool is de-energized.

"The operation is as follows: When a call is made, the current from line goes through strip D, spring C, pin b, strip D′, into the spool, and thence to the battery, thus energizing the core and causing the armature to be attracted and to pull the support from under the drop. The plug, K, is then inserted by the operator, and connection between spring C and strip D′ broken, and the party called connected with the party calling through spring C, strip D, and plug. As the drop is released by the spool operating on the armature, it is lifted by the plug as it is inserted in the jack, for the drop hangs directly in front of the mouth of the jack, and is caught in its raised position and held up until another call is made, and the operator accomplishes in one motion what has hitherto required two motions.

"Having thus described my invention, what I claim as new, and desire to secure by letters patent, is:

"(1) The combination in a switch board of a jack, and a drop adapted to swing in front of it, an electro-magnet located in the rear of a jack, and an armature having a connection for catching and supporting the drop when it is raised by the entrance of the connecting plug as set forth.

"(2) The combination in a switch board of an annunciator drop adapted to hang in front of the jack and be lifted by the operator's plug as it is thrust into the jack, and a trigger or arm for catching it when so raised, and an electro-magnet and its armature and connections whereby the support is drawn from engagement with the drop when the magnet is energized as set forth.

"(3) The combination in a switch board of an electro-magnet, a jack located in front of it, and a drop hung in front of the jack, with a support for the drop when raised, and a connection between the support and armature for drawing the support from engagement with the drop when the magnet is energized as set forth."

Appellees' device is manufactured according to letters patent Nos. 617,691 and 617,692, January 10, 1899, to Overshiner, and is illustrated by the following drawing:

The record contains the following reference patents: 240,182, April 12, 1881, to Rein; 279,946, June 26, 1883, to Hazlet; 339,627, April 13, 1886, to Doolittle; 392,326, November 6, 1888, to Gould; and British 3,930, October 5, 1878, to McClure.

Josiah McRoberts and Charles C. Linthicum, for appellant.

Charles C. Bulkley, for appellees.

Before JENKINS, GROSSCUP, and BAKER, Circuit Judges.

BAKER, Circuit Judge. The main divide in this case, as presented in argument, lies along the line whether, as appellees insist, Fisk in-

Digitized by Google

tended the operator to use the plug as a tool with which to restore the drop while the operator was moving the plug to the mouth of the jack, or, as appellant contends, he conceived the idea of having the plug automatically and inevitably restore the drop by the plug's insertion into the jack. The expressions in the patent, "the drop * * * is lifted by the plug as it is inserted in the jack," "the drop * * * is raised by the entrance of the connecting plug [into the jack]," "the drop * * * to hang in front of the jack and be lifted by the plug as it is thrust into the jack, [and be held by] a trigger or arm * * * when so raised," leave no doubt in our minds that Fisk contemplated automatic restoration of the drop by the action of the plug during its insertion into the jack.

Did he disclose a practicable means for carrying this idea into effect? "Plug K" of the patent is nowhere specifically described or pictured. This omission and a comparison of the size of the jack opening with the distance through which the drop must be raised to reach the catch as exhibited in Figure 1, have led appellees to assert that the patent shows no way of restoring the drop through the action of the plug except by using the end of the plug to poke (as one might with his finger) the drop into its latched position before inserting the plug into the mouth of the jack. But the drawings are not required to be working plans. They must be read in connection with the description and claims, and any inferences arising from omissions or inconsistencies in the drawings must yield to a legally sufficient specification. "Many material objects and operations," says Robinson (vol. 2, § 491), "are so familiar to the inventor and his readers that their specific description, or even an allusion to them, would be superfluous. The law recognizes these difficulties in the way of an absolutely complete description, and overlooks the defects which they occasion, * * * though it omits appliances, modifications, or processes which persons skilled in the art would know were necessary and would themselves supply. Though it fails to describe implements and materials that are common in use, or methods of construction generally practiced in the arts, it may be complete enough to put before the already trained and informed intelligence of the reader an accurate and entire picture of the invention, from which he can understand it, construct it, and use it as easily as if all these familiar acts and objects were particularly described." The specification calls for a plug of such a form in relation to the form and location of the drop and jack that the mere act of inserting the plug into the jack will restore the drop to its latched position. Plugs with hafts to limit the thrust were common. It seems clear to us that any one who was familiar with existing switch boards and plugs, and who, on reading Fisk's patent, desired to embody the invention in the specific form of Figure 1, would see that the blade of the plug as it was thrust into the jack would not lift the drop into its latched position unless the bent portion of the drop were extended to equal the distance between the latch and the mouth of the jack, and that, if the drop were not so extended, the haft of the plug should be of a form and size to lift the drop into its latched position. That is, it would be purely a matter of the particular builder's choice whether he used the extension on the drop or on the plug or on both.

Digitized by Google

It is not denied that Fisk's device is useful and novel, and that the exercise of the inventive faculty was required in its production. The reference patents are claimed by appellees to limit the scope of the invention so as to save their device from infringing. Inasmuch as Fisk was the originator of the principle of restoring the drop by the contact therewith of the plug as it enters the associated jack, and the deviser of a practical embodiment of that principle, we deem the prior exhibitions of automatic restorations of the drop when dissociated from the jack, and accomplished by means dissimilar to the contact of the plug with the drop as the plug enters the jack, to be utterly irrelevant to the question of infringement, as they are confessedly insufficient as anticipations. If appellees are using Fisk's invention as it is defined in the patent, it is immaterial how much of the prior art they also employ. Appellees' drop is restored from a horizontal to a vertical position; Fisk's from a vertical to a horizontal, according to Figure 1 of the drawings. But in the description and claims there is no limitation upon the position of the drop except that it must be in front of the jack to the extent that the plug will lift it to its latched position as the plug enters the jack. Appellees' drop contacts with the plug through the cam projection on the drop. We have already stated that we regard it as immaterial whether the contact is effected through having the plug reach up or the drop reach down or both. We therefore find that appellees' device responds to the claims of the Fisk patent as we read it.

That Overshiner improved upon Fisk, and, indeed, developed an idea that never occurred to Fisk, is no warrant for using appellant's property without leave.

The decree is reversed, with the direction to enter a decree in appellant's favor for an injunction and an accounting.

(131 Fed. 78.)

STAR BRASS WORKS v. GENERAL ELECTRIC CO.

(Circuit Court of Appeals, Sixth Circuit. July 6, 1904.)

No. 1,317.

1. PATENTS—INFRINGEMENT—ELECTRIC RAILWAY TROLLEYS.

The Anderson patent, No. 412,155, for an improvement in electric railway trolleys, claim 8, which covers the combination with a trolley frame and wheel of metallic conducting brushes or contact springs between the hubs of the trolley wheel and the frame does not make the copper washer mentioned in the specification and optionally used on the end of the hub a part of the contact spring, but it is merely an extension of the hub. An essential feature of the claim is the placing of the spring or brush inside the frame for protection, and it is not infringed by the device of the Crockett and Johnson patent, No. 690,639, in which the spring is placed in a recess on the outside of the frame, making contact with the hub through heavy washers having lugs extending through the frame.

Appeal from the Circuit Court of the United States for the Western District of Michigan.

See 109 Fed. 950; 129 Fed. 102, 63 C. C. A. 604.

Digitized by Google

Fred L. Chappell, for appellant.
Betts, Betts, Sheffield & Betts, for appellee.

Before LURTON, SEVERENS and RICHARDS, Circuit Judges.

RICHARDS, Circuit Judge. This was a suit for an infringement of the eighth claim of the Anderson patent, No. 412,155, for an improvement in trolleys for electric railway service. It comes here on appeal from a decree holding there was an infringement, granting an injunction, and directing an accounting.

The claim involved is for "the combination, with a trolley frame and trolley wheel, of metallic conducting brushes, g^2, between the hubs of the trolley wheel and the said frame, to operate substantially as described." It has already been twice before this court. Its validity was sustained in Star Brass Works v. General Electric Co., 111 Fed. 398, 49 C. C. A. 409, and it was further construed and enforced in General Electric Co. v. International Specialty Co. (C. C. A.) 126 Fed. 755.[1] In the opinions in these cases the invention is described, and its patentable merits indicated. In both cases the metallic conducting brushes mentioned in the claim were presented by counsel and treated by the court as the contact springs, placed between the hub and the frame, which, bearing upon the former and attached to the latter, serve to conduct the electric current from one to the other. It was the location of these contact springs, inside the frame, and pressing upon the ends of the hub, which gave merit to the claim. So placed, they were not exposed to arcs, were protected from mechanical injury, and served the purpose of conducting brushes with the least possible friction. In the first case we said:

"Anderson, using a brush in common use in electrical appliances, places it entirely within the frame, where it is protected, serving the purpose intended with the least possible friction as the spring bears upon the end of the hub, and not upon the wheel or the periphery of the hub. * * * It may be true that Anderson has only taken the familiar contact spring or brush, and placed it in a protected position, but this change seems to have made the difference between a defective mechanism and a practical method of attaining the desired end. * * * The Anderson patent is not for the form of the brush, but is a combination patent, in which the location of the brush is the leading conception." 111 Fed. 398, 400, 49 C. C. A. 409.

In the second case we said:

"Contact springs or brushes had been used in the electric art before Anderson took out his patent. We held in the Star Brass Works Case that the merit of Anderson's invention consisted in taking this familiar contact spring or brush and placing it in a protected position, where it was secure from injury through the operation of the trolley, and, by bearing upon the ends of the hub instead of the periphery of the hub or wheel, materially reduced the friction in operation." 126 Fed. 755, 758, 61 C. C. A. 329, 332.

The same view was taken by Judge Kirpatrick in General Electric Co. v. Rahway Electric Light & Power Co. (C. C.) 96 Fed. 563, in which, after describing the necessity of protecting the contact device against stray arcs and against mechanical injury during shipment or while in operation, he says (page 567):

"How does Anderson's apparatus eliminate these defects in prior machines? First, the spring, g^2, is held in place by the rivet at one end and by the eye

[1] 61 C. C. A. 329.

Digitized by Google

embracing the spindle at the other. Hence there is no danger of these springs being bent outwardly, and thereby fail to bear on hub of the trolley, or so as to come in contact with a switch box, or any external object. It is confined simply and securely in its proper position between the hub of the trolley and the frame. Moreover, the spring contact does not bear on the periphery of the wheel, nor yet on the periphery of the hub, but on the end of the hub, whereby there is a minimum of speed of the wheel on the brush and a minimum degree of retarding action of the brush on the wheel."

It does not appear that in either of these cases any attention was paid by counsel or court to the copper discs or washers, which, for the apparent purpose of reducing the friction and wear on the contact spring or conducting brush, it is stated in the specification the applicant prefers to add "at the ends of the hubs." The patent itself treats these copper discs or washers as quite distinct from the metallic conducting brushes. The copper discs are marked "g," the metallic conducting brushes "g^2," and it is stated in the specification that "the copper or other equivalent brushes, g^2," bear against the outer sides of the copper discs when these are added at the ends of the hubs. The copper discs may or may not be used, and, if used, are treated as added at the ends of the hubs; in other words, as an addition to the hubs. The conducting brushes bear either against the ends of the hubs or against the outer sides of the washers when these are added to the hubs.

In the former cases in this court counsel for the patent treated the metallic conducting brushes as the patent does—as contact springs, bearing against the ends of the hub or the washers (if they are used), and protected by being placed between the hub and the frame. The leading expert for the patent said in the first case: "It is beyond question that for many years such brushes, g^2, have been given a uniform pressure upon the hub of the trolley wheel or the copper washer, g, sufficient for all practical purposes." And counsel themselves stated in their brief that the testimony proved beyond doubt that the conducting brushes of complainant's device were spring brushes; that they bore evenly, and for all practical purposes, over substantially the whole surface of the washer of [or] the ends of the trolley wheel hub. In their brief in the second case they submitted an illustration of a view in perspective of the second form of the Star Brass trolley harp and contact brushes held to infringe in the first case, which was reproduced in the opinion in the second case. 126 Fed. 756.[2] In this the washer and conducting brush are designated as separate and distinct pieces. The brush is marked "Spring Conducting Brush," the top of the brush is marked "Top of Brush Bearing on Washer," while the washer is marked "Washer Bearing on End of Hub." In both the former cases the contact or "business end" of the conducting brush or contact spring was placed between the hub and the frame, and bore either against the end of the hub or the washer. The alleged infringing device contains no contact spring located between the hub and the frame. The contact spring is forked, and is placed on the outside of the frame or harp, being countersunk or recessed therein. Connection with the hub is secured through a "massive" washer having lugs which extend through slots in the frame. The forked spring outside the frame presses upon these lugs, forcing the

[2] 61 C. C. A. 329.

Digitized by Google

washer against the hub inside. The court below took the view that the defendant had taken the conducting brush of the Anderson patent and divided it into two parts, a spring and a washer; the spring technically outside the frame, but really protected by it, and the washer, which constituted the contact part or "business end" of the brush, located between the hubs and the frame, constituting a mere colorable modification of Anderson's device.

It is no doubt true that when a washer is placed between the hub and the spring, the current must pass from the hub through the washer before it reaches the spring, and therefore in one sense the washer is a part of the conducting device; but in another it is a mere addition to or extension of the hub, and the patent so treated it. The claim was not based upon the location of the washer. The washer might or might not be used. It was based upon the location of the brush or spring which pressed against the hub or washer and carried the electricity to the frame. The washer needed no protection, but the brush or spring did. Judge Kirkpatrick, in his opinion, pointed out the need of protecting the contact end of the brush, which bore either upon the washer or the hub. This spring, a delicate thing, placed outside, was liable not only to be injured by violent contact with other objects, but to be destroyed by stray arcs, and Anderson therefore placed it inside.

The defendant's device, which is covered by a patent to F. P. Crockett and O. P. Johnson, being No. 690,639, places the spring on the outside of the harp. It is protected against injury from without by being placed in a deep recess, and against injury from within by the intervening frame. A patent for protecting a spring by locating it on the inside of the trolley harp is not infringed by placing it in a recess on the outside, any more than a patent for protecting it by countersinking it on the outside is infringed by locating it wholly on the inside. Although the result may be the same, the device is different, and the patent covers only the device.

If the contact spring in the defendant's device, corresponding with the metallic brush of the complainant, is not located between the hubs and the frame and protected by being entirely within the latter, is the fact that the spring presses upon the lugs of the washer, which contacts with the hub inside the frame, in itself sufficient to constitute an infringement? The eighth claim of the Anderson patent was a narrow one, and we sustained it not simply upon the ground that the electric current was taken from the wheel at the hub, but upon the ground that the metallic conducting brush, which pressed against the hub or washer, was a spring requiring protection, and was protected by being placed between the hub and the frame, inside the latter. The defendant uses another method of protecting the spring. In our opinion, there is no infringement.

The judgment of the court below is therefore reversed.

Digitized by Google

(131 Fed. 452.)

UNITED STATES v. GEDDES.

(Circuit Court of Appeals, Sixth Circuit. June 8, 1904.)

No. 1,270.

1. SAFETY APPLIANCE ACT—NONCOMPLIANCE—INTERSTATE TRAFFIC—INTRASTATE RAILROADS.

Defendant, as receiver, operated a narrow gauge railroad wholly in Ohio, which connected at one of its termini with the B. & O. Railroad. Defendant refused to ship interstate traffic over his road, either received from or delivered to the B. & O. road, under a through bill of lading, or any other arrangement, except that, on the delivery of such freight shipped over defendant's road under a local bill of lading at its terminus, it should be received for transportation without the state by the B. & O. road under another bill of lading, the latter road assuming defendant's local freight charge, and defendant, on receiving such shipments from the B. & O. for transportation to points on his line, charged a local freight tariff from the receiving point to destination, also assuming payment of the B. & O.'s advance charges, settlement of freight between the parties being made weekly. *Held*, that defendant's railroad was not engaged in interstate commerce within the meaning of, and was, therefore, not liable for penalties for noncompliance with, the safety appliance act (Act Cong. March 2, 1893, c. 196, 27 Stat. 532, as amended by Act Cong. April 1, 1896, c. 87, 29 Stat. 85 [U. S. Comp. St. 1901, p. 3175]), requiring common carriers engaged in interstate commerce by railroad to equip their cars with automatic couplers, etc.

In Error to the District Court of the United States for the Southern District of Ohio.

This was a suit on behalf of the United States for the recovery of penalties provided by Act Cong. March 2, 1893, c. 196, § 6, 27 Stat. 532, as amended by Act Cong. April 1, 1896, c. 87, 29 Stat. 85 [U. S. Comp. St. 1901, p. 3175], known as the "Safety Appliance Act." The sections of the act involved are:

"Section 1. That from and after the 1st day of January, 1898, it shall be unlawful for any common carrier engaged in interstate commerce by railroad to use on its line any locomotive engine in moving interstate traffic not equipped with a power driving wheel brake and appliances for operating the train brake system, or to run any train in such traffic after said date that has not a sufficient number of cars in it so equipped with power or train brakes that the engineer on the locomotive drawing such train can control its speed without requiring brakemen to use the common hand brake for that purpose."

"Sec. 2. That on and after the 1st day of January, 1898, it shall be unlawful for any such common carrier to haul or permit to be hauled or used on its line any car used in moving interstate traffic not equipped with couplers coupling automatically by impact, and which can be uncoupled without the necessity of men going between the ends of the cars."

"Sec. 6. That any such common carrier using any locomotive engine, running any train, or hauling or permitting to be hauled or used on its line any car in violation of any of the provisions of this act, shall be liable to a penalty of one hundred dollars for each and every such violation, to be recovered in a suit or suits to be brought by the United States District Attorney in the district court of the United States having jurisdiction in the locality where such violation shall have been committed; and it shall be the duty of such District Attorney to bring such suits upon duly verified information being lodged with him of such violation having occurred; and it shall also be the duty of the Interstate Commerce Commission to lodge with the proper district attorneys information of any such violations as may come to its knowledge," etc.

The petition contains four causes of action, alleging four violations of the law, based upon the movement of four cars used in moving interstate traffic, but not equipped with automatic couplers. A jury was waived and the court found in favor of the defendant on the ground that the railroad operated by

Digitized by Google

him was not engaged in interstate commerce and that the cars complained of were not used in moving interstate traffic.

The Ohio River & Western Railway Company (operated by the defendant as receiver) was, at the time of the acts complained of, a common carrier owning and operating a narrow gauge railroad about 100 miles long, wholly within the state of Ohio, from Bellaire, on the Ohio river, to Zanesville, a town in the interior. At Bellaire it connected with the Baltimore & Ohio road, in the sense that it received from the Baltimore & Ohio freight from other states marked for points on its line, and delivered to the Baltimore & Ohio freight from points on its line marked for other states, in the following manner: There was no interchange or common use of cars, the gauges of the two roads being different. The cars of the defendant road were used only on its own line. But a transfer track ran from the main line of the Baltimore & Ohio to the terminal station of the defendant road, so that the freight cars of the two roads could be placed alongside adjoining platforms and the transfer of freight made by the use of trucks handled by the Baltimore & Ohio men. No through bills of lading for such freight were issued by either road, no through rate was fixed by mutual arrangement, and no conventional division of a through freight charge was made. Each road charged and collected its local freight rate in this way: Freight transported to Bellaire by the defendant road and marked for a point in another state was delivered to the agents of the Baltimore & Ohio, with an expense or transfer bill, which stated the original point of shipment, the consignee and place of consignment, and the freight charges of the delivering road. Waybills also accompanied the traffic. On taking charge of the freight, the Baltimore & Ohio would assume the payment of the freight charges of the defendant road, collecting the entire charges on delivering the freight at its destination. The same method was pursued with respect to freight coming from outside Ohio, and destined for a point on the line of the defendant road within Ohio, except that the agents of the Baltimore & Ohio at Bellaire would bring the traffic to and put it in the cars of the defendant road. On receiving the freight, with the expense or transfer bill, the defendant road would assume the charges of the Baltimore & Ohio, collecting the entire freight charges at the destination. There were weekly settlements between the two roads of these collections, and the payment of any balance found to be due on such settlements; but each road became responsible for the freight charges of the other, whether they were ever collected from the consignee or not. Such transfers of traffic were made nearly every day. Each company's freight charges were in accordance with its own rates.

The acts upon which the suit was based were the hauling in a car not equipped with automatic couplers, from Summerfield, Ohio, to Bellaire, Ohio, of 37 cases of eggs destined for Pittsburg, Pa., and delivered at Bellaire to the Baltimore & Ohio road for shipment there; and the hauling in three separate cars not equipped with automatic couplers, from Bellaire, Ohio, to Woodsfield, Ohio, of certain coils of wire rope shipped from Philadelphia, consigned to Woodsfield, and transferred from the Baltimore & Ohio to the defendant road at Bellaire for shipment to Woodsfield. It does not appear that any through bills of lading were issued for this freight. The form of bill of lading used by the defendant company was produced. It had on it the following printed notice: "This blank must in no case be filled with the name of any station or place beyond the line of this company's road."

Sherman T. McPherson and L. A. Shaver, for the United States.
W. F. Hunter, for defendant in error.

Before LURTON, SEVERENS, and RICHARDS, Circuit Judges.

RICHARDS, Circuit Judge, after making the foregoing statement of the case, delivered the opinion of the court.

In the cases of The Daniel Ball, 10 Wall. 557, 565, 19 L. Ed. 999 (decided in 1870), and Coe v. Errol, 116 U. S. 517, 528, 6 Sup. Ct. 475, 479, 29 L. Ed. 715 (decided in 1885), it was held that:

Digitized by Google

"Whenever a commodity has begun to move as an article of trade from one state to another, commerce in that commodity between the states has commenced."

In the former case it is said:

"The fact that several different and independent agencies are employed in transporting the commodity, some acting entirely in one state, and some acting through two or more states, does in no respect affect the character of the transaction. To the extent in which each agent acts in that transportation, it is subject to the regulation of Congress." Page 565, 10 Wall., 19 L. Ed. 999.

And in the latter:

"But this movement [from state to state] does not begin until the articles have been shipped or started for transportation from the one state to the other. The carrying of them in carts or other vehicles, or even floating them to the depot where the journey is to commence is no part of that journey. * * * Until actually launched on its way to another state, or committed to a common carrier for transportation to such state, its destination is not fixed and certain." Page 528, 116 U. S., page 479, 6 Sup. Ct., 29 L. Ed. 715.

The Daniel Ball Case involved the authority of the United States to license a vessel engaged in transportation on its navigable waters, and Mr. Justice Field, who delivered the opinion, took pains to say (page 566, 10 Wall., 19 L. Ed. 999):

"We are not called upon to express an opinion upon the power of Congress over interstate commerce when carried on by land transportation."

In 1887, Congress passed what is known as the "Interstate Commerce Act" (Act Feb. 4, 1887, c. 104, § 1, 24 Stat. 379 [U. S. Comp. St. 1901, p. 3154]), and, not content with the definition to be drawn from these cases, in the first section defined as follows, common carriers engaged in interstate or foreign commerce made subject to the act:

"The provisions of this act shall apply to any common carrier or carriers engaged in the transportation of passengers or property wholly by railroad, or partly by railroad and partly by water, when both are used, under a common control, management, or arrangement, for a continuous carriage or shipment, from one state or territory of the United States, or the District of Columbia, to any other state or territory of the United States or the District of Columbia, or from any place in the United States to an adjacent foreign country, or from any place in the United States through a foreign country to any other place in the United States, and also to the transportation in like manner of property shipped from any place in the United States to a foreign country and carried from such place to a port of transshipment, or shipped from a foreign country to any place in the United States and carried to such place from a port of entry either in the United States or an adjacent foreign country."

In Texas & Pacific Railway v. Interstate Commerce Commission, 162 U. S. 197, 16 Sup. Ct. 666, 40 L. Ed. 940, the Supreme Court, speaking by Mr. Justice Shiras, after quoting the above provisions, said (page 212, 162 U. S., page 672, 16 Sup. Ct., 40 L. Ed. 940):

"It would be difficult to use language more unmistably signifying that Congress had in view the whole field of commerce (excepting commerce wholly within a state), as well that between the states and territories as that going to or coming from foreign countries."

If this statement be accurate, if Congress, by this definition, did mean to include within its regulating power every carrier engaged in interstate or foreign commerce, then to be a "common carrier engaged in

Digitized by Google

interstate commerce by railroad," within the meaning of the Safety Appliance Act, a railroad must be "engaged in the transportation of passengers or property wholly by railroad or partly by railroad and partly by water when both are used, under a common control, management, or arrangement for the continuous carriage or shipment" from one state to another. The court below, taking the view that the interstate commerce act and the safety appliance act are in pari materia, and referring to the above definition, reached the conclusion there was no arrangement between the two roads for a continuous carriage or shipment from one state to another, and therefore found in favor of the defendant, holding it was not engaged in interstate commerce.

It is vigorously insisted that the acts are not in pari materia, and that Congress, by the use of broader terms in the later act, intended a wider application of its provisions. In one sense, the two acts are in pari materia, in another, not. Both relate to the regulation of commerce among the states under the supervision of the Interstate Commerce Commission. The first deals largely with rates and fares—the cost of the commerce; the second with locomotives and cars—the instrumentalities used to carry it on. The first was intended, primarily, to protect shippers; the second, railroad employés; both, ultimately, to promote the best interests of the public. In each act, Congress seeks to regulate commerce. What commerce? Commerce among the several states. It was desirable, therefore, in the first act, to define that commerce. Having done this once, it was sufficient, in the second act, to apply its provisions to carriers "engaged in interstate commerce," adopting the definition of the first. This brings us to the question whether the defendant was "engaged in interstate commerce" within the meaning of the congressional definition.

In the case of Cincinnati, New Orleans & Texas Pacific Railway v. Interstate Commerce Commission, 162 U. S. 184, 16 Sup. Ct. 700, 40 L. Ed. 935 (the Social Circle Case), it was held that the Central Railroad of Georgia was engaged in an act of interstate commerce in transporting from one point to another in Georgia freight which had been shipped from Cincinnati, Ohio, to Social Circle, Ga., under a through bill of lading, with a through charge and an arrangement for a conventional division of the entire charge among the railroads contributing to the movement of the traffic. Mr. Justice Shiras, speaking for the court, said (page 193, 162 U. S., page 704, 16 Sup. Ct., 40 L. Ed. 935):

"All we wish to be understood to hold is that when goods shipped under a through bill of lading, from a point in one state to a point in another, are received in transit by a state common carrier under a conventional division of the charges, such carrier must be deemed to have subjected its road to an arrangement for a continuous carriage or shipment within the meaning of the act to regulate commerce. When we speak of a through bill of lading, we are referring to the usual method in use by connecting companies, and must not be understood to imply that a common control, management, or arrangement might not be otherwise manifested."

"It may be true," said the same Justice (page 191, 162 U. S., page 703, 16 Sup. Ct., 40 L. Ed. 935), "that the Georgia Railroad Company, as a corporation of the state of Georgia, and whose entire road is within that state, may not be legally compelled to submit itself to the provisions of the act of Congress, even when carrying between points in Georgia freight that has been brought from another state."

Digitized by Google

In the present case there was no through bill of lading, no through charge, no conventional division thereof among the carriers, and no arrangement for a continuous carriage or shipment, unless the method of transfer by which the receiving road assumed the payment of the charges of the delivering road constituted such an arrangement. If it did, then the only way a local road can escape participation in an arrangement for a continuous carriage or shipment of freight from one state to another is to refuse altogether to handle such freight; and it cannot do this, for, as a common carrier, it is bound to receive and transport from one point to another on its line, freight offered it for transportation, regardless of the origin or destination of the freight; so, notwithstanding the fact that, in the cases of Osborne v. Florida, 164 U. S. 650, 17 Sup. Ct. 214, 41 L. Ed. 586, Pullman Company v. Adams, 189 U. S. 420, 23 Sup. Ct. 494, 47 L. Ed. 877, and Pennsylvania R. R. Co. v. Knight, 192 U. S. 21, 24 Sup. Ct. 202, 48 L. Ed. 325, the Supreme Court apparently recognized the privilege of express, sleeping car, and railroad companies to limit the nature of their business, making it local or interstate or both, as they please, under this construction of the law, there could be no option or choice on the part of the local road as to whether it would or would not engage in interstate commerce, and thus subject itself to the acts of Congress regulating that business.

The defendant company did all it could to keep its business local. It limited its interest, so far as it could, to the transportation of the freight over its own line. It made no arrangement with the Baltimore & Ohio for through carriage either way. It was interested in none. It shared in none. It was interested only in its own local charge, and whatever arrangement it made was with a view simply of securing this. The fact that certain goods transported by it were marked for other states or received from other states did not make it a party to any arrangement for their interstate transportation in either direction. The part it performed was purely local. The interstate portion of the transportation was performed by the Baltimore & Ohio. When it delivered the goods to that road, they were still in Ohio. They might have stopped there for aught it cared. It had made no arrangement for their transportation any further. And so with the goods it received from the Baltimore & Ohio. They were offered to it in Ohio, and it was a matter of indifference to it where they came from. It had been no party to their transportation into Ohio. It received them virtually as Ohio goods, and carried them from one point to another in the state.

Taking the view that the defendant road, at the time of the acts complained of, was not engaged in interstate commerce, and that the cars which hauled the cases of eggs from Summerfield to Bellaire, and the coils of rope from Bellaire to Woodsfield, were not engaged in "moving interstate traffic," we affirm the judgment of the lower court.

Digitized by Google

(131 Fed. 577.)

THOMPSON et al. v. SCHENECTADY RY. CO. et al.

(Circuit Court of Appeals, Second Circuit. April 5, 1904.)

No. 167.

1. JUDGMENT—CONCLUSIVENESS—PARTIES.

Where whatever rights complainants acquired in the property of a street railway company were acquired after a foreclosure decree had been entered, but before the decree had been executed by a sale of the mortgaged property, under an agreement between complainants and the street railway company's receiver, and complainants were not parties to the foreclosure proceeding, they were not bound by the decree therein.

2. STREET RAILWAYS—FRANCHISE—SURRENDER—CONSENT OF STATE.

Where the consent of the state was not obtained to a contract between complainants and the receiver of a street railway company and a city, by which the railway company was permitted to permanently discontinue its railway on a certain street, such contract was void as against public policy, the right to operate the same being a franchise granted by the state on considerations of public welfare.

Appeal from the Circuit Court of the United States for the Northern District of New York.

See 119 Fed. 634; 124 Fed. 274.

Marcus T. Hun, for railway company.

A. H. Van Brunt, for trust company.

Edward W. Paige, for appellees.

Before WALLACE, LACOMBE, and TOWNSEND, Circuit Judges.

WALLACE, Circuit Judge. This is an appeal from a decree for the complainants, and presents the question whether, upon the conceded facts, as appearing by the bill of complaint, the complainant was entitled to relief. The bill is one in the nature of a bill of review to revise a decree of the United States Circuit Court for the Northern District of New York in an action brought by the Central Trust Company against the Schenectady Street Railway Company for the foreclosure of a mortgage made by the railway company. The decree was entered September 1, 1894. Included in the property covered by the mortgage was that part of the railroad of the mortgagor which had been constructed along Washington avenue, in the city of Schenectady, and this part of the railroad was included in the property decreed to be sold, and was sold under the decree January 12, 1895, to Kobbe and others. The sale was confirmed, and a conveyance made to the purchasers February 8, 1895. The complainants are property owners upon Washington avenue, who seek to restrain the Schenectady Railway Company, a corporation, which acquired the mortgaged premises February 17, 1895, from operating its road upon a portion of that street. They assert by their bill that during the pendency of the foreclosure action the receiver in the action, appointed by the court, was in possession of the mortgaged property, and joined with certain property owners upon Washington avenue, including some of the present complainants, in a petition to the common council of

Digitized by Google

the city of Schenectady asking that body to consent and authorize the mortgagor to discontinue permanently the running of its cars upon said street and to remove its track, and that October 2, 1894, the common council adopted a consenting resolution.

The specific relief prayed for by the bill is that the foreclosure decree be revised so as to omit the Washington avenue property from the property therein, and so as to provide that the agreement between the receiver and the Washington avenue property owners and the city of Schenectady be approved by the court, and be binding upon all the parties to the action; and that the defendants be permanently enjoined from doing any act in the construction or operation of any sort of a railroad upon any part of the street.

Whether the matters set forth in the bill make a case which, assuming it to be one entitling the complainants to relief in equity, can be appropriately presented by a bill or a supplemental bill in the nature of a bill of review, or which can be presented only by an original bill, we need not decide. The original suit decided nothing which could prejudice the complainants. They were not parties, and could not be affected by any decree. Whatever rights they acquired in the mortgaged premises were acquired after the decree had been entered, but before the decree had been executed by a sale of the mortgaged premises by an agreement made with the receiver. Doubtless they could have applied to the court for an approval of that agreement and a modification of the decree recognizing and giving effect to it. The requisite diversity of citizenship to maintain an original bill in this court does not exist between the parties. We think the facts did not afford any ground of relief, whether by a bill of review, or one in the nature of such a bill. The relief which they seek to obtain is the enforcement of an agreement which they assert was constituted by the action of the receiver, the property owners, and the common council of Schenectady, and by which they claim that the parties to the foreclosure action and their successors in title to the mortgaged premises are bound to an abandonment of the right to operate a railroad upon part of the street; and they urge that the court can now approve the action of the receiver and ratify the agreement with the same effect as though an application had been made and granted in the foreclosure suit. To do this would be, in effect, to decide that the court, whose officer the receiver was, would have approved the agreement if an application had been made to it, or ought to have approved it had an application been made. The approval of a receiver's contract rests in the sound discretion of the court. It will not be granted merely because the agreement is for the interests of the immediate parties to the suit, and is often determined upon consideration of the interests of those who are not parties, or of the public. It is apparent, from the facts disclosed by the bill, that the so-called agreement was made in the supposed interests of the receiver and the parties to the foreclosure action, and in order to lift the burden of maintaining an unprofitable part of the railroad. It does not appear by the bill that the receiver obtained the consent of the Railroad Commissioners or of the state to the agreement, and the argument for the complainants concedes that such consent was not

Digitized by Google

obtained. The right to construct and operate a street railway is a franchise granted by the state upon considerations of the public welfare; and any contract which disables the corporation from performing its functions without the consent of the state, and made to relieve the corporation of the burden which it has assumed, is void as against public policy. That consideration alone would have justified and compelled the court in the foreclosure suit to withhold its sanction to the agreement. It presents an insuperable objection to the making of any new decree which would now sanction the agreement. The very recent decision of the highest court of the state in actions between some of the present parties is authoritative to the effect that the attempted abandonment was a nullity because against public policy. Thompson v. Schenectady Railway Company (N. Y.) 70 N. E. 213. The court say:

"Within the principle of the cases cited, it is obvious that the public has an interest in that portion of the Schenectady Railway which was constructed in Washington avenue, which could not be destroyed or abandoned without the consent of the state."

The authorities cited in the opinion in that case abundantly prove the proposition decided, and no further reference to them is necessary. If the decision had been rendered before the decision in the present case, and brought to the attention of the learned judge of the court below, doubtless he would have dismissed the bill.

The decree is reversed, with costs, and with instructions to the court below to dismiss the bill.

(130 Fed. 843.)

WRIGHT, Internal Revenue Collector, v. MICHIGAN CENT. R. CO.

(Circuit Court of Appeals, Sixth Circuit. June 16, 1904.)

No. 1,297.

1. INTERNAL REVENUE—STAMP TAX ON BILLS OF LADING—DUPLICATES.

In paragraph 6 of Schedule A of the war revenue act of June 13, 1898 (30 Stat. 458, c. 448 [U. S. Comp. St. 1901, p. 2304]), which requires a stamp to be affixed to each bill of lading, manifest, etc., "and to each duplicate thereof," the word "duplicate" is to be defined in accordance with the meaning given it generally in business, as one of two instruments, each of which is original, and intended to have the force of an obligation irrespective of the other, and not as meaning merely a copy.

2. SAME.

A railroad company issued bills of lading marked "Original," to each of which was attached a detachable copy, marked as such, and containing a statement thereon that it was not an original bill of lading, but merely a memorandum for filing, as an acknowledgment that a bill of lading had been issued for the goods described. *Held*, that such copies were not duplicate bills of lading, within the meaning of paragraph 6 of Schedule A of the war revenue act of June 13, 1898 (30 Stat. 458, c. 448 [U. S. Comp. St. 1901, p. 2304]), and were not required to be stamped; nor were they

Digitized by Google

rendered such by the fact that in some instances the company recognized them in making deliveries to the consignee, waiving the production of the original.

8. EVIDENCE—EXPERT TESTIMONY—CONSTRUCTION OF INSTRUMENT.

The question whether a written instrument is a duplicate of another, within the meaning of a statute, is not one upon which expert testimony is competent, but is one for the court.

In Error to the Circuit Court of the United States for the Eastern District of Michigan.

Wm. D. Gordon, U. S. Atty., and James V. D. Willcox, Asst. U. S. Atty., for plaintiff in error.

O. E. Butterfield (Henry Russel, of counsel), for defendant in error.

Before LURTON, SEVERENS, and RICHARDS, Circuit Judges.

SEVERENS, Circuit Judge. This writ of error brings up the record of a case wherein the Michigan Central Railroad Company brought suit against the plaintiff in error to recover the sum of $6,-838.12, which had been levied against the company as an internal revenue tax by the Commissioner of Internal Revenue, and paid by it under protest.

Between July 1, 1898, and June 30, 1901, during which period the internal revenue act of June 13, 1898, c. 448, 30 Stat. 448 [U. S. Comp. St. 1901, p. 2286], was in force, the railroad company issued 683,812 bills of lading marked "Original" to shippers of freight over its lines, to each of which was detachably annexed a copy (or duplicate) thereof, marked "Copy," and containing transversely along the left-hand margin thereof the following words:

"Take notice, that this is only a copy of a bill of lading or shipping receipt issued for the property herein described or referred to, and it is not itself to be regarded or considered as a bill of lading or contract of any kind under any circumstances, but merely an acknowledgment that a bill of lading or shipping receipt for said property has been issued."

This was the general form as prepared for use. But as each was issued the following words were inserted in the body of the instrument by a rubber stamp:

"This is not the original bill of lading or shipping receipt, nor a copy or duplicate covering the property named hereon. It is intended solely for filing or record as a memorandum acknowledgment that a bill of lading or shipping receipt has been issued."

A form of shipping order to be filled in by the shipper was also in like manner annexed, and all three were arranged side by side, so as to be folded together, and a carbon interleaf inserted to impress the special matter, such as the name of the shipper, description of the articles, destination, etc., upon the other instruments; the whole being a patented form and arrangement of such instruments. The shipping order was signed by the shipper and retained by the company, and the original bill of lading was signed by the company, and, together with the copy or duplicate, which bore a copy of the company's signature, was given to the shipper. The company put upon each of the instruments, which, for distinction, we will now call the

Digitized by Google

original, a one-cent stamp, but put none upon the copy or duplicate. And the failure to do this is the cause of action. The case was tried by a court and a jury. Evidence was given to prove the above-stated manner of doing business as between the company and the shipper, which was not disputed, and there was also evidence that in some instances the shippers sent to their consignees the copy or duplicate of the bill of lading, instead of the original, and that the company recognized the same in making delivery; and a witness, who was an internal revenue agent, but had formerly been employed as an official in railroad business, testified, under objection of the plaintiff in that court, that, in his opinion, the copy was a duplicate bill of lading, and performed all the functions of the other. At the close of the testimony, counsel for the respective parties requested peremptory instructions to the jury to render a verdict in favor of their party. The court refused the instruction prayed by counsel for the defendant, and granted that prayed for the plaintiff. A verdict was rendered accordingly, and, judgment having been rendered thereon, this writ of error was sued out by the collector.

The statute under which it is sought to charge the company reads as follows:

"Express and Freight: It shall be the duty of every railroad or steamboat company, carrier, express company, or corporation, or person whose occupation is to act as such, to issue to the shipper or consignor, or his agent, or person from whom any goods are accepted for transportation, a bill of lading, manifest, or other evidence of receipt and forwarding for each shipment received for carriage and transportation, whether in bulk or in boxes, bales, packages, bundles, or not so inclosed or included; and there shall be duly attached and canceled, as in this act provided, to each of said bills of lading, manifests, or other memorandum, and to each duplicate thereof, a stamp of the value of one cent: provided, that but one bill of lading shall be required on bundles or packages of newspapers when inclosed in one general bundle at the time of shipment. Any failure to issue such bill of lading, manifest, or other memorandum, as herein provided, shall subject such railroad or steamboat company, carrier, express company, or corporation or person to a penalty of fifty dollars for each offense, and no such bill of lading, manifest, or other memorandum shall be used in evidence unless it shall be duly stamped as aforesaid." 30 Stat. 459 [U. S. Comp. St. 1901, p. 2304].

The decisive question in the controversy, and the one to which the argument of counsel has been mainly directed, is that of the construction to be given to the word "duplicate" in this paragraph. For the company it is insisted that, as here used, it means another original bill of lading—one having the same legal effect as the other original. The construction contended for in behalf of the government is that stated in an opinion given by the Commissioner of Internal Revenue, which is here transcribed:

"The act does not make it obligatory that the technical bill of lading should be issued in any case. * * * It is not a duplicate bill of lading that is referred to alone, but equally a duplicate manifest, duplicate memorandum, or a duplicate of any other instrument of writing which should contain evidence of receipt and forwarding. The question of tax turns upon the meaning of the word 'duplicate.' Webster's Dictionary, the accepted authority of this department in the definition of words, gives the following—the first being the ordinary meaning, and the second the technical meaning: 'Duplicate. (1) That which exactly resembles or corresponds to something else. Another: Correspondent to the first. (2) Law. An original instrument repeated. A

Digitized by Google

document which is the same as another in all essential particulars, and differing from a mere copy in having all the validity of an original.' It will be seen that the ordinary meaning of the word 'duplicate' is a copy, and it has been the rule of this office to construe words in statutes according to their ordinary meaning and acceptation, unless the intent of the statute imperatively requires that a technical significance should be given them. * * * I therefore rule that the word 'duplicate,' as used in the paragraph of Schedule A, 'Express and Freight,' includes all copies, and every copy of any instrument evidencing the receipt and forwarding of goods issued by the carrier or his agent must bear a one-cent stamp, and any memorandum made on the same, that it is 'merely a copy,' 'not a bill of lading,' 'not a duplicate,' 'not a contract,' 'not negotiable,' 'merely an acknowledgment,' etc., will have no effect to exempt the copy from taxation as a duplicate." Treasury Dec. Int. Rev. Dept. 1900, pp. 88, 89.

The opinion of the Circuit Court was in accord with the insistence of the company, apparently not accepting the ruling of the Commissioner of Internal Revenue as a correct interpretation of the statute. And with great respect for the opinion of the commissioner, we are notwithstanding constrained to think the ruling of the Circuit Court was right. We cannot help thinking that in the business world there is a plain distinction recognized between a duplicate and a copy, and that the former is understood to be one of two instruments, each of which is original, and intended to have the force of an obligation irrespective of the other, and that a copy is understood to be a transcript of an original; having the form, but not the essence, of an obligation. As the law is addressed to business men and business matters, we may well suppose that Congress intended the word to bear the meaning given it in the sphere of its operation. It is true that in a loose sense the word "duplicate" is sometimes used with the meaning of "copy," but that is only by a license quite common in the use of language. As a rule, the language of a statute is chosen with regard to its fitness for expression. The meaning of the word in legal phraseology is the same as that in its use among business men. It is tersely and correctly stated in 10 Am. & Eng. Encycl. of Law, 318, as follows: " 'Duplicate' is defined as a document which is the same in all respects as some other instrument, from which it is indistinguishable in its essence and operation." And many authorities are there cited in confirmation. A substantially like definition is given of the word in all the law dictionaries in common use. In Burrill's Dictionary, verbum "Duplicate," is given the following ample definition:

"A duplicate is sometimes defined to be a copy of a thing, but, though generally a copy, a duplicate differs from a mere copy, in having all the validity of an original. Nor, it seems, need it be an exact copy. Defined also to be the counterpart of an instrument; but in indentures there is a distinction between counterparts executed by the several parties, respectively, each party affixing his or her seal to only one counterpart, and duplicate originals, each executed by all the parties."

It is the privilege of contracting parties to determine what instrument shall be the repository of their agreement, and that another shall not be. If the original is lost, a copy is admissible in evidence, not because it imports the engagement, but to make proof of an original which did. In the case of duplicates, each is original evidence, and the loss of the other need not be shown. Totten v. Bucy, 57 Md. 450.

Digitized by Google

If these reasons and authorities were not sufficient, and the matter were still in doubt, we might refer to the rule applicable to this subject, that in such case the statute will be construed favorably to the taxpayer, "because it is fairly and justly presumable that the Legislature, which was unrestrained in its authority over the subject, has so shaped the law as, without ambiguity or doubt, to bring within it everything it was meant should be embraced." In United States v. Mullins, 119 Fed. 334, 56 C. C. A. 238, we applied this rule to another provision of the internal revenue laws, upon the sanction of numerous authorities there cited.

We do not think the reasons which lead to the conclusion already indicated are much affected by the circumstance that upon some occasions the company has recognized these so-called copies in making deliveries to the consignees. Undoubtedly they amounted to acknowledgments that bills of lading of the character recited had been issued, and the company might in some circumstances think it reasonable to waive the production of the actual bill of lading. We agree that if the transaction involved the use of duplicate bills of lading, or of instruments of equivalent legal character, though of slightly different language, the company could not escape the tax by protesting that the instrument was not in fact a bill of lading. And on the other hand, it must be admitted that the company had the right to adopt an otherwise lawful method of doing business, whereby it would not fall under the obligation to pay the tax on a duplicate. The question in every such case would be, what is the essential character of the instrument employed—is it a duplicate, or is it a copy?

Nor do we think the opinion of an expert is competent to determine the construction to be put upon such an instrument. It is for the court to construe it and define its character, and thereupon compare it with the statute.

The views which we have expressed lead to the conclusion that the judgment should be affirmed. It is so ordered.

(130 Fed. 847.)

PENNSYLVANIA R. CO. v. BURR et al.

(Circuit Court of Appeals, Second Circuit. April 5, 1904.)

No. 164.

1. SHIPPING—LIABILITY FOR DAMAGE TO CARGO—CONTRACT GIVING CARRIER BENEFIT OF INSURANCE.

A bill of lading provided that, in case of loss or injury of the goods, the damage should be adjusted on the basis of their value at the place and time of shipment, and that the carrier should have the benefit of any insurance effected by the shipper. He insured the goods for their value at the port of destination, but the policy contained a provision that in case of any agreement between the assured and any carrier whereby, in case of loss for which the carrier would be liable, he should have the benefit of the insurance, there should be no liability on the policy beyond the amount which was not recoverable from the carrier, and to make good the loss temporarily by advancing money pending delay in collecting from the carrier, which should not affect the final liability of the insurer. The goods were damaged in shipment, and the insurer advanced a sum to the owner; taking a receipt by which he agreed to prosecute his claim against

Digitized by Google

the carrier, and to refund to the insurer the amount collected. *Held*, that such advance was strictly within the terms of the policy, and did not constitute a payment of the loss, whereby the carrier could claim the benefit under the bill of lading as a set-off in an action by the owner to recover the damages.

2. SAME.

Where a bill of lading limited the liability of the carrier, in case of loss or damage, to the value of the goods at the time and place of shipment, a further provision that he should have the benefit of any insurance effected by the owner is valid only as to such insurance, or so much of the insurance as represents the goods, and the value for which, in case of loss, the carrier is liable; and he cannot claim the benefit of insurance covering the increased value of the goods at the port of destination, which the owner had the right to effect for his own protection.

In Error to the Circuit Court of the United States for the Southern District of New York.

This cause comes here upon writ of error to review a judgment of the Circuit Court, Southern District of New York, against plaintiff in error, who was defendant below. The judgment was entered upon a verdict directed by the court. The action was upon a bill of lading, to recover for injury to certain straw braid damaged by the carelessness of defendant during transportation from China to New York.

Henry G. Wood, for plaintiff in error.

Wilhelmus Mynderse, for defendants in error.

Before LACOMBE and TOWNSEND, Circuit Judges.

LACOMBE, Circuit Judge. The bill of lading contains the usual clause that in case of loss, either partial or total, damage shall be ascertained and adjusted on the basis of the cash value of the goods at the original port of shipment at the time of shipment, and the further clause:

"In case of loss or damage of any of the goods named in this bill of lading for which the [company] may be liable it is agreed and understood that it may have the benefit of any insurance effected by or on account of the said goods."

It was held in Phœnix Ins. Co. v. Erie Transportation Company, 117 U. S. 312, 6 Sup. Ct. 750, 29 L. Ed. 873, that such a clause is valid, and limits the right by way of subrogation of the insurer, upon paying to the assured the amount of a loss occasioned by the carrier's negligence, to recover over against the carrier.

The cash value at port of shipment was $9,569.30; the damaged value at New York was $4,820.44; verdict was directed for the difference, $4,748.86, with interest; and there is no dispute as to the correctness of the verdict, except that defendant claims the benefit of certain insurance. The sound value of the goods at New York was $11,537.20, and they were insured for that amount with the British & Foreign Marine Insurance Company. The amount due from the insurers to the insured was the difference between sound value and damaged value at New York, $6,716.76, and the sole question in the case is as to the effect of a certain clause in the policy, which reads as follows:

"In case any agreement be made or accepted by the assured with any carrier by which it is stipulated that such or any carrier shall have, in case of any

Digitized by Google

loss for which he may be liable, the benefit of this insurance, or exemption in any manner from responsibility grounded on the fact of this insurance, then and in that event the insurers shall be discharged of any liability for such loss hereunder, but this policy in these and all cases of loss or damage by perils insured against shall be liable and owe actual payment for (only) what cannot be collected from carrier * * * but also shall be chargeable with the direct pecuniary consequence to the assured temporarily arising from delay in collection from said carrier * * * and the advancing for this purpose only of funds to the assured for his protection pending such delay shall in no case be considered as affecting the question of the final liability of this insurance, and as soon as collection is made from the carrier the title of the insured to hold the funds so advanced by the insurer shall discontinue, and a portion thereof equal to the sum collected from the carrier shall be repaid to the insurer; but in case of final failure to collect from carrier, a portion of the sums advanced by the insurers equal to the sum short collected from the carrier may be retained and applied in settlement of the actual liability of this insurance thereby established (provided always the loss shall constitute in other respects a claim under this insurance)."

A somewhat similar clause was before the court in Inman v. South Carolina Ry. Co., 129 U. S. 128, 9 Sup. Ct. 249, 32 L. Ed. 612. The court said:

"By the terms [of the bill of lading] the plaintiffs were not compelled to insure for the benefit of the railroad company; but if they had insurance at the time of the loss, which they could make available to the carrier, or which, before bringing suit against the company, they had collected, without condition, then, if they had wrongfully refused to allow the carrier the benefit of the insurance, such a counterclaim might be sustained, but otherwise not. * * * Recovery upon neither of the policies could have been had except upon condition of resort over against the carrier, any act of the owners to defeat which operated to cancel the liability of the insurers. They could not, therefore, be made available for the benefit of the carrier. * * * Under the terms of these policies, payment itself would have been subject to such conditions as the companies chose to impose. * * * These insurers could require the owners to pursue the carrier in the first instance, and decline to indemnify them until the question and the measure of the latter's liability were determined."

Under this authority, unless the insurer has made an unconditional payment of the loss to the assured, the carrier cannot enforce any claim to benefit of the insurance.

On March 17, 1898, the insurance company gave to the plaintiffs $6,000, in receipt of the following agreement signed by them:

"In consideration of your advancing us the sum of $6,000 S. S. Belgic on the undermentioned goods we hereby agree to put forward a claim against the carrier in whose hands the same received damage and on receiving payment from them we undertake to refund you the same. It is further understood that you are to be responsible for all costs incurred in connection with the claim."

The defendant contends that this was really a payment of the loss under the policy, thus waiving the benefit of the clause, and reference is made to Roos v. Railroad Co., 199 Pa. 378, 49 Atl. 344. In that case an insurance company had insured $2,000 on property worth $4,200, and there had been a loss of $1,700. The amount of claim against the company was $809.50. That sum of money was turned over to the assured upon a written acknowledgment that it was "borrowed and received from the insurer, being a loan pending the investigation and determination whether the loss was one for which the carrier should

Digitized by Google

be held liable; * * * and if the carrier should be held liable, the undersigned agrees to return the amount thus loaned, when and to the same extent same shall be recovered from the carrier." The court held that it was properly left to the jury to determine whether this was a bona fide loan, or an adjustment of the loss, and a finding that it was not a bona fide loan was sustained. What operated upon the jury's mind in that case, we do not know, but it may be noted that the report contains no statement of what the policy contained. Whether or not there was any clause providing for a loan, does not appear. In the case at bar we have only two written documents, and no other evidence bearing upon their construction. The one provides for the making of a loan under certain contingencies, and the other indicates that such loan is made. Unless we are prepared to hold, as we most emphatically are not, that the clause in the policy providing for a loan under the conditions therein specified is void, we can reach no other conclusion than that the $6,000 was turned over to the assured as a loan, and not as an adjustment.

The defendant further contends that the verdict is excessive, because the defendant was entitled to the benefit of the excess of insurance, $11,537.20, over the cash value of the goods at the port of shipment, $9,569.10, which was the extent of its liability, viz., $1,967.90. The assured could, at the utmost, recover against the carrier $9,569.-10. To that extent only could the insurer be subrogated. But the assured would be entitled to recover $1,967.90 more from the insurer. That amount of insurance was good, and not discharged by any agreement with the carrier as to benefit of insurance. Therefore, as defendant contends, to that extent there was a payment of loss under the policy, and not a loan, and the carrier under bill of lading should have the benefit of it.

While technically the clause in the bill of lading may be open to such construction, we agree with plaintiff's counsel in the conclusion that, if it were thus construed, it would not, in the language of the opinion in Railroad Co. v. Lockwood, 11 Wall. 357, 21 L. Ed. 627, be "just and reasonable in the eye of the law," and would therefore be invalid. By refusing to respond in any event for more than the value at port of shipment, the carrier compelled the owner of the goods to take the risk of loss not only of all the profit he might have made, but also of freight and landing charges, and the value of all burdens and risks of the adventure. He seeks, as he is entitled to, to secure himself against such risk of loss by insuring his goods at their value here, with the additional items of increase included. In this way only can he secure complete reimbursement in case of loss. For example, in the case at bar, if he receives damaged value $4,820.44, carrier's liability $4,748.86, and insurer's liability $1,967.90, he gets back $11,537.20 —just sufficient to reimburse him the full value of the goods. In Inman v. South Carolina Railway, supra, the court held that, if a bill of lading contained a provision requiring the owners to insure for the carrier's benefit, such provision could not be sustained. When the carrier refuses to be itself liable for the destruction through its own negligence of part of the value of the goods it carries, it may fairly be held to have required a prudent owner to insure that part, and, if it be allowed it-

Digitized by Google

self to take the benefit of the insurance taken out on that part, the situation is the same as if it had required the insurance to be taken for its benefit. In our opinion, the clause in the bill of lading can only be sustained as to such insurance, or so much of the insurance, as represents the goods and the value for which in case of loss the carrier is to respond. If the assured is required to yield up to the carrier the insurance covering difference of value between port of shipment and port of discharge, the bill of lading by one clause "relieves the carrier from reimbursing the merchant for the full value of his goods, while an associated clause prevents the merchant from securing such reimbursement through the channels of insurance."

The judgment is affirmed.

(130 Fed. 851.)

ARMOUR PACKING CO. v. METROPOLITAN WATER CO.

(Circuit Court of Appeals, Third Circuit. June 27, 1904.)

No. 46.

1. MUNICIPAL CORPORATIONS—WATER FRANCHISE—ORDINANCES—CONTRACTS.
   A city ordinance granting a corporation a franchise to operate waterworks in the city on conditions specified, after having been accepted by the corporation, constitutes a contract between the corporation and the city.

2. SAME—CONSTRUCTION.
   Where a municipal ordinance granting a corporation a water franchise provided that the water rates to consumers should not exceed the rates given to the citizens of an adjoining city, to which the corporation also furnished water under a similar franchise, such provision should be construed to relate only to prices charged by such corporation, and did not include prices charged by such adjoining city after it had exercised its statutory right to purchase the corporation's water plant therein and operate the same as a municipal department.

In Error to the Circuit Court of the United States for the District of New Jersey.

The following is the opinion of the court below (Kirkpatrick, District Judge):

The plaintiff in this case is the Metropolitan Water Company, a corporation organized under the laws of the state of West Virginia, and the defendant is the Armour Packing Company, a corporation organized under the laws of the state of New Jersey, but carrying on its principal business in the cities of Kansas City, Kansas, and Kansas City, Missouri, which cities are contiguous, and separated from each other by the state line. On February 19, 1897, these parties entered into a contract which was to continue for a period of five years from March 1, 1897, by which the plaintiff agreed to furnish to defendant a supply of water of not less than fifteen million gallons nor more than twenty-five million gallons per month at the prices therein specified. It was provided in the contract that at any time after March 1, 1898 "either party shall have the right to this contract to take or furnish water by giving the other party one year's notice in advance from the date of giving such notice that said company, whichever it may be, desires to discontinue the same." On October 7, 1898, the defendant served a notice on the water company that "it elects to discontinue the contract of February 19, 1897, and elects to decline to take or pay for water furnished under said proposition, and hereby give to you the one year's notice in advance of its desire to discontinue the same, and said contract will stand discontinued, and water will no longer be taken nor need

Digitized by Google

be furnished thereunder from and after the seventh day of October, 1899." Notwithstanding said notice, the defendant continued to receive and the plaintiff continued to furnish the defendant with water after said date. This controversy relates to the price to be paid by defendant for the water so furnished. The first contention of the plaintiff is that the rate should be that fixed by the contract of February 19, 1897, because, although a notice was given of an intention to abrogate it, yet by entering into negotiations for its continuance and the acceptance of water after the time fixed for its termination, the defendant waived its notice of cancellation. It is true such negotiations were had, but no agreement was reached. So far as appears from the correspondence between the parties, not only was there no waiver of the notice to refuse to take under the contract, but a continual insistment on the part of the defendant upon the efficacy of the notice which had been given and upon its right to receive water after the termination of the contract at the rates prescribed by law. The rates fixed in the contract were special, and the defendant relinquished its right to receive them by its termination. The contract being ended, the defendant, as one of the inhabitants of Kansas City, was entitled to receive water upon the payment of the legal rates as fixed by the ordinances of the city regulating the same. The plaintiff was obliged, by its franchise, to furnish water to all the inhabitants of Kansas City upon payment of the legal rates therefor, and the right of the defendant to take and receive water was in no way dependent upon the contract, which merely fixed the price to be paid by it. So, the contract being terminated by the notice, the taking of the water under this general right could not be construed into a continuance of the contract. It cannot be said that in relinquishing its special privileges under the contract the defendant was precluded from obtaining water upon the same terms offered to the general public. In my opinion, the contract of February 19, 1897, was canceled by the notice of October 7, 1898.

The remaining question is, at what rate is plaintiff entitled to charge and defendant obliged to pay for the water furnished since its expiration? This question of price is regulated by the ordinances of the city. Ordinance No. 2,131 relates to that part of Kansas City, Kansas, in which defendant's plant is located, and established the rates to be charged to consumers. It is insisted, however, that the rate fixed in this ordinance does not apply, because appended to the ordinance is note 3, which is as follows: "It is also agreed that if any less rate is given to Kansas City, Missouri, during the continuance of this franchise the same schedule of rates shall apply under this ordinance, and any other benefits given to Kansas City, Missouri, shall apply both to public and private consumers." In order to properly ascertain the intention of the parties when entering into this contract, it will be necessary to consider their relation to each other before and at the time the ordinance went into effect. The National Waterworks Company was organized about the year 1874 for the purpose of supplying Kansas City, Missouri, with water, and obtained from its authorities the franchise of laying its pipes in the public streets of that city. Afterwards, about 1881, it obtained a like grant for a like purpose from Kansas City, Kansas. Water was being furnished to the towns of Wyandotte and Armourdale, adjoining Kansas City, Kansas, by a separate company, which, upon the consolidation of Wyandotte and Armourdale with Kansas City, Kansas, into one municipality, was subsequently merged into the National Waterworks Company, so that in 1891, when Ordinance 2,131, as above, was approved, the National Waterworks Company was furnishing water to Kansas City, Missouri, and Kansas City, Kansas, which latter comprised old Kansas City, Kansas, and the towns of Wyandotte and Armourdale. Inasmuch as the two cities of Kansas City were contiguous, separated only by the state line, it was deemed advisable that the citizens of each should enjoy equal benefits in regard to the rates required to be paid for water furnished by this company which supplied it to both. So long as the National Waterworks Company controlled the plants in both cities, the rates were uniform, and so continued until January 15, 1898, when Ordinance No. 10,951 was passed by the authorities of Kansas City, Missouri, establishing a lower rate for that city. It appears that in the year 1895 the city of Kansas City, Missouri, purchased of the National Waterworks Company the waterworks of said company located in their city, and the National Company sold its works in Kansas City, Kan-

Digitized by Google

sas, to the plaintiff company. So far as Kansas City, Missouri, was concerned, the National Waterworks Company ceased to do business and no longer was in a position to furnish rates to Kansas City, Missouri, either to the public or to private consumers. The rates in that city were fixed by itself, and while the waterworks company might have agreed that it would charge to Kansas City, Kansas, the same rates which might be charged in Kansas City, Missouri, the contract will not bear that interpretation. In my opinion, the water company was stipulating for the acts which it would perform. It was the owner of both plants, and the true meaning of the note 3 was that, if a less rate than that named in the ordinance were given by it (that is to say, the water company) to Kansas City, Missouri, the same schedule of rates should apply (that is to say, be given by it) to Kansas City, Kansas. It will be observed that it is also provided in the contract that "any other benefits given to Kansas City, Missouri, shall apply also to public and private consumers" in Kansas City, Kansas. Certainly this must have been intended to apply to benefits given by the water company. The object of the ordinances was to produce uniformity. Equal rates were fixed in both cities, and, while the plaintiff company was left free to reduce its rates in either city, yet it could not reduce in one city without at the same time conferring equal benefits upon the other. There is nothing in the agreed case tending to show that a change of ownership or a separation of the plants was in contemplation at the time the contract was made. It was not intended that the National Water Company should surrender its franchise, or permit a stranger to change its rates at will and without its consent. The agreement (note 3) cannot be made to apply to the changed condition, and when the National Waterworks Company ceased to supply water to both cities the obligation to supply water at a uniform rate ceased. The conclusion is that the plaintiff is entitled to recover from the defendant the price fixed for water by the Ordinance 2,131 of Kansas City, Kansas, without reference to the rate fixed by the municipality of Kansas City, Missouri. In computing the amount due, allowance must be made for whatever sums have been paid to the plaintiff on account, as agreed upon in the state of the case.

Frank H. Platt, for plaintiff in error.

James E. Howell, for defendant in error.

Before ACHESON, DALLAS, and GRAY, Circuit Judges.

ACHESON, Circuit Judge. This was an action brought by the Metropolitan Water Company against the Armour Packing Company to recover the price of water furnished by the plaintiff to the defendant at Kansas City, in the state of Kansas, less such sums as admittedly had been paid thereon. The controversy between the parties concerns the price which the defendant is bound to pay for the water so furnished; and the question in dispute arises upon an ordinance (No. 2,131) of the city of Kansas City, Kan., passed in council on December 4, 1891. The parties differ as to the meaning and effect of that ordinance. For the proper understanding of the question in dispute certain facts must be stated.

Kansas City in the state of Kansas and Kansas City in the state of Missouri adjoin each other, the state line separating the two cities. In the year 1874 the National Waterworks Company received from Kansas City, Mo., a franchise to lay its pipes in the public streets of that city for the purpose of supplying the city and its inhabitants with water; and thereafter, and until the year 1895, that company owned, maintained, and operated under said franchise a waterworks system in Kansas City, Mo., supplying that city and its inhabitants with water. On November 29, 1891, by Ordinance No. 173, Kansas City,

Digitized by Google

Kan., granted to the National Waterworks Company a franchise to supply water to that city and its inhabitants and other consumers therein for a period of 10 years. The eighth section of this ordinance (No. 173) reads thus:

"Sec. 8. The water rates to consumers shall not exceed the rates paid by the citizens of Kansas City, Missouri, at any time, and shall be paid for such time as the grantee may deem best for both parties."

Adjoining Kansas City, Kan., in 1881, were two municipalities known as "Wyandotte" and "Armourdale." Waterworks were erected for the purpose of supplying these municipalities with water, and the franchises therefor were combined in 1885 in the Wyandotte-Armourdale Water Company. In that year the National Waterworks Company acquired all the stock and bonds of the Wyandotte-Armourdale Water Company, and changed its name to Kansas City Water Company. Afterwards, by virtue of its ownership of all the stock and bonds of that company, the National Waterworks Company furnished water to Wyandotte and Armourdale. By 1891, old Kansas City in the state of Kansas and Wyandotte and Armourdale were consolidated into one municipal corporation under the name of Kansas City, Kan. On December 4, 1891, the city of Kansas City, Kan., passed two ordinances in the same terms (No. 2,130 and No. 2,131). Ordinance No. 2,130 relates to the franchises originally given to water companies to supply water to that part of Kansas City, Kan., which was formerly Wyandotte and Armourdale, and that ordinance applies to that section of the city. Ordinance No. 2,131 relates to the franchise granted by Ordinance No. 173, above mentioned, to the National Waterworks Company, and applies to that part of Kansas City, Kan., in which the packing house of the defendant below is located, and where the water in question was furnished to the defendant. As already stated, it is out of Ordinance No. 2,131 that this controversy has arisen. This ordinance enacts:

"Section 1. That Ordinance No. 173 of the former city of Kansas, state of Kansas, being an ordinance entitled, 'An ordinance to provide a supply of water for the inhabitants of the city of Kansas, state of Kansas,' approved Nov. 29, 1881, be and the same is hereby ordained an ordinance of the city of Kansas City, and that all rights, privileges and franchises therein granted are hereby granted unto the said the National Water Works Company of New York, and its successors and assigns, for the term of fifteen years from and after the passage, approval, acceptance and publication of this ordinance, under the conditions and restrictions named in said ordinance, No. 173, and under the further conditions that from and after the publication of this ordinance and during the continuance of said franchise, the compensation for each hydrant now located or that may be located hereafter by the said city of Kansas City, shall be at the rate of fifty ($50) dollars per annum from and after January 1st, 1892, and the said city hereby agrees to pay such sum for such rental semi-annually in January and July of each year. The water rates to consumers during the continuance of this franchise shall be as per following schedule."

Here follows a schedule of water rates to consumers. Then, in note 3, this ordinance contains the following stipulation:

"It is also agreed that if any less rate is given to Kansas City, Missouri, during the continuance of this franchise, the same schedule of rates shall apply under this ordinance and any other benefits given Kansas City, Missouri, shall also apply both to public and private consumers."

Digitized by Google

In 1895 the city of Kansas City, Mo., in the exercise of a statutory right, purchased the waterworks and water system of the National Waterworks Company located in Missouri, and has since maintained and operated the same. On December 6, 1898, the city of Kansas City, Mo., passed an ordinance (No. 10,951) fixing the water rates to be charged by that city for water furnished by that city to consumers, which ordinance has since been in force. In 1895 the National Waterworks Company caused the Metropolitan Water Company, the plaintiff, to be organized, and caused all the waterworks properties and franchises in Kansas City, Kan., to be transferred to that company. The Armour Packing Company claims here, as it did in the court below, that Ordinance No. 10,951 of Kansas City, Mo., passed on December 6, 1898, fixes the rate at which it may take water from the plaintiff in Kansas City, Kan., and this by reason of the provisions of Ordinance No. 2,131 of the latter named city. The court below, however, declined to adopt this view. The court was of opinion that in and by note 3 of Ordinance 2,131 of Kansas City, Kan., the National Waterworks Company stipulated only for its own acts, and what the stipulation meant was that, if the water company gave to Kansas City, Mo., lower rates than those specified in Ordinance No. 2,131, then the water company should give the same reduced rates to Kansas City, Kan. The court therefore held that the rates which Kansas City, Mo., by its ordinance of December 6, 1898, fixed for the consumers of water in that city, did not bind the plaintiff in respect to water furnished by it to consumers in Kansas City, Kan., under its franchise granted by that city by Ordinance No. 2,131. Accordingly, upon the agreed statement of facts the court gave judgment in favor of the plaintiff in the sum of $8,542.30.

The question we are called on to determine upon this writ of error is whether the court below rightly construed Ordinance No. 2,131. That ordinance, having been duly accepted by the National Waterworks Company, became a contract between the water company and the city of Kansas City, Kan. It therefore, like other contracts, is to be interpreted—if the meaning be in any respect doubtful—with reference to the circumstances surrounding the parties at the time it was made. Canal Company v. Hill, 15 Wall. 94, 21 L. Ed. 64; Merriam v. United States, 107 U. S. 437, 2 Sup. Ct. 536, 27 L. Ed. 530. Now, at the time of the passage and acceptance of Ordinance No. 2,131, the National Waterworks Company was the owner of the waterworks in Kansas City, Mo., and was supplying that city with water. It was natural and reasonable that the grant of the water franchise to that company by Kansas City, Kan., should provide that the water company should not exact from that city greater water rates than it should give to Kansas City, Mo. Note 3 of the ordinance employs apt language to effectuate such purpose. The parties to the contract which is embodied in Ordinance No. 2,131 were fixing water rates as between themselves. It may therefore well be supposed that they contracted with reference to the then existing state of affairs—with respect to the fact that the grantee of the franchise conferred by Ordinance No. 2,131 owned the waterworks and system in Kansas City, Mo., and was furnishing water to that city and its inhabitants under a franchise granted by that city.

Digitized by Google

It does not appear that any change in water service was then in contemplation. Kansas City, Mo., indeed, had a statutory right to purchase the waterworks in that city at the expiration of the then current term of the water franchise, if the grant thereof was not renewed. But such acquisition by the city was not impending at the time of the passage of Ordinance No. 2,131. If it had been the intention of the parties that water rates to consumers in Kansas City, Kan., should not exceed the rates which Kansas City, Mo., might establish for consumers in that city, different language would have been used from that contained in note 3. We think, with the court below, that the words, "if any less rate is given to Kansas City, Missouri, during the continuance of this franchise, the same schedule of rates shall apply under this ordinance, and any other benefits given Kansas City, Missouri, shall also apply both to public and private consumers," are fairly referable to the acts of the National Waterworks Company —to rates and benefits given by that company.

We are not able to accept the view suggested by counsel for the plaintiff in error that section 8 of the old ordinance No. 173 is to be treated as still in force, and be read into Ordinance No. 2,131 by virtue of the general language of section 1 of the latter ordinance. Ordinance No. 173 did not fix any schedule of water rates to consumers, and section 8 was intended as a limitation upon the rates which the water company might charge consumers. But Ordinance No. 2,131 fixes the water rates to consumers by a schedule of rates set out in the ordinance, subject to the single exception expressed in note 3. The provision of Ordinance No. 173 in respect to rates was not continued, but was superseded, by the express provisions of Ordinance No. 2,131.

We are of opinion that the conclusion which the court below reached is in accordance with the true meaning of Ordinance No. 2,131, and accordingly the judgment is affirmed.

(130 Fed. 856.)

THE COL. JOHN F. GAYNOR.

(Circuit Court of Appeals, Third Circuit. July 7, 1904.)

No. 34.

1. COLLISION—VESSEL AT QUARANTINE STATION—DUTY OF PASSING VESSELS.

   A steamship, which has stopped her machinery, while lying at a quarantine station, where it is not customary to anchor, and is moving only slightly with the tide and without headway, has to a large extent the rights of a vessel at rest as regards other vessels that are passing.

2. SAME—STEAMER AT REST—PASSING TUG WITH TOW.

   An incoming British steamship in charge of a licensed pilot stopped in the daytime off the quarantine station in the Delaware river, at the usual place, which was not more than two lengths from the pier on the western side, to undergo the customary medical inspection. She did not anchor, and it was not customary to do so. While so lying, with the quarantine flag up, and while the inspection was being made, a tug came down the river with two heavily laden scows, without rudders, in tow on a line which made the tow from 1,400 to 1,600 feet long. Each vessel saw the other when a mile distant, and the tug understood the position of the

Digitized by Google

steamship and the purpose for which she had stopped. The tug was properly on the westerly side of the channel, but there was ample room for her to pass to the eastward, so as to avoid any danger of collision. She had no lookout on the stern to keep watch of the tow, and passed so close to the steamship that both of the scows, sheering as she turned from the straight course, struck the steamship, and injured her. *Held*, that the steamship was entitled, under the circumstances, to the rights of a vessel at anchor, and that the tug was solely in fault in failing to keep at a safe distance in passing

Appeal from the District Court of the United States for the Eastern District of Pennsylvania.

For opinion below see 115 Fed. 382.

See 124 Fed 743.

La Roy S. Gove, for appellant.

J. Parker Kirlin, for appellee.

Before ACHESON, DALLAS, and GRAY, Circuit Judges.

GRAY, Circuit Judge. This is an appeal from the decree of the District Court for the Eastern District of Pennsylvania, in admiralty The findings of fact, as contained in the opinion of the learned judge of the court below, are as follows:

"McPherson, J. This is an action brought to recover damages for a collision that took place about 3 o'clock in the afternoon of June 16, 1899, between the tug John F. Gaynor and the British steamship Vedra, in which the steamship was injured. The Vedra was on her way from London to Philadelphia in ballast, drawing about ten feet of water, and was proceeding up the Delaware river in charge of a duly licensed pilot. She is a tank vessel, built of steel, 2,622 tons net register, 435 feet long, 45 feet beam, and was properly manned and equipped.

"As she approached the Reedy Island quarantine station, which is upon a pier running parallel with and close to the western edge of the channel, the quarantine flag was hoisted upon her foremast, her engines were stopped and by the time she came nearly abreast of the station her way had practically ceased, so that she was merely being borne slowly up the river by the tide, which was then nearly flood. She did not anchor, but the testimony shows clearly that it is not customary for vessels to anchor while the medical examination is going on. A government boat put out from the station carrying a physician, and the examination was begun. While it was going on, the tug came down the river, towing two square-bowed scows tandem, each being heavily loaded with stone and drawing 12 or 13 feet of water. The total length of the tow was from 1,400 to 1,600 feet, each scow being 30 or 40 feet wide and about 150 or 160 feet long and having no rudder or independent means of propulsion.

"The day was clear, and the wind was blowing briskly from about northwest. Each vessel saw the other more than a mile away, and understood the other's character and situation. The tug did not expect the steamship to anchor, but knew that she was lying at rest upon the water, undergoing, or about to undergo, examination by the quarantine physician. The boiler of the tug was not in very good condition so that she was not able to exert her full power, but she was proceeding down the river against the tide at a speed of 3 or 4 knots an hour. At the time she saw the steamship, the tug was on the westward side of the channel, and, under ordinary circumstances, it was proper that she should be where she was. But, when she saw the steamship at rest upon the water with the quarantine flag flying, and knew that she was obliged to interrupt her voyage until the examination should be completed, it became the duty of the tug, as the moving vessel, to take every reasonable precaution to keep out of the way. There was ample room and depth of water for the tug to pass so far from the steamship that no collision could have possibly

Digitized by Google

taken place. The channel was wide at this point, and there were no vessels near enough to offer any obstruction. The tug, however, kept her course so closely that when she approached the steamship it was evident that she would be obliged to pass within a few feet. She herself managed to get by in safety, but the first scow sheered toward the steamship and broke one of the blades of the screw, and the second scow sheered more decidedly and with her forward starboard corner struck the ship a severe blow on the starboard bow, doing a good deal of damage.

"It is argued on behalf of the tug, that the steamship was at fault, because she did not anchor, because she was too far out in the channel, and because it is averred that she made certain movements with her engines that put the ship into a more dangerous position than she would have otherwise occupied. It is also argued that she did not keep a proper lookout, and therefore did not see the tug in time to move out of the way. In my opinion none of these charges is well founded.

"The pilot and second officer were on the bridge, other officers and men were on the deck, and the tug was seen more than a mile away. The steamship stopped in the customary place, and was not, I think, more than 500 or 600 feet from the station. She was not obliged to anchor in the absence of special circumstances indicating that to be her duty. I am also of opinion that her engines were not put into motion at all while she was undergoing examination. An order to go ahead was undoubtedly given, but it was countermanded immediately, and was not carried into effect. No signals were given by either vessel, and none was required. I see no reason, therefore, to charge the steamship with any fault. As it seems to me, the collision is properly chargeable to the tug, for approaching too close to the ship with so unwieldy a tow. It is well known that scows of this description are very apt to sheer, as they have no rudder, or other means of guidance than the tug itself, and as these were being towed on a very long hawser, the danger of sheering was increased. The tug was bound to take note of the position of the ship and the business upon which she was engaged, and to pass far enough to the eastward to avoid the danger of collision. Apparently, she either miscalculated the distance or put off the effort to take the tow to the eastward until it was too late."

From a careful examination of the testimony sent up to us in the record of this case, we are of opinion that the learned district judge was right in his findings of fact, and in the conclusions founded upon them.

Counsel for the appellant contends, with much force and ingenuity, that the tug was not in fault in her navigation, and that the steamship was solely in fault for the collision. The court below has found as a fact, that the Vedra was coming up the river in charge of a competent and licensed pilot, and that, at the lower end of Reedy Island, she hoisted a quarantine flag, and stopped, as under the circumstances she was bound to stop, to be boarded by a quarantine physician from the station at the upper end of the island. The island is something less than a mile in length, running nearly parallel with the center line of the channel, the course of which up the river would be north 14 degrees east. Necessarily, she ran to the westward side of the channel, to accommodate the boarding officer, and after her engine stopped and the physician was on board, her headway and the flood tide carried her up abreast of the quarantine station, and about 800 feet or two ship lengths away. The pilot and second officer were upon the bridge, and during all the time covered by the events detailed in the record, the captain was mustering the other officers and crew, for examination by the physician. The tug with her tow was coming down to the westward of the middle of the channel, as, under ordinary circumstances, she was entitled to do, and the steamship was in full

Digitized by Google

view of those on board the tug for more than a mile above the quarantine. The engines of the steamship, from the time they stopped at the lower end of the island, were not in motion, until just before the collision, when they were started ahead, in consequence of the impending peril of a collision with the barge, but were immediately stopped by the pilot, to avoid cutting the barge with the propeller The steamship was practically in the situation of a motionless ship moving only with the drift of the tide, without steerageway. The purposes for which she had stopped, were perfectly understood by the pilot and all others on board the tug.

The court was right in its statement, that under ordinary circumstances, the tug and tow should be where they were, that is, on the westward side of the channel. But the "ordinary circumstances," to which the learned judge alludes, would be where the steamer was under way, coming up the channel. In such a case, the steamer would presumably have passed on the port side, or to the eastward of the tow, and the tug would have probably borne a little more to the westward, to insure a safe passage. But these were not the circumstances of the case before us. The steamship was not under way, but had stopped for a proper purpose, well understood by those in charge of the tug, and though not exactly in the situation of a ship at anchor, had, to a large extent, the rights of a ship at rest, in regard to the movements of a passing vessel. The head of the steamer was always veered a little toward the westward of the channel, and it was perfectly apparent to the tug that it must pass to the eastward of the steamship. That this was in fact understood to be its duty by the tug, is evidenced by the fact that no attempt was made to do otherwise than pass to the eastward of the steamer, while practically at rest off the quarantine station. There was ample room in the channel eastward of the steamer, at least a half mile of water navigable for the tug and her tow.

The fault, it seems to us, as it seemed to the court below, was that, in passing to the eastward, those navigating the tug did not go far enough to allow for the sheering of the two barges, the towlines of which were, in the aggregate, 800 or 900 feet long, and the testimony shows that with towlines of such length, the sheering takes a very wide range. The barges were square at the ends, and were without rudders, so that, when the tug changed its course, to itself avoid the steamer, it was natural to expect that the barges would not be straightened out in the wake of the steamer for some appreciable time, and that the tendency to sheer would be augmented by the changed course of the tug. These conditions, those navigating the tug were bound to recognize and to exercise the degree of care and caution in passing the steamer made necessary thereby.

That a tug with such a tow is properly called an incumbered vessel, is most true, and, in a narrow channel, and when meeting steam vessels under way, is entitled to a consideration and indulgence often recognized by the courts. But, on the facts presented by this record, the tug is entitled to no such indulgence. The channel above and below the point of collision was wide, the course running straight past the quarantine and parallel with the island for a distance of between

Digitized by Google

four and five miles. The incumbrance of the tow, and the difficulty and danger ensuing therefrom, in passing any object at rest, must, as we have said, be recognized by those in charge of the tow, and in proportion to the danger and difficulty is the measure of duty imposed to avoid it. We repeat that, under the circumstances of this case, the Vedra was entitled to the privileges and rights of a vessel at rest. She was well over on the western side of the channel, was not under steerageway, and the pilot of the tug understood that it was his duty to pass to the eastward, and as ample room for that purpose existed in that direction, the responsibility of making a safe clearance of the vessel not under way, rested on the tug.

We do not find the contention of appellant, that the force of the wind and tide together had drifted the steamer so far to the eastward as to have contributed to the collision, to be supported by the evidence. The wind was northwest and light, and the pilot had kept the steamer's head well into the wind. But even if the steamer had, from the effect of the wind or the tide, or both, been carried, while not under way, toward the tow, such fact must have been apparent to the tug, and upon her rested the responsibility of taking that drift into the account. A steamer that is stopped, so far as her machinery is concerned, has, when her steerageway is gone, under such circumstances as these, the rights of a vessel at rest, as regards other vessels that are passing.

A matter in evidence, which should not be overlooked, is that there was no lookout on the stern of the tug to observe the situation of the barges in tow. Such a lookout, as the tug was approaching the steamer, might have given timely notice to the pilot of the danger threatened by the sheering of the tow, so that it could have been avoided by proper caution on his part.

We think the decree of the court below should be affirmed, and it is so ordered.

(130 Fed. 860.)

PORTLAND FLOURING MILLS CO. v. BRITISH & FOREIGN MARINE INS. CO., Limited.

(Circuit Court of Appeals, Ninth Circuit. May 31, 1904.)

No. 998.

1. EVIDENCE—CONTRADICTING WRITTEN CONTRACT—PROOF OF CUSTOM.
   Proof of a custom of doing business between the parties is not admissible to contradict or vary the contract made by a bill of lading, which is plain and unambiguous in its terms.

2. SHIPPING—CONTRACT OF AFFREIGHTMENT—LIABILITY FOR FREIGHT.
   A provision in a bill of lading that the freight shall be "considered as earned, steamer or goods lost or not lost at any stage of the entire transit," is valid and enforceable.

3. SALE—PASSING OF TITLE—DRAFT ATTACHED TO BILL OF LADING.
   Where goods are shipped by a vendor to a vendee, the vendor taking a bill of lading in which he is named both as consignor and consignee, which bill is indorsed in blank and attached to a draft on the vendee

---

¶ 3. See Sales, vol. 43, Cent. Dig. § 547.

Digitized by Google

for the purchase price, the title to the goods does not pass to the vendee until payment of the draft.

4. SHIPPING—LIABILITY OF CONSIGNOR FOR FREIGHT.

The rule is that the consignor of goods is primarily liable for the payment of the freight, as the party making the contract, regardless of whether or not he is the owner of the goods, or whether the freight is secured by lien.

5. SAME.

Respondent shipped a cargo of flour, consigned to its own order under bills of lading providing that freight should be deemed earned, vessel or cargo lost or not lost. The flour was shipped under contracts of sale, and was insured by respondent in its own name for sufficient to cover the invoice price and freight. Respondent then indorsed the bills of lading and policies in blank, and attached them to drafts drawn on the purchasers for the selling price and cost of insurance, which were forwarded for collection. *Held*, the vessel having been lost, that respondent was liable for the freight, whether its interest in the cargo was that of owner, or whether it merely retained a lien, since in either case the purchasers were to have possession only on payment of the drafts.

6. SAME—DEFENSES.

Where a cargo was insured by the shipper for sufficient to cover its value and the freight, the fact that on the wrecking of the vessel the cargo was surrendered by the master to the insurer without notice to the shipper did not prejudice him, and constituted no defense to an action to collect the freight under the terms of the bills of lading.

Appeal from the District Court of the United States for the District of Oregon.

Appellant is engaged in the manufacture and sale of flour, having its principal office at Portland, Or., and a branch office at Hong Kong, China. It appears that the flour shipped to Hong Kong by appellant is handled by a Chinese syndicate; that the sales made are confined to the company's agent at Hong Kong, through whom the orders are made; that the members of the syndicate receive the flour in certain definite proportions, designated by shares —one firm having three shares, another two, and the third one; that on August 29, 1901, appellant received from its Hong Kong agent a cable confirmation of a contract for an amount of flour to be intended for the members of the syndicate, with a request that the order be confirmed, which was done, according to the shares of each. In December, 1901, appellant shipped with the Portland & Asiatic Steamship Company, for carriage on the Knight Companion, a British vessel operated by said company, a large quantity of flour. One lot, intended for Cornes & Co., was billed to Kobe, Japan, and the others, intended for different purchasers, were billed to Hong Kong, China. The goods in each case were shipped under a bill of lading issued by the carrier, wherein it was stipulated that the flour shipped was to be delivered "at the vessel's tackle unto the Portland Flouring Mills Company, or to his or their assigns. Freight on same as per margin to be collected in U. S. gold coin or its equivalent. The several freight and primages to be considered as earned, steamer or goods lost or not lost at any stage of the entire transit." On the margin of the bills of lading were the letters "N'fy" or "Notify," followed by the name of the firm on whose account the shipment is alleged to have been made. These bills of lading were in each case accepted by appellant, who was therein named both as consignor and consignee. Policies of insurance in the name of appellant were taken out at the invoice price and 40 per cent., which included freight, and drafts drawn at 60 days' sight on the members of the syndicate in the proportion of their shares for the selling price of the flour plus cost of insurance. These policies, one for each member of the syndicate, although in the name of appellant, and the several bills of lading, were indorsed in blank, so that they were available to the holder. The drafts, with the policies and bills of lading, so indorsed, were delivered to Ladd & Tilton, bankers of appellant, and the amount placed to the latter's credit.

The steamship Knight Companion left Portland, Or., on the 31st day of

Digitized by Google

December, 1901, and reached the coast of Japan, and was there stranded on the 2d day of February, 1902, and abandoned as a total loss by the steamship company and the several insurance companies interested. One of these insurance companies was the appellee, which had insured the steamship company for the freight to be earned by the voyage. Appellee settled with the steamship company, paying its claim in full, and the other insurance companies settled with the holders of their policies, and the insurance companies thereupon divided among themselves certain moneys secured from the salvage of the cargo; the insurers of appellant's shipment receiving 45,205 yen, approximately $22,500. Appellant's insurers paid the face of their policies, which exceeded the selling price of appellant's goods. On the payment of the steamship company's claims in full for freight, appellee became subrogated to the steamship company's rights, and in addition thereto took from the steamship company an assignment of its claim for the freight, and brought this libel in personam for the recovery of the same. The court rendered a decree in favor of appellee (124 Fed. 855), and from that decree the appeal herein is taken.

C. E. S. Wood, S. B. Linthicum, J. C. Flanders, and Williams, Wood & Linthicum, for appellant.

Page, McCutchen & Knight and Snow & McCamant, for appellee.

Before GILBERT and ROSS, Circuit Judges, and HAWLEY, District Judge.

HAWLEY, District Judge, after making the foregoing statement, delivered the opinion of the court.

The contention of appellant is that the bills of lading and the practice between the parties in their previous business relations of a similar character show that the steamship company had always collected from the purchasers of the flour, that the bills of lading constitute a consignment to order, that the person or firm who is to receive the freight at its destination is indicated by the person who is named to be notified, and that the understanding and intention of the parties were, at the time the bill was given, that the freight should be collected from the person receiving the goods. Appellant's counsel in their brief say:

"Our contention is that it was well known by the Portland & Asiatic Steamship Company in this particular case, and by some years of customary traffic between the parties, that the flour was sold to the consignees f. o. b. at Portland, and in making delivery to the steamer and receiving the bill of lading the shipper, so far as all carriage of the goods was concerned, was acting only as the agent and representative of the purchasers' consignees."

The contention of the appellee is that the bills of lading upon their face clearly show that appellant was the owner and consignee, as well as the consignor, of the flour, and that these facts necessarily make it responsible for the freight. We are of opinion that, whatever the customs, usages, and understanding between the parties may have been in their previous transactions, where the goods were delivered and the payment of the freight thereon made by the parties who received the goods, it cannot have any controlling effect in the present case, where the goods were not delivered. The testimony as to the usages and customs in the shipping of the flour was all received subject to the objections urged by appellee as to its sufficiency and relevancy, in this: that each bill of lading constituted a contract between the parties, and could not be impeached or contradicted by parol evidence. The general rule upon this subject is well stated by Story, J., in The Reeside,

Digitized by Google

2 Sumn. 567, Fed. Cas. No. 11,657 (where numerous authorities upon the point are cited), as follows:

"The true and appropriate office of a usage or custom is to interpret the otherwise indeterminate intentions of parties, and to ascertain the nature and extent of their contracts, arising, not from express stipulations, but from mere implications and presumptions, and acts of a doubtful or equivocal character. It may also be admitted to ascertain the true meaning of a particular word, or of particular words, in a given instrument, when the word or words have various senses, some common, some qualified, and some technical, according to the subject-matter to which they are applied. But I apprehend that it can never be proper to resort to any usage or custom to control or vary the positive stipulations in a written contract, and, a fortiori, not in order to contradict them. An express contract of the parties is always admissible to supersede, or vary, or control a usage or custom; for the latter may always be waived at the will of the parties. But a written and express contract cannot be controlled, or varied, or contradicted by a usage or custom; for that would not only be to admit parol evidence to control, vary, or contradict written contracts, but it would be to allow mere presumptions and implications, properly arising in the absence of any positive expressions of intention, to control, vary, or contradict the most formal and deliberate written declarations of the parties."

In The Delaware, 14 Wall. 579, 603, 20 L. Ed. 779, the court said:

"Such evidence may be introduced to explain what is ambiguous, but it is never admissible to vary or contradict what is plain."

In the present case the intention of the parties was clearly expressed in the bill of lading. There was nothing of an equivocal or ambiguous character contained therein, and there were no words used which required any ora. testimony as to their true meaning. In all such cases it is manifest that "the rights of the parties are fixed by the bill of lading, and the evidence of conversations prior to the date of it cannot have any effect to vary its provisions." O'Rourke v 221 Tons of Coal (D. C.) 1 Fed. 619, 624. "The carrying contract, reduced to writing in a bill of lading, can no more be altered or varied by parol evidence than any other written contract." The Golden Rule (C. C.) 9 Fed. 334. "Such a contract is to be construed, like all other written contracts, according to the legal import of its terms. It becomes the sole evidence of the undertaking, and all outstanding agreements are extinguished by the writing." Louisville, E. & St. L F. Co. v. Wilson (Ind. Sup.) 21 N. E. 343, 4 L. R. A. 244. See, also, Galveston, etc., R. Co. v. Silegman (Tex. Civ. App.) 23 S. W. 299.

The contract as made between the parties is a valid one, that can be enforced. It is true, as claimed by appellant, that, where there is no specific agreement to the contrary, freight is not deemed earned until the voyage is completed, and the goods are delivered or ready to be delivered at the point of destination. But this principle has no application whatever to a case like the present, where it is expressly provided:

"The several freight and primages to be considered as earned, steamer or goods lost or not lost at any stage of the entire transit."

The true rule in regard to contracts of this character was thus expressed by Lord Ellenborough, C. J., in 1815, in De Silvale v. Kendall, 4 M. & S. 37, 42:

"By the policy of the law of England freight and wages, strictly so called, do not become due until the voyage has been performed. But it is competent

Digitized by Google

to the parties to a charter party to covenant by express stipulations in such manner as to control the general operation of law. The question in this case is whether the parties have not so covenanted by the stipulations of this charter party. If the charter party be silent, the law will demand a performance of the voyage; for no freight can be due until the voyage be completed. But if the parties have chosen to stipulate by express words, or by words not express, but sufficiently intelligible to that end, that a part of the freight (using the word 'freight') should be paid by anticipation, which should not depend upon the performance of the voyage, may they not so stipulate? * * * And there can be no doubt that the payment of freight may by the agreement of the parties be so exempted."

In 7 Am. & Eng. Enc. of Law, 246, it is said:

"It is competent for the parties to a contract of affreightment to stipulate expressly that the freight, or a part thereof, shall be payable absolutely at the time of the shipment of the cargo, or at a certain time thereafter, without regard to performance of the contract."

It is argued by appellant that there is no explanation of the words of the bill of lading, "Freight to be collected in U. S. gold coin or its equivalent, payable at Hong Kong, China," and "Notify Wing Chong Lee," that is consistent with the language of the bill of lading, except that the carrier had agreed to collect its freight from Wing Chong Lee at Hong Kong. But the record shows that appellant transacted business at Hong Kong, as well as at Portland, and this may have been the reason for inserting the provision as to the place of payment of freight. We do not, however, consider it important to ascertain the reasons why such stipulations were embodied in the contract. It is enough to say that the contract as made is valid and of binding force. The fact that appellant's vendee was named in the respective bills of lading, in connection with the letters "N'fy" or "Notify," does not change the meaning and intent of the contract made by the parties that appellant should pay to the steamship company the amount of freight agreed upon.

We are of opinion that appellant, at the time the bill of lading was executed, must be considered as the owner as well as the shipper of the flour, upon the familiar and well-settled principle of law that, where goods are shipped by a vendor to a vendee, the vendor taking a bill of lading in which the vendor is named both as consignor and consignee, which bill of lading is indorsed in blank and attached to a draft for the purchase price drawn on the vendee, the title to the goods remains in the vendor, and the vendee does not become the owner of the same until the payment of the draft. Dows v. National Exchange Bank, 91 U. S. 618, 630, 23 L. Ed. 214; Seeligson v. Philbrick (C. C.) 30 Fed. 600; Ramish v. Kirschbraun, 107 Cal. 659, 661 40 Pac. 1045; Stollenwerck v. Thacher, 115 Mass. 224, 226; Erwin v Harris, 87 Ga 336, 13 S. E. 513.

The question of ownership may be considered immaterial, under the facts of this case. The rule is that the consignor is the party primarily liable for the payment of the freight, and this rule is enforced, independent of the question whether the consignor is the owner, and regardless of the question whether the payment of freight is secured by a lien on the cargo, because the consignor is the party for whom the

Digitized by Google

service is performed. This rule is applied to clauses, often found in bills of lading, "he or they paying freight," or "he, the consignee, paying freight." In Wooster v. Tarr, 8 Allen, 270, 85 Am. Dec. 707, Bigelow, C. J., in delivering the opinion of the court, said:

"The question raised in this case is very fully discussed in Blanchard v. Page, 8 Gray, 281, 286, 290–295. It is there stated to be the settled doctrine that a bill of lading is a written simple contract between a shipper of goods and the shipowner; the latter to carry the goods, and the former to pay the stipulated compensation when the service is performed. Of the correctness of this statement there can be no doubt. The shipper or consignor, whether the owner of the goods shipped or not, is the party with whom the owner or master enters into the contract of affreightment. It is he that makes the bailment of the goods to be carried, and, as the bailor, he is liable for the compensation to be paid therefor. The dictum of Bayley, J., in Moorson v. Kymer, 2 M. & S. 318, subsequently repeated by Lord Tenterden in Drew v. Bird, Mood. & Malk. 156, that, in the absence of an express contract by the shipper to pay freight, when the goods are by the bill of lading to be delivered on payment of freight by the consignee, no recourse can be had for the price of the carriage to the shipper, has been distinctly repudiated, and cannot be regarded as a correct statement of the law. Sanders v. Van Zeller, 4 Q. B. 260, 284; Maclachlan on Shipping, 426. * * * A master is not bound at his peril to enforce payment of freight from the consignees. The usual clause in bills of lading, that the cargo is to be delivered to the person named or his assignees, 'he or they paying freight,' is only inserted as a recognition or assertion of the right of the master to retain the goods carried until his lien is satisfied by payment of the freight; but it imposes no obligation on him to insist on payment before delivery of the cargo. If he sees fit to waive his right of lien, and to deliver the goods without payment of the freight, his right to resort to the shipper for compensation still remains. Shepard v. De Bernales, 13 East, 565; Domett v. Beckford, 5 B. & Ad. 521, 525; Christy v. Row, 1 Taunt. 300. Although the receipt of the cargo under a bill of lading in the usual form is evidence from which a contract to pay the freight money to the master or owner may be inferred, this is only a cumulative or additional remedy, which does not take away or impair the right to resort to the shipper on the original contract of bailment for the compensation due for the carriage of the goods."

See, also, 7 Am & Eng. Enc. of Law, 276, and authorities there cited

In the light of all the facts in the present case, we are of opinion that there was no obligation on the part of the carrier to notify the shipper of the goods of the loss of the ship, and no penalty to be incurred by the carrier for failure so to notify. The carrier cannot be deprived of its right to collect freight unless the vessel was lost by the carrier's negligence, and there is no evidence in the record that the steamer was lost by any negligence on the part of the carrier. Negligence on the part of a carrier cannot be presumed. It must be proved by the party alleging it.

The gist of the whole case was briefly, but clearly and pointedly, expressed by the court below, to the effect that the president of appellant testified that the flour stood as security for the drafts. Whether its interest was that of ownership or lien, the parties for whom the flour was intended were to have it when paid for, and not before. "In whatever light the transaction is viewed, this is what it comes to." The consignment in the bills of lading to appellant's order, and the insurance in its name, were to this end; and the conclusion is unavoidable that appellant was the shipper, and to it the carrier's service, whether

Digitized by Google

for receiving the freight and agreeing to carry it, or for in fact carrying it, was rendered, and, as the case stands, the appellant is responsible for the freight agreed to be paid.

The decree of the District Court is affirmed, with costs.

(130 Fed. 866.)

ROTHSCHILD v. ADLER-WEINBERGER S. S. CO.

(Circuit Court of Appeals, Third Circuit. June 13, 1904.)

No. 28.

1. INSURANCE—STATE LAWS—EXTRATERRITORIAL OPERATION—LIABILITY OF AGENTS.

   Pa. Act May 1, 1876 (P. L. 66), § 48, declaring that the agent of any insurance company of any other state or government which does not comply with the laws of Pennsylvania shall be personally liable on all contracts of insurance made by or through him, directly or indirectly, for or on behalf of the company, applies only to contracts of insurance on property in Pennsylvania.

2. SAME—POLICY LIMITATIONS.

   A provision of a marine policy that all claims thereunder should be void unless prosecuted within 12 months from the date of the disaster was applicable to a suit against insurance brokers issuing certain policies on behalf of foreign companies which had not complied with the laws of Pennsylvania, under Pa. Act May 1, 1876 (P. L. 66), § 48, declaring that any agent of a foreign insurance company which has not complied with Pennsylvania laws shall be personally liable "on all contracts of insurance" made by or through him on behalf of any such company.

In Error to the Circuit Court of the United States for the Eastern District of Pennsylvania.

For opinion below, see 123 Fed. 145.

James C. Sellers, for plaintiff in error.

Horace L. Cheyney, for defendant in error.

Before ACHESON, DALLAS, and GRAY, Circuit Judges.

DALLAS, Circuit Judge. On the trial of this case in the Circuit Court, the jury was directed to find a verdict in favor of the plaintiff below for $5,385.29, the learned trial judge reserving the question whether there was any evidence to go to the jury in support of the plaintiff's claim. A verdict was rendered accordingly, and, after argument upon the motion of the defendant for judgment in his favor non obstante veredicto, a judgment for plaintiff was entered upon the verdict. Thereupon the defendant sued out this writ of error.

The action was based upon section 48 of the Pennsylvania statute of May 1, 1876 (P. L. 66), to wit:

"The agent of any insurance company of any other state or government, which does not comply with the laws of this commonwealth, shall be personally liable on all contracts of insurance made by or through him, directly or indirectly, for or in behalf of any such company."

¶ 2. Conditions in insurance policy as to time for bringing suit, see notes to Steel v. Phœnix Ins. Co., 2 C. C. A. 473; Rogers v. Home Ins. Co., 35 C. C. A. 404.

Digitized by Google

The facts are sufficiently stated in the opinion of the court below, as follows:

"The plaintiff, a citizen of Louisiana, in March, 1900, obtained the three marine policies in question through a firm of ship brokers in New Orleans. The vessel traded between New Orleans, Mobile, and Honduras, and was at the first-named port when the policies were written. The New Orleans broker applied for the insurance to another firm of brokers in Tampa, Fla., who in turn applied by mail to the defendant Rothschild & Co. The application was received at the defendants' office, 411 Walnut street, Philadelphia, and two of the policies were afterwards mailed by them from Philadelphia to the Tampa brokers, by whom they were forwarded to New Orleans. In August following, the New Orleans brokers wrote to the defendants at Philadelphia for a third policy, and this was mailed directly to New Orleans. The premiums were sent by mail to the defendants at Philadelphia, and were there received. Later several slips, or permits, were obtained from them, also by mail, to be attached to the policies. On these slips the defendants described themselves as agents for the respective companies. The policies were all issued by companies foreign to Pennsylvania, and none of them had complied with the laws of that state. There was evidence that the written portion of two of the policies was in the handwriting of the defendants' bookkeeper, and had been filled in at their office in Philadelphia. It did not appear where or by whom the other policy had been filled in, but the defendants did not deny that they had prepared and mailed it in Philadelphia, nor did they deny at the trial that they were agents of the respective companies by whom the policies were issued. The loss occurred in September, 1900, and this suit was brought by the insured on February 1, 1902, under the foregoing section, to recover from the defendants the amount of the loss."

Is section 48 of the Pennsylvania statute of May 1, 1876 (P. L. 66), properly applicable to a policy of insurance issued to a person not a citizen nor a resident of Pennsylvania, upon property not situated within that state? No doubt, the language of the section is inclusive of "all contracts of insurance," but as the liability it imposes is an extraordinary and penal one, it should not be held to embrace anything beyond what clearly appears to have been contemplated by the Legislature, and for ascertainment of the legislative intent attention is not to be confined to the words employed, but the familiar rule must be applied, "that a thing may be within the letter of the statute and yet not within the statute, because not within its spirit, nor within the intention of its makers." Holy Trinity Church v. United States, 143 U. S. 459, 12 Sup. Ct. 511, 36 L. Ed. 226. As was said in the case just cited, "We cannot think the Legislature intended to denounce with penalties a transaction like that in the present case," and that it did not in fact intend to do so becomes apparent when other of the Pennsylvania statutes upon the subject of insurance are considered, as they should be, in connection with the particular section in question. Bacon's Abr. "Statute" (1, 3). These statutes, in so far as material—including, for completeness, the section heretofore quoted—are as follows:

The act of April 4, 1873 (P. L. 20), provides:

"Sec. 9. It shall be unlawful for any person, company or corporation, to negotiate or solicit within this state any contract of insurance, or to effect an insurance or insurances, or pretend to effect the same, or to receive and transmit any offer or offers of insurance, or receive or deliver a policy or policies of insurance, or in any manner to aid in the transaction of the business of insurance without complying fully with the provisions of this act.

"Sec. 10. No person shall act as agent or solicitor in this state of any insurance company of another state, or foreign government, in any manner

Digitized by Google

whatever relating to risks, until the provisions of this act have been complied with on the part of the company or association, and there has been granted to said company or association, by the Commissioner, a certificate of authority, showing that the company or association is authorized to transact business in this state; and it shall be the duty of every such company or association, authorized to transact business in this state, to make report to the Commissioner in the month of January of each year, under oath of the president or secretary thereof, showing the entire amount of the premiums of every character and description received by said company or association in this state, during the year or fraction of a year ending with the thirty-first day of December preceding, whether said premiums were received in money or in the form of notes, credits or any other substitute for money, and pay into the state treasury a tax of three per centum upon said premiums; and the Commissioner shall not have power to grant a renewal of the certificate of said company or association until the tax aforesaid is paid into the state treasury.

"Sec. 11. Companies to which certificate of authority are issued, as provided in the preceding section, shall, from time to time, certify to the Commissioner the names of the agents appointed by them to solicit risks in this state; and no such agent shall transact business until he has procured from the Commissioner a certificate, showing that the company has complied with the requirements of the act, and that the person named in said certificate has been duly appointed its agent."

"Sec. 14. That any person or persons, or corporation, receiving premiums or forwarding applications, or in any other way transacting business for any insurance company or association not of this state, without having received authority agreeably to the provisions of this act, shall forfeit and pay to the commonwealth the sum of five hundred dollars for each month or fraction thereof during which such illegal business was transacted, and any company not of this state doing business without authority, shall forfeit a like sum for every month or fraction thereof, and be prohibited from doing business in this state until such fines are fully paid."

The act of May 1, 1876 (P. L. 53), which is a supplement to the act of April 4, 1873, provides:

"Sec. 47. Any person transacting business within this commonwealth as the agent of an insurance company of any other state or government, without a certificate of authority, as required by the act to do which this is a supplement, shall be guilty of a misdemeanor, and upon conviction thereof shall be sentenced to pay a fine of five hundred dollars, but this section shall not be held to prevent the Insurance Commissioner from pursuing the remedy or remedies provided in the act aforesaid. The person or persons on whose complaint such conviction is had, shall receive one half of the fines so paid, provided the insurance commissioner or his deputy is not the complainant.

"Sec. 48. The agent of any insurance company of any other state or government, which does not comply with the laws of this commonwealth, shall be personally liable on all contracts of insurance made by or through him, directly or indirectly, for or in behalf of any such company."

The act of April 26, 1887 (P. L. 61), amended section 14 of the act of April 4, 1873, so as to read:

"That any insurance company or association not of this state, doing business without authority agreeably to the provisions of this act, shall forfeit and pay to the commonwealth the sum of five hundred dollars for each month, or fraction thereof, during each month, on and after the passage of this act, which such illegal business was transacted, and be prohibited from doing business in this state until such fines are fully paid. And that any person or persons, or any agent, officer, or member of any corporation paying, or receiving or forwarding any premiums, applications for insurance, or in any manner securing, helping, or aiding in the placing of any insurance, or effecting any contracts of insurance upon property within this commonwealth, directly or indirectly, with any insurance company or association not of this

Digitized by Google

state, and which has not been authorized to do business in this state under the terms of this act, shall be guilty of a misdemeanor, and, on conviction thereof, shall be sentenced to a fine of not less than one hundred dollars nor more than one thousand dollars, and upon conviction of a second offence shall be sentenced to pay a like fine and undergo an imprisonment not exceeding one year, or either, in the discretion of the court."

The first-mentioned of these acts is the earliest one regulating insurance by foreign companies which is now in force in Pennsylvania. It established "a distinct department * * * charged with the execution of the laws of this state in relation to insurance," and it is evident that by it and the later acts it was purposed to create and perfect a general system of regulations and requirements respecting the transaction of business by foreign companies within the limits of the state, with the manifest object of affording protection to those taking insurance from such companies, either directly or through agents. But whom was it intended to protect? Presumably, of course, the citizens and the residents of Pennsylvania, or, at the utmost, such persons, also, as, being neither citizens nor residents of that state, might have insurable interests in property there situated. Waiving the question which has been argued as to the competency of any state to affect by such legislation persons and things not within its territorial boundaries, we are satisfied that in this instance no attempt to do so was made. The words "within this state," and "in this state," as they occur in sections 9, 10, and 11, p. 26, of the act of 1873, and the words "within this commonwealth," as they occur in section 47, p. 66, of the act of 1876, and especially the provision of section 10 of the act of 1873 for reports for taxation, persuasively indicate, if they do not positively show, that this system of legislation was not intended to apply to such a case as this; and, finally, we have in the act of 1887 the phrase "any contracts of insurance upon property within this commonwealth," which, in our opinion, is tantamount to an express legislative definition of the intended scope of the whole series of statutes. And, as the section immediately involved is included in the series, it follows that the contracts upon which the agent is thereby made liable are such contracts of insurance as are upon property in the commonwealth of Pennsylvania, and no others.

Furthermore, this action, even if otherwise maintainable, was, we think, barred by the clause, which each of the policies contains, "that all claims under this policy shall be void unless prosecuted within twelve months from the date of the disaster." The disaster here involved occurred in September, 1900, and the suit was begun on February 1, 1902. The terms of this provision were therefore met, and that it would be enforceable in favor of the companies themselves seems not to be denied, and we think is unquestionable. It is contended, however, that the defendant below was not entitled to benefit by it, because, as is argued, it is a "subsequent condition imposed upon the assured by the contract," like the ordinary provision for proofs of loss, which it was said in McBride v. Rinard, 172 Pa. 543, 33 Atl. 750, need not, to consummate the agent's liability, be complied with by furnishing proofs of loss to the company. But we are not dealing with a condition affecting the agent's liability, but with a contractual limitation of the time within which his liability, assuming its unconditional existence, may

Digitized by Google

be enforced, and the real and only question is whether this limitation is properly applicable to an action founded upon the forty-eighth section of the act of 1876. That section, as we have said, is a penal one, and the particular penalty it prescribes is not open to conjecture. It is distinctly specified. It is that the offending agent "shall be personally liable on all contracts of insurance made by or through him." The contracts are not to be extinguished. They must continue in force, for otherwise there would be nothing of which liability on the contract could be predicated. If it was not intended that the agent would be liable precisely as if he had been a principal party to the contract, it would, we think, be difficult to perceive that any penalty whatever was designated. We need not question the correctness of the statement of the Supreme Court of Pennsylvania (McBride v. Rinard, supra) that it would be a mistake to assume "the liability of the agent to be no higher than that of sureties or guarantors for the foreign company which had violated the law." As was said by that court, "the moment the agent makes a contract for a foreign insurance company which has neglected to obtain the proper authority from the Insurance Commissioner to do business in this state, that is the inception of the agent's liability on the contract, which is consummated by the loss by fire." But the liability is "on the contract," and therefore, though compliance with "every subsequent condition imposed upon the assured" may not be requisite to establish its existence, it ceases to be enforceable upon the expiration of the period contractually limited for its enforcement. The agreement for the limitation in this case, and the reasons upon which such agreements are founded, are quite as appropriate to an action against an agent as to a suit against a company, and it is not supposable that the Legislature designed that in this regard the assured should have, as against the former, a policy more favorable to himself than that which he had been content to accept from the latter.

The views we have expressed necessitate the conclusion that the judgment entered for the plaintiff below was erroneous. Therefore that judgment is reversed, and the cause will be remanded to the Circuit Court with direction to enter a judgment for the defendant notwithstanding the verdict.

(130 Fed. 870.)

LONG v. LEHIGH VALLEY R. CO.

(Circuit Court of Appeals, Second Circuit. April 14, 1904.)

No. 146.

1. CARRIERS—INJURY OF EXPRESS MESSENGERS—CONTRACT LIMITING LIABILITY.

An express messenger while riding in a railway car in the performance of the duties of his employment is not a passenger, nor does the railroad company occupy the relation of common carrier toward him, but of a private carrier only, and there is no public policy which forbids the parties from contracting for its exemption from liability for negligence in the carrying of such messenger; and a contract with the express company by which the messenger, as a condition of his employment, assumes all

---

¶ 1. Limitation of liability for injury to passengers, see note to Clark v. Geer, 32 C. C. A. 301.

Digitized by Google

risk of injury while so riding, and one between the express and railroad companies by which the former agrees to hold the latter indemnified against claims for injuries to its employés, whether arising from negligence or otherwise, are valid and effective to prevent a messenger injured in collision due to the negligence of railroad employés from recovering therefor against the railroad company.

2. SAME—CONSTRUCTION OF CONTRACT OF EMPLOYMENT.

A contract by which an express messenger, as a condition of his employment, assumes all risk of personal injury while riding on any transportation line, and agrees to release and indemnify the company or any transportation company with which it may contract from any claim which might be made on account of any such injury, must be construed to apply to an injury resulting from negligence of a railroad company in whose car he is riding in the course of his employment, since, not being a passenger while so riding, no claim could be made against the company except on the ground of negligence.

3. SAME.

An express messenger riding in a railway car in the discharge of the duties of his employment is chargeable with notice of the contract under which he is being transported by the railroad company.

In Error to the Circuit Court of the United States for the Western District of New York.

E. C. Aiken, for plaintiff in error.

James McMitchell, for defendant in error.

Before WALLACE, LACOMBE, and TOWNSEND, Circuit Judges.

WALLACE, Circuit Judge. This is a writ of error by the plaintiff in the court below to review a judgment for the defendant. Upon the trial the court directed the jury to render a verdict for the defendant. The assignments of error challenge the correctness of that ruling.

The action was brought to recover damages for personal injuries sustained by the plaintiff. At the time of the accident in which he was injured he was in the employment of the United States Express Company as a messenger, and was engaged in the duties of such employment in an express car on one of the defendant's trains. The accident was caused by a collision between that train and a switching engine of the defendant, owing to the negligence of the employés of the defendant in charge of the switching engine. The contract of employment between the plaintiff and the United States Express Company contained the following provision:

"I understand that I may be required to render services for the company on or about the railroad, stage and steamboat lines used by the company for forwarding property, and that such employment is hazardous; I assume the risk of accident and injury to myself arising out of such employment, and release and indemnify the United States Express Company, and the corporations or persons owning or operating said transportation lines, from any or all claims that I or my executors or administrators might make, arising out of any such accidents or injuries that may happen to me while so employed."

By a contract between the United States Express Company and the defendant, in force at the time the plaintiff entered upon his employment and at the time of the accident, it was provided that the defendant should not be or become liable or responsible to any person for any damage or injury happening to or sustained by any employé, servant, or

Digitized by Google

agent of the express company while acting for the express company in or about its business, whether such injury should have been occasioned by or through the negligence, omission, or default of the railroad company, or otherwise, "it being distinctly understood and agreed that the express company hereby assumes and undertakes to pay and indemnify the railroad company for and against all and every claim and demand for loss and injury of any nature to life, person or property arising from the performance of this contract."

The trial judge ruled that, in view of the contracts between the plaintiff and the express company, and the express company and the defendant, the defendant was not liable. It is quite unnecessary to refer to the numerous decisions in the state courts on similar or analogous cases. The case of Baltimore & Ohio Railway Company v. Voigt, 176 U. S. 498, 20 Sup. Ct. 385, 44 L. Ed. 560, is decisive, and is controlling as authority in this court. In that case Voigt had made a contract with the express company by which, as a condition of his employment as an express messenger, he agreed to assume the risk of all accidents and injuries that he might sustain in the course of his employment by negligence or otherwise, and to indemnify and hold the express company harmless for all claims that might be made against it arising from any claim or recovery on his part for the damages sustained by him by reason of any injury whatever resulting from negligence or otherwise, and to release to the company operating the transportation line upon which he might be injured all claims, demands, and causes of action arising out of any such injury, and to ratify all agreements made by the express company with any transportation line, in which the express company had agreed or might agree that its employés should have no cause of action for injuries sustained in the course of their employment upon the line of the transportation company. The express company had made a contract with the Baltimore & Ohio Railway Company substantially like that between the express company and the defendant in the present case. While in an express car upon one of the trains of the railroad company, engaged in performing his duties as express messenger, Voigt was injured by a collision between the train to which his car was attached and another train of the railroad, caused by the negligence of the employés of the railroad company. The court held that Voigt, occupying the express car as a messenger in charge of express matter, in pursuance of the contract between the companies, was not a passenger; that he was not constrained to enter into the contract whereby the railroad company was exonerated from liability to him; and that such a contract did not contravene public policy. The case was presented to the court upon a certificate of a division of opinion between the judges in the court below, and although, in answering the questions certified, it was not necessary for the court to decide whether the railroad company was liable to Voigt under the circumstances, the answer necessarily enforced that conclusion. The opinion proceeds upon the reasoning that Voigt's only right to be on the train of the railroad company was that created by the terms of his contract with the express company; that the railroad company did not assume towards him the obligations of a common carrier to a passenger, but only assumed those of a private carrier; and

Digitized by Google

that a private carrier is free to contract as to the conditions of the carriage, and no reason of public policy forbidding a common carrier from stipulating against its own negligence applies to such a contract. It is said that the contract in that case in terms included among the risks assumed by the express messenger accidents and injuries occasioned by negligence, while the contract here does not; and it is urged that, in the absence of such a stipulation, the contract should be construed not to extend to that class of accidents or injuries. This contention would doubtless be sound if the parties contracting had not been treating on terms of equality, as is the case between a common carrier and a shipper of goods or a passenger. But when this is not the case, and no rule of public policy forbids a contract by which one of the parties is exonerated from any risk arising from negligence, there is no reason why the ordinary rules of construction should not obtain, and the contract be given effect according to the intention of the parties. The observations of this court in McCormick v. Shippy, 124 Fed. 48, 59 C. C. A. 568, are appropriate:

"There is no question of public policy involved in this contract, as in the case of a common carrier. It is well settled that the parties in such a case have the right to provide by apt language against liability for negligence. * * * The clause must be interpreted to include loss through negligence, because for loss not arising from negligence he would not be liable."

So, in this case, the defendant, being merely a private carrier in respect to the plaintiff, owed him merely the duty of ordinary care, and could only have been liable to him for injuries arising from negligence, and the release made in advance must have contemplated accidents and injuries of that character. In Bates v. Railroad Company, 147 Mass. 255, 17 N. E. 633, the agreement between the express messenger and the express company was that the former "will assume all risk, and accidents and injuries resulting therefrom, and will hold said company free and discharged from all claims and demands in any way growing out of any injuries received by him while so riding." In Hosmer v. Railroad Company, 156 Mass. 506, 31 N. E. 652, the plaintiff was an expressman, and had agreed that, in consideration of the company's allowing him to ride in baggage cars on its trains, he would "assume all risk of accidents and injuries resulting therefrom." In both cases the language of the contract, although not expressly including injuries or accidents by negligence, was construed to relieve the railroad company from liability for injuries by negligence. In Chicago, etc., R. Co. v. Wallace, 66 Fed. 506, 14 C. C. A. 257, 24 U. S. App. 589, 30 L. R. A. 161, the language of the contract was as general as it is in the present case, and the railroad company was exonerated from liability.

It is also urged for the plaintiff that the contract did not release the defendant in the absence of evidence tending to show that the plaintiff had any knowledge or information of the provisions of the contract between it and the express company. Upon this point the language of Judge Earl in Blair v. Erie Railway Company, 66 N. Y. 313, 23 Am. Rep. 55, commends itself to our approval:

"He was not a passenger upon the train. He was upon the train in an express car, engaged in the separate business of the express company. He was

Digitized by Google

in that car lawfully, only as he was there under the agreement. He knew that he had not paid any fare, and that he had made no contract for his carriage. He must have known that he was there under some arrangement between the express company and the defendant, and that whatever right he had to be transported was as the servant of the express company. He was there, not in his own right, but in the right of the express company, and hence he was bound by the arrangement that company made for him."

Moreover, the general language of the release extended to every contract, existing or future, between the express company and any corporation operating a transportation line upon or by which the plaintiff might encounter the risk of accident or injury.

The ruling of the court below in directing a verdict was correct, and the judgment is affirmed.

(130 Fed. 874.)

BATTIN v. NORTHWESTERN MUT. LIFE INS. CO.

(Circuit Court of Appeals, Third Circuit. June 13, 1904.)

No. 41.

1. INSURANCE—ACTION ON POLICY—PLEADING.

In an action on a life policy, an allegation that defendant has, in its dealings with assured, now deceased, treated the policy as in force, without stating the facts showing the nature of such dealings and treatment, was not sufficiently specific.

2. SAME—CONDITIONS—PREMIUM—NONPAYMENT—WAIVER.

Where a declaration on a policy of life insurance alleged that on August 20, 1901, when a certain premium of $146.80 became due and payable, insured paid on account thereof the sum of $38.75, which was accepted by defendant as a payment on account of said premium, and that a credit was given to assured for the unpaid balance, it sufficiently alleged a waiver of a provision of the policy that, if the premium shall not be paid at or before the time mentioned for payment thereof, the policy shall cease, etc.

3. SAME.

Where in an action on a policy the declaration alleged that, on the maturity of a premium, insured paid and defendant accepted a certain amount as a credit thereon, and extended credit to insured for the unpaid balance, but did not allege that any premium whatever was actually paid on that day, a provision of the policy that no premiums after the first should be considered paid unless a receipt should be given therefor signed by the president or secretary of the company, and that the payment and receipt of any premium less than a full annual premium should not have the effect to continue the policy longer than three months in case of a quarterly payment, or six months in case of a semiannual payment, was not involved.

In Error to the Circuit Court of the United States for the Middle District of Pennsylvania.

Joseph A. Culbert, for plaintiff in error.

E. N. Willard, for defendant in error.

Before ACHESON, DALLAS, and GRAY, Circuit Judges.

DALLAS, Circuit Judge. Plaintiff's "statement of claim" in the court below was as follows:

"The plaintiff in the above case, Mary F. Battin, claims of the defendant, the Northwestern Mutual Life Insurance Company, the sum of five thousand

Digitized by Google

dollars ($5,000), with interest from the 8th day of April, which sum is now justly due and payable to the plaintiff by the defendant, upon the cause of action whereof the following is a statement:

"On or about the 20th day of August, 1894, William J. Battin, plaintiff's husband, applied for and received a policy of insurance on his life in favor of the plaintiff, in the defendant company, in the sum of five thousand dollars ($5,000), a copy of the said policy being hereunto annexed and made a part hereof, and marked 'Exhibit A.' The consideration for the issuance of the said policy of insurance by the defendant company was the payment to them of the sum of one hundred and forty-six dollars and eighty cents ($146.80) on the same day and annually thereafter, and the said policy was conditioned that on the death of the said William J. Battin the said defendant company would pay to the said plaintiff the sum of five thousand dollars ($5,000).

"And the plaintiff further avers that the said annual payments of one hundred and forty-six dollars and eighty cents ($146.80) aforesaid, being the premium on the said policy, were paid to the defendant company as the same fell due. On August 20, 1901, when the said premium of one hundred and forty-six dollars and eighty cents ($146.80) became due and payable, the said William J. Battin paid on account thereof the sum of thirty-eight dollars and seventy-five cents ($38.75), which was accepted by the defendant company as a payment on account of the said premium, and a credit was given to the said William J. Battin for the unpaid balance. The said premium of thirty-eight dollars and seventy-five cents ($38.75) has been and is still retained by the defendant, and since the payment thereof, and as late as December 20, 1901, the said defendant has in its dealings with the said William J. Battin, now deceased, treated the said policy as in force.

"On or about the 28th day of January, 1902, the said William J. Battin departed this life. On or about the 4th day of February, 1902, due proof of the death of the said William J. Battin, in accordance with the terms of the said policy, was made to the said defendant company, and demand was then and there made upon it to pay the said five thousand dollars ($5,000) due under said policy to the beneficiary named therein, Mary F. Battin, the plaintiff in this case, less, however, the sum of one hundred and ninety-five dollars ($195), with interest thereon from June 18, 1901, the said amount being a loan from the defendant to the said William J. Battin upon the security of said policy. And the said defendant then and there refused to pay the said sum demanded unto the plaintiff, and has continued down to the present day to refuse and to neglect to pay the said sum, or any part thereof, unto the plaintiff. The plaintiff having repaid to the defendant the said sum of one hundred and ninety-five dollars ($195), with interest from June 18, 1901, and having received from the defendant the said policy of insurance, now brings this her suit for the full amount of the said policy, with interest as aforesaid, having first demanded of defendant the payment of said $5,000, which the defendant refused and continues to refuse to make."

The policy sued upon contained, inter alia, the following condition:

"1st. If the said premium shall not be paid at or before the time within mentioned for the payment thereof, then, and in every such case this policy shall cease and determine; and no premium after the first, hereby acknowledged, shall be considered paid unless a receipt shall be given therefor, signed by the President or Secretary, and the payment and receipt of any premium less than a full annual shall not have the effect to continue this policy in force longer than three months in case of a quarterly payment, or six months in case of a semi-annual payment."

The defendant demurred to the statement of claim. Of the causes of demurrer assigned, two only are substantial, viz.:

"(1) Having admitted the nonpayment of $146.80, which was due on the 20th day of August, 1901, the declaration sets forth no waiver of the condition above quoted, and therefore the declaration shows that the policy was null and void at the time of the death of the said William J. Battin, which, it is alleged in the declaration, occurred on the 28th day of January, 1902.

Digitized by Google

"(2) The declaration fails to state what credit, if any, was given; for how long a time; or the character of the dealings between the plaintiff and the defendant creating the alleged extension of the credit or waiver. And it also fails to state how or in what manner the said defendant treated the said policy as in force as late as December 20, 1901, and, if it was treated as in force on that date, there is no allegation that it was in force at the time of the death of William J. Battin, to wit, on the 28th day of January, 1902."

The Circuit Court entered judgment for the defendant upon the demurrer, and thereupon the plaintiff sued out this writ of error.

We think the learned judge of the court below was right in holding that the allegation that "the said defendant has, in its dealings with the said William J. Battin, now deceased, treated the said policy as in force," was too vague and general. Whether the policy was or was not in force was a question of law, and the facts necessary to be known for its proper determination should have been explicitly stated. Whether the defendant's dealings with Battin, and its treatment of the policy, were such as to maintain the policy in force, could not be decided without information of what those dealings and treatment had been, and that information this averment did not supply. Therefore it was not, when separately considered, sufficient.

But we cannot agree that, "having admitted the nonpayment of $146.80, which was due on the 20th day of August, 1901; the declaration sets forth no waiver of the condition above quoted." What the declaration does set forth is:

"On August 20, 1901, when the said premium of $146.80 became due and payable, the said William J. Battin paid on account thereof the sum of $38.75, which was accepted by the defendant company as a payment on account of the said premium, and a credit was given to the said William J. Battin for the unpaid balance."

This statement is distinct and definite, and therefore, as to it, the only question is whether the acceptance by the defendant of a payment on account of the annual premium due August 20, 1901, amounted to a waiver of the condition that a failure to pay any premium at or before the time mentioned in the policy for the payment thereof would incur a forfeiture of the policy. We are of opinion that it did. It clearly indicated an election by the company to waive the forfeiture, and Battin was entitled to rely upon that election. Insurance Co. v. Eggleston, 96 U. S. 572, 24 L. Ed. 841. This waiver was not repugnant to the written agreement; it was but the exercise of an option which the written agreement left to the company; "and whether it did exercise such option or not was a fact provable by parol evidence, as well as by writing, for the obvious reason that it could be done without writing." "Forfeitures are not favored in the law. They are often the cause of great oppression and injustice. And where adequate compensation can be made, the law in many cases, and equity in all cases, discharges the forfeiture upon such compensation being made. It is true we held in Statham's Case, 93 U. S. 24 [23 L. Ed. 789], that in life insurance time of payment is material, and cannot be extended by the courts against the assent of the company. But where such assent is given, the court should be liberal in construing the transaction in favor of avoiding a forfeiture." Insurance Co. v. Norton, 96 U. S. 240–242, 24 L. Ed. 689. "Any agreement, declaration, or course of action on the

Digitized by Google

part of an insurance company which leads a party insured honestly to believe that by conforming thereto a forfeiture of his policy will not be incurred, followed by due conformity on his part, will and ought to estop the company from insisting upon the forfeiture, though it might be claimed under the express letter of the contract." Insurance Co. v. Eggleston, 96 U. S. 577, 24 L. Ed. 841.

The condition in question also contained declarations that no premiums after the first should be considered paid unless a receipt should be given therefor signed by the president or secretary, and that the payment and receipt of any premium less than a full annual should not have the effect to continue the policy longer than three months in case of a quarterly payment, or six months in case of a semiannual payment. But in this case these declarations are not involved, for it has not been alleged that any premium whatever was actually paid on August 20, 1901, but only that a payment on account of the annual premium then due was made.

The statement of claim did not set forth the evidence to be adduced in its support, and it should not have done so. It did disclose the condition we have discussed, and clearly and succinctly stated facts which, notwithstanding that condition, would, if proved, entitle the plaintiff to recover, and this is all that was requisite. Therefore the judgment of the circuit court is reversed, with costs, and the cause will be remanded to that court with direction to overrule the demurrer, but with leave to the defendant to plead over within such time as that court shall prescribe.

(130 Fed. 877.)

LADEN et al. v. MECK et al.

(Circuit Court of Appeals, Sixth Circuit. July 1, 1904.)

No. 1,275.

1. REMOVAL OF CAUSES—PETITION—ALLEGATION OF CITIZENSHIP.
   An allegation in a petition for removal, merely, that certain of the petitioners are "residents" of a state other than that of which plaintiff is a citizen, and that none of the petitioners are "residents and citizens" of the state whereof the plaintiff is a citizen, is insufficient to give the federal court jurisdiction.

2. SAME—SEPARABLE CONTROVERSY.
   To authorize a removal by one or more of the defendants on the ground that there is a separable controversy which is "wholly between citizens of different states," it must appear from the petition that each party to the controversy is a citizen of some state.

3. SAME.
   The question whether there is a separable controversy in a suit, which will authorize its removal, must be determined by the state of the pleadings and the record at the time of filing the petition for removal.

¶ 1. Averments of citizenship to show jurisdiction of federal courts, see note to Shipp v. Williams, 10 C. C. A. 261.

See Removal of Causes, vol. 42, Cent. Dig. §§ 170, 173.

¶ 2. Separable controversy as ground for removal of cause to federal courts, see notes to Robbins v. Ellenbogen, 18 C. C. A. 86; Mecke v. Valleytown Mineral Co., 35 C. C. A. 155.

Digitized by Google

Appeal from the Circuit Court of the United States for the Northern District of Ohio.

This is a suit originally brought in the court of common pleas for Wyandotte county, Ohio, by Meck against the other appellees and the appellants, for the specific performance of a contract in writing for the sale to him by the said John A. Mathews and Rumina E., Anna, and David Ayres of a parcel of land in Upper Sandusky, in said county. The petition alleged the contract of sale, the performance of the contract by the petitioner, the refusal of the vendors to make the deed stipulated for in the contract, and the tender of the purchase money, which he brought into court. The petition represented that Ida Hurst Mathews was the wife of John A. Mathews, and claimed some interest in the premises, and that the other defendants asserted claims by way of assignments of parts of the purchase money, or, as in the case of the defendants Laden, by liens acquired by attachment, or, as in the case of other defendants, by liens upon the purchase money. The case was removed into the Circuit Court of the United States upon the petition of the defendants John A. and Ida Hurst Mathews and Rumina E., Anna, and David Ayres. A motion was made by the defendant Fraser to remand the case to the state court upon the grounds that the petition for removal did not show sufficient facts to give jurisdiction to the Circuit Court of the United States, and because there was no separable controversy. The motion was denied. Pleadings were filed by the defendants, and proofs were taken before the master, whose report was confirmed by the decree of the court. The decree, which was for the enforcement of the contract, declared the rights of the various parties, and, among other things, denied the claim of the defendants Laden. These last-named parties thereupon appealed to this court.

Foran, McTighe & Gage, for appellants.

Before LURTON, SEVERENS, and RICHARDS, Circuit Judges.

SEVERENS, Circuit Judge, having made the preceding statement, delivered the opinion of the court.

When this appeal came on for hearing, it was observed that a question concerning the jurisdiction of the court below was presented by the record, but we consented to pass it and hear the arguments of counsel upon the merits. Upon consideration we are convinced that the removal into the Circuit Court was unauthorized, and that we cannot consider its decree upon the merits.

In view of the facts that the only concern of the removing defendants was with the question whether their contract with the complainant should be specifically enforced, while the other defendants were concerned with questions relating to the disposition of the purchase money, it may be that the removing defendants had a separable controversy with the complainant. We do not, however, decide that question. The petition did not in terms claim that there was a separable controversy. In respect to the citizenship of the parties the petition alleged "that, at the time said suit was brought, the plaintiff was, and still is, a resident and citizen of the state of Ohio, and that the defendants John A. Mathews and Ida Hurst Mathews were, and still are, residents and citizens of the state of Michigan; that the defendants Rumina Ayres, David Ayres, and Anna Ayres were, and still are, residents of the state of Illinois, and that none of your petitioners herein are residents and citizens of the state of Ohio." The difficulty is that the citizenship of the defendants Ayres is not alleged. It appears only that they are residents of Illinois, and are not citizens of Ohio. It is not shown that

Digitized by Google

they are citizens of any other state, and, for aught that appears, they may have been citizens of the District of Columbia or of some territory, in which case the suit would not have been removable. Hepburn v. Ellzey, 2 Cranch, 445, 2 L. Ed. 332; New Orleans v. Winter, 1 Wheat. 91, 4 L. Ed. 44; Barney v. Baltimore, 6 Wall. 280, 18 L. Ed. 825; Hooe v. Jamieson, 166 U. S. 395, 17 Sup. Ct. 596, 41 L. Ed. 1049. Or, indeed, they may have been aliens. While the statute provides for the removal of some cases by aliens, in the instance of separable controversies the controversy must be "wholly between citizens of different states." It is supposed, in Dillon on Removals by Black, § 84, that "the failure to extend the right of removal in such a case is a casus omissus." But Chief Justice Waite, in King v. Cornell, 106 U. S. 395, 1 Sup. Ct. 312, 27 L. Ed. 60, demonstrates that the omission was intentional. At all events, it is clear that the parties to the separable controversy must all be citizens of states, in order to found the right of removal from the state court. And the members of each of the respective parties to that controversy must all be citizens of different states from those of the members of the opposite party. Removal Cases, 100 U. S. 457, 25 L. Ed. 593; Fraser v. Jennison, 106 U. S. 191, 1 Sup. Ct. 171, 27 L. Ed. 131. And the question whether there is a separable controversy must be determined by the state of the pleadings and the record at the time of filing the petition for removal, and not by any subsequent proceedings which may be had in the case. Barney v. Latham, 103 U. S. 205, 26 L. Ed. 514; Wilson v. Oswego Township, 151 U. S. 56, 66, 14 Sup. Ct. 259, 38 L. Ed. 70.

It follows that the removal of this case from the state court was unauthorized. The decree of the court below must be reversed, and the cause remanded, with instructions to remand it to the state court from which it was removed; the costs of both the circuit and this court to be paid by the removing defendants.

(130 Fed. 813.)

BUNKER HILL & SULLIVAN MINING & CONCENTRATING CO. v. JONES.

(Circuit Court of Appeals, Ninth Circuit. May 2, 1904.)

No. 987.

1. MASTER AND SERVANT—DUTY OF MASTER—SAFE PLACE TO WORK.
   It is the absolute duty of a master to provide a reasonably safe place in which the servant shall work, having regard to the kind of work and the conditions under which it must necessarily be performed.

2. SAME—INSPECTION OF MINE—RIGHT OF MINER TO RELY ON PERFORMANCE OF DUTY BY OWNER.
   It is not the duty of a miner employed to operate a drill in a mine to inspect the timbering or the condition of the rock above him, but he has the right to assume that the master has performed his duty in making the place where he is directed to work reasonably safe, and to proceed with his work in reliance on such assumption, unless a reasonably

¶ 2. See note at end of case.

Digitized by Google

prudent and intelligent man, in the performance of his work, would have learned facts from which he would have apprehended danger to himself.

3. SAME—ASSUMPTION OF RISK.

While a person entering voluntarily into a contract of service assumes all the risks and hazards ordinarily incident to the employment, and such as are liable to arise from defects which are patent and obvious to a person of his experience and understanding, he does not ordinarily assume risks arising out of the negligence of the master.

4. SAME—INJURY OF SERVANT—FELLOW SERVANTS.

A mine owner cannot avoid liability for the injury of a miner, arising from his failure to perform the absolute duty he owes to employés to make proper inspection, and to provide a reasonably safe place for the miners to work, by delegating such duty to one who is in another respect a fellow servant of the miner injured.

In Error to the Circuit Court of the United States for the District of Oregon.

For opinion below on motion for new trial, see 124 Fed. 675.

This is an action for damages for personal injuries sustained by the defendant in error while working in one of the mines of the plaintiff in error. It is alleged in the complaint that the plaintiff (defendant in error) was at the time of his injury, on February 13, 1902, and for some time prior thereto had been, in the employ of the defendant company in the capacity of miner and machineman; that at the time of the injury he was working as machineman in the west end of the Bodero stope of the defendant's mine, and on the floor thereof next to the top floor; that the ore and rock in the mine are loose and liable to cave, and more particularly in the roof of the stopes; that it was therefore necessary for the defendant, in working the mine, to cause timbers and lagging to be placed therein, and in the roof of the stopes, from time to time, as the work progressed, to make the same safe, and to inspect or cause to be inspected the roof of the stopes and places in and about the mine, and that it "was the duty of the said defendant mining company to cause the said place where this plaintiff was engaged, ordered, and directed to be and work to be safe, and to have the roof of said stope timbered so as to make the same safe; that, at the point where this plaintiff was engaged as aforesaid, the said defendant had theretofore excavated a large chamber, more than 40 feet in length by 10 feet in width, the roof thereof being then and there 10 feet and more from the floor of said stope, which said roof, owing to the character and condition of the rock therein, became dangerous and unsafe, and it became and was the duty of the said defendant to cause the same to be timbered and braced so that the said roof could not fall, and to inspect said roof in order to ascertain and prevent rocks and ore from falling from the roof thereof." It is further alleged that the defendant company put the plaintiff to work at the place indicated without adequately securing the roof of the stope, and without providing any protection for the plaintiff, when, without any fault or negligence on his part, and solely on account of the negligence and carelessness of the defendant, a large mass of earth, ore, and rock fell from the roof of said stope, over, against, and upon the plaintiff, and inflicted upon him serious injury, as a result of which he is, and will continue to be, lame and crippled, and unable to perform any work calling for the exercise of physical exertion.

The defendant, in its amended answer, denied that the ore and rock in the mine were loose or liable to cave; denied that the roof of the stope was or had become dangerous or unsafe, or that it had been permitted to become dangerous or unsafe through any neglect on the part of the defendant;

¶ 3. Assumption of risk incident to employment, see note to Chesapeake & O. R. Co. v. Hennessey, 38 C. C. A. 314.

¶ 4. See Master and Servant, vol. 34, Cent. Dig. § 393.

Digitized by Google

denied that a large mass of earth, ore, or rock fell from the roof of the stope and injured the plaintiff. And for a further defense to the action the defendant alleged, among other things, that at the time and place therein stated the plaintiff was in the employ of the defendant as a miner, and was then operating a drill, and that one J. M. Davy was the shift boss of the men engaged in the work, and was a fellow servant of the plaintiff; that the face of the stope runs about two feet in advance of the timbers which were placed in the excavation to support the roof and walls, and that the machine that the plaintiff was using was placed under the timbers, which the defendant had caused to be placed there as fast as could be done in advancing the work; that the said place was perfectly safe and secure, and that no loose rock existed in the roof or walls; that the plaintiff had been directed to put his drill against the upper face of the stope, in solid rock, so as to make a hole that would be of service in extending the stope; that lower down in the face there was some rock that had been loosened by previous work, which was intended to be barred down, and was not to be drilled; that the plaintiff, instead of doing as directed, and as a miner should have done, set his drill rod against said loosened rock, though admonished by his associate miners not to do so, and proceeded to drill into the same; that such drillwork had the effect of further loosening the rock, and finally to dislodge it, and that it fell towards the plaintiff, but without injury; that no rock whatever fell from the roof of the stope, and that the rock and débris that caused the alleged injury to the plaintiff was the result of his disobedience of the orders of the foreman, and in no respect was it the result of want of care on the part of the defendant, or of the foreman in charge; that the timbering in the stope at the time was sound, safe, and perfect; and that, if the plaintiff had exercised reasonable care, no accident could have occurred. It was further alleged that the plaintiff knew at the time of the alleged injury of the condition of said stope, and the danger, if any, and assumed the risk thereof. It was also alleged that the injury to plaintiff was not incurred by reason of the matters stated in the complaint, but in consequence of a fall which occurred to the plaintiff on his way home from the mine.

The plaintiff testified that at the time he was injured he was working in a chamber next to the top in the stope; that he was set to work in that chamber on the morning of the accident by John M. Davy, the shift boss or foreman. The plaintiff had worked the day previous two floors below in the stope, but on the morning of the accident the shift boss had set him to work in this particular chamber, and showed him where to drill. He testified that the rock in front of him was solid; that he knew the face where he was drilling was solid and good. To the left there were two sets of timbers out, and his testimony was to the effect that the rock that came down, and injured him came from this untimbered section.

W. E. Wear, a mucker, who was working about 15 feet from the plaintiff at the time of the accident, testified that he saw the shift boss when he came in that morning and told the plaintiff where to put in the holes. The shift boss pointed out the places where the plaintiff was to put in the holes. He testified further that the ground seemed to be in fair condition, as far as he noticed; that the plaintiff set up his machine, and went on drilling in the face of the stope; that at about 10 or half past 10 in the morning he heard some falling ground. He saw the ground coming down. He saw the plaintiff fall, and his light was knocked out, but his machine still kept running. After the accident the witness went up on the next floor, and found that ore had been worked back too far before timbers had been put in; that it was peculiarly dangerous, from the fact that there were no stulls or sprags running from the timbers up to hold the ground in case it should slough or become air-slaked; that there should have been a sprag or a short stull put up from the timbers to the ground, to steady and support it. It was the duty of the shift boss to see that it was done. It was no part of the duty of the machinemen to see whether it was done or not. The machinemen were not supposed to be working under that ground. The witness was questioned in his direct examination in respect to the work that was being done in this part of the mine at the time of the accident. The questions and

Digitized by Google

answers were as follows: "Q. In order to do that work in a proper way, should this ground up here have been inspected before a man was put in there? A. It should have been; yes, sir. Q. Whose duty was it to do that? A. It was the shift boss' duty. Q. If he had put these timbers in here, or this square set in here, that accident would not have happened to him? A. Oh, no; it could not have happened, because the rock could not have fallen. Q. In the absence of that, if they had put these sprags in, and held that up, that injury could not have happened? A. I don't think it could. Q. If this ore had not been worked out up here too close to there, would that probably have happened? A. No; because it would have rested over on these timbers. There would have been nothing to come down." This evidence tended to show that the accident was caused by rock falling from above and to the left of where the plaintiff was working, and from ground unsupported by timbers.

The testimony on the part of the defendant tended to show that the stope where the plaintiff was set to work was completely timbered; that there was no ground near to the plaintiff that was not timbered at the time he was hurt; that there was a crack in the breast of the stope upon which he was set to work; that above this crack the stope was solid, but, below it, it was shattered and had settled down; that the plaintiff started to drill below the crack in the loose, shattered ground; that a fellow workman told plaintiff he had better bar that ground down; that he did not follow this advice, and the loose ground came down and rolled over, falling from the face of the stope in front of the plaintiff. The defendant also introduced testimony tending to show that plaintiff was not seriously hurt, but continued his work during the day; that on the next day he admitted that in returning home he fell while coming down a hill, and hurt his leg over again.

The jury rendered a verdict in favor of the plaintiff, and assessed his damages at $9,000. A judgment having been entered upon the verdict, the case is brought here by the defendant upon a writ of error.

M. A. Folson and J. C. Moreland, for plaintiff in error.

Thomas O'Day and Robertson, Miller & Rosenhaupt, for defendant in error.

Before GILBERT, ROSS, and MORROW, Circuit Judges.

MORROW, Circuit Judge, after stating the case as above, delivered the opinion of the court.

It is assigned as error that at the close of the testimony the court refused to direct the jury to find a verdict for the defendant, and that the court refused to give the following instructions:

"(1) If the jury should find that the plaintiff was injured from rock falling from above, and caused by the negligence of the shift boss in not putting up timbers, then the plaintiff cannot recover.

"(2) The shift boss is and was the fellow servant with the plaintiff, and the plaintiff is not entitled to recover.

"(3) If the jury should find that the statement of plaintiff and his witness is true—that there was a space adjoining the place occupied by the plaintiff which was not covered, and the danger arising therefrom was known to the plaintiff—he cannot recover in this action.

"(4) The plaintiff, while working in the stope, had full knowledge of the danger of working where a roof was unprotected, and of the means employed to protect him therefrom; and, when he continued his work with such knowledge, he assumed the risk incident thereto, and cannot recover, if he was so injured."

There are other errors assigned, but the foregoing present the controlling questions at issue.

The main question of fact in controversy in this case was the locality from which the rock fell that injured the plaintiff. It was con-

Digitized by Google

tended by the plaintiff that it fell from the roof of the stope, and from a point that the defendant had neglected to timber as the ore was being removed. The defendant contended that it fell from the breast of the stope into which the plaintiff was drilling at the time of the injury. The pleadings and testimony presented this main question for the jury to determine. The allegations of the complaint and the testimony on the part of the plaintiff tended to establish the fact that the rock fell from the roof of the untimbered stope. The allegations of the answer and the testimony on the part of the defendant tended to establish the fact that the rock fell from the breast of the stope into which the plaintiff was drilling, and which had been loosened from the wall by the operation of plaintiff's drilling, and that the stope above was completely timbered.

As legal propositions in support of the plaintiff's case, it was contended that it was the duty of the master to provide a reasonably safe place in which the servant was required to work. As legal propositions in support of the defendant's case, it was contended with respect to the place in which the plaintiff was set to work, first, that the danger to the plaintiff was apparent, and he assumed the risk of the employment and contributed to the result; second, that the defendant was not charged with the duty of furnishing and keeping the place in a safe condition. This defense was submitted to the jury by the court in an instruction that clearly and distinctly directed a verdict for the defendant, if the jury believed the testimony on the part of the defendant. The court said in its instructions:

"If the injury to the plaintiff was caused by rock and other substances falling upon him from the drift in which he was working, and not from overhead, your verdict must be for the defendant."

This instruction was certainly as favorable to the defendant as any instructions could be, upon the defense set up in the answer, and the testimony introduced in support of that defense. In view of this positive instruction of the court, the jury must be presumed to have found as a fact that the rock fell from overhead, and not from the drift in which the plaintiff was working.

With respect to that feature of the case, the court instructed the jury that:

"It is the duty of the master to furnish the servant a reasonably safe place and appliances with which to work, and to make such reasonable inspection of such place and appliances as to not subject the servant to unusual risks or dangers. And if you find from the evidence in this case that the defendant knew that the ground was loose and liable to cave at or near the point described by the evidence, or by a reasonable inspection could have known, and you further find that the plaintiff did not know, and it was no part of the plaintiff's duty to make an inspection for the purpose of ascertaining, the condition of said place, and you further find that the plaintiff was set to work, and, while so working, rocks came down from the upper chamber above the plaintiff, and he was thereby injured, then I instruct you that your verdict must be for the plaintiff."

This instruction was qualified by the following instructions:

"Even though you should find from the evidence that the defendant was negligent in the matters complained of in the complaint, the plaintiff cannot recover, unless you further find that the plaintiff was himself free from con-

Digitized by Google

tributory negligence which contributed directly to the injury. Contributory negligence is the failure to exercise that degree of care and diligence which an ordinarily prudent man would exercise under similar circumstances or similarly situated."

"A servant not only assumes the risks ordinarily incident to his employment, but he also assumes such increased risks as he may knowingly and voluntarily undertake; and if the plaintiff went to work in a dangerous place, and the danger was apparent, or might have been discovered by the use of ordinary intelligence or inspection, then he assumed such risk when he undertook the work, and cannot recover."

"The master is not required to be present at the working place at all times, in person or by representative, to protect a laborer from the negligence of his fellow servant, or from his own negligence in the constantly changing conditions of the work."

There is no rule of law more firmly established than that it is the absolute duty of the master to provide a reasonably safe place in which the servant shall work, having regard to the kind of work, and the conditions under which it must necessarily be performed. Union Pac. Ry. Co. v. Jarvi, 69 Fed. 65, 3 C. C. A. 433; Western Coal Min. Co. v. Ingraham, 70 Fed. 219, 17 C. C. A. 71; Railroad Co. v. Baugh, 149 U. S. 368, 13 Sup. Ct. 914, 37 L. Ed. 772; Mather v. Rillston, 156 U. S. 391, 15 Sup. Ct. 464, 39 L. Ed. 464. If the jury believed the testimony on the part of the plaintiff, the safety of his employment depended upon the proper timbering of the stope above and immediately adjoining the place where he was set to work. He was not employed as a timberman, but as a miner and machineman, or driller. It was no more a part of his duty to inspect the timbering above him, or the condition of the rock in the chamber above, according to the custom in that mine, than it would have been to inspect the track on the tunnel floor, or the cars in which the ore was carried out. Other men were detailed for that part of the work. The shift boss, whose orders he was obliged to obey, indicated the place in which he was to work; directed the number of holes to be drilled in the breast of the tunnel, and that the blasts should be fired at noon. He entered upon the performance of his duties, and was warranted in the assumption that the necessary precautions had been taken by the defendant to prevent the caving and falling of rock from the stope above. As was said by the court in Railway Co. v. Jarvi, supra, in comparing the relative duties of master and servant:

"Of the master is required a care and diligence in the preparation and subsequent inspection of such a place as a room in a mine that is not, in the first instance, demanded of the servant. The former must watch, inspect, and care for the stopes through which and in which the servants work, as a person charged with the duty of keeping them reasonably safe would do. The latter has a right to presume, when directed to work in a particular place, that the master has performed his duty, and to proceed with his work in reliance upon this assumption, unless a reasonably prudent and intelligent man, in the performance of his work as a miner, would have learned facts from which he would have apprehended danger to himself."

While it is a ruling principle that a person entering voluntarily into a contract of hiring assumes all the risks and hazards ordinarily incident to the employment, and liable to arise from the defects which are patent and obvious to a person of his experience and understanding, it is equally true that risks arising out of the negligence of the master

Digitized by Google

are not those ordinarily incident to the employment, and are not, therefore, assumed by the servant. Texas, etc., R. R. Co. v. Archibald, 170 U. S. 665, 18 Sup. Ct. 777, 42 L. Ed. 1188. The risks inherent in work of the kind in which the defendant in error was engaged are well stated in Kelley v. Mining Co. (Mont.) 41 Pac. 273—a case wherein the plaintiff was suing for damages for injuries caused while working as a miner in drilling a tunnel. The court said:

"The plaintiff was employed at the time of the accident in running a tunnel in defendant's mine. He was doing this work under the immediate supervision and direction of John Sheehan, the foreman and manager of the mine. Sheehan was not working in the mine with plaintiff. The plaintiff was not engaged in creating a place on his own judgment and at his own risk. He assumed the risks naturally attendant upon driving the tunnel. It was the duty of defendant to keep that part of the tunnel or place already created safe, by whatever reasonable means were necessary. If the plaintiff had been injured while in the actual work of drilling or blasting in the face of the tunnel he was driving, he may have had no claim on the defendant for damages, for these were risks he assumed as a miner. But he did not assume the risk of defendant's failure to keep that part of the tunnel or place already created reasonably safe and secure. For instance, if a stone or material blasted or dug from the tunnel by plaintiff should have been blown against or should have fallen upon him, he would have had no remedy against defendant for any injury sustained thereby. This is a risk belonging to his employment, and which he assumed. But he did not, by his employment as a miner in driving the tunnel, assume the risk of the failure of the defendant to take such reasonable precautions as were requisite to prevent the caving and falling of the roof of that part of the tunnel already created, upon him, while engaged in his work. * * * He assumed the risks incident to the work in front of him, and not the risks of defendant's failure to properly care for that part of the tunnel or place behind him which he had completed and turned over to the care and control of the defendant."

In that case the injury occurred from the caving of rock behind the plaintiff, and because of the accumulation of rock and débris on the floor of the tunnel impeding his escape. In the present case the evidence on the part of the plaintiff tended to show that the rock fell from a place which was entirely under the control of the master, and which the servant was not bound to inspect. A defect apparent to one making a careful inspection of a stope in a mine might easily be unseen by a miner attending to his work as directed, and having only the aid of his candle to light up the walls of the tunnel or stope. It does not appear from the evidence that the defendant in error could have discovered that the roof of the stope was in danger of caving, without a particular inspection thereof, or that the timbering was insufficient to secure the loose rock above. It was not his duty to timber the mine, or to pay any attention to that work, unless it was obviously defective, in his understanding, in the immediate vicinity of his work. That duty belonged exclusively to the defendant, and the question whether or not it exercised reasonable care in its fulfillment was properly submitted to the jury.

With regard to the contention that the negligence, if any, causing the accident, was solely that of the shift boss, and, as he was a fellow servant of the plaintiff, the defendant was not liable for his negligence, we do not think the trial court erred in refusing to so instruct the jury. To support this contention would be to overlook the important principle that one cannot escape liability for neglect of a positive duty by dele-

Digitized by Google

gating that duty to another. It does not matter, in the present case, whether or not the shift boss be considered as the fellow servant of the plaintiff. The question is, did the defendant fail to perform its absolute duty to the plaintiff to provide a reasonably safe place in which he should perform the work given him to do? The Supreme Court of the United States, in the case of Northern Pac. R. R. Co. v. Peterson, 162 U. S. 346, 16 Sup. Ct. 843, 40 L. Ed. 994, has stated this doctrine very clearly and decisively. It is there said:

"The general rule is that those entering into the service of a common master become thereby engaged in a common service, and are fellow servants, and prima facie the common master is not liable for the negligence of one of his servants which has resulted in an injury to a fellow servant. There are, however, some duties which a master owes, as such, to a servant entering his employment. He owes the duty to provide such servant with a reasonably safe place to work in, having reference to the character of the employment in which the servant is engaged. He also owes the duty of providing reasonably safe tools, appliances, and machinery for the accomplishment of the work necessary to be done. He must exercise proper diligence in the employment of reasonably safe and competent men to perform their respective duties, and it has been held in many states that the master owes the further duty of adopting and promulgating safe and proper rules for the conduct of his business, including the government of the machinery and the running of trains on a railroad track. If the master be neglectful in any of these matters, it is a neglect of a duty which he personally owes to his employés, and, if the employé suffer damage on account thereof, the master is liable. If, instead of personally performing these obligations, the master engages another to do them for him, he is liable for the neglect of that other, which in such case is not the neglect of a fellow servant, no matter what his position as to other matters, but is the neglect of the master to do those things which it is the duty of the master to perform as such."

The question turns, therefore, "rather on the character of the act than on the relations of the employés to each other. If the act is one done in the discharge of some positive duty of the master to the servant, then negligence in the act is the negligence of the master." B. & O. R. R. v. Baugh, 149 U. S. 368, 386, 13 Sup. Ct. 914, 921, 37 L. Ed. 772.

We think the question of actionable negligence on the part of the defendant was submitted to the jury under the proper instructions. The judgment of the Circuit Court is affirmed.

NOTE.

Duty of Servant to Inspect Appliances and Places to Work.

I. In General.

1. Tools, Machinery, and Appliances.

[a] The duty of ascertaining whether machinery or appliances, with which a servant is to work, are kept in proper repair, is the duty of the master, and not of the servant.

—(Ill. 1890) Chicago & E. I. Ry. Co. v. Hines, 132 Ill. 161, 23 N. E. 1021, 22 Am. St. Rep. 515;

(S. C. 1882) Lasure v. Graniteville Mfg. Co., 18 S. C. 275.

[b] (Ill. 1895) In an action for damages occasioned by the death of a kinsman from negligence in failing to keep appliances in safe repair, an instruction which ignores the duty of the deceased to exercise reasonable dili-

Digitized by Google

gence to inform himself of the condition of such appliances is erroneous.—Illinois Cent. R. Co. v. Pummill, 58 Ill. App. 83.

[c] (Ill. 1898) A servant is not bound to investigate and test the fitness and safety of appliances furnished to him by his master.—Leonard v. Kinnare, 75 Ill. App. 145.

[d] (Ind. 1892) Plaintiff was in defendant's service as a blacksmith, and, while working with other employés at a railroad crossing, L., one of the other employés, told him to get a crowbar. Plaintiff got one which was worn at the point, and, in using it, the bar, by reason of its beveled point, slipped, and plaintiff was injured. There was no evidence that the officers of defendant had knowledge of the defect. *Held*, that as the defect was apparent, and plaintiff was not ordered to get that particular one, he was guilty of negligence in not noticing the defect, and that defendant was not liable.—McBride v. Indianapolis Frog & Switch Co., 5 Ind. App. 482, 32 N. E. 579.

[e] (Mass. 1898) Whatever be the custom in regard to inspection of poles on which electric light wires are strung, due care on the part of a lineman requires that, before going on one, he make an inspection for rot just below the surface of the ground, where its apparent age is such as to make it probable that it is not strong enough to sustain him.—McIsaac v. Northampton Electric Lighting Co., 51 N. E. 524, 172 Mass. 89, 70 Am. St. Rep. 244.

[f] (Ohio, 1895) Where an employé comes in to assist in unloading heavy stone while a stick is being used for that purpose for the first time, and takes hold in assisting to unload the stone, as it is his duty to do, he is not negligent in not investigating the strength of the stick.—Lake Shore & M. S. Ry. Co. v. Corcoran, 14 Ohio Cir. Ct. R. 377.

[g] (Tenn. 1883) A railroad laborer, who is furnished by his section master with an iron maul, known by the latter to be defective, and who is injured in consequence of such defect, can maintain an action against the railroad company, though the defect might have been discovered by the laborer on inspection.—Guthrie v. Louisville & N. R. Co., 79 Tenn. (11 Lea) 372, 47 Am. Rep. 286.

[h] (Tenn. 1902) An employé operating a machine, while not required to inspect it, is bound to see what an ordinarily careful and prudent operative would have seen of its condition.—Record v. Chickasaw Cooperage Co., 69 S. W. 334, 108 Tenn. 657.

[i] (Tex. 1886) An instruction that it was plaintiff's duty to see that the truck, whose defects caused his injury, was reasonably safe, and, if he failed to use reasonable care and inspection to ascertain its defects, and was hurt by reason of a defect which he could have discovered by such inspection, he could not recover; that the law imposed on him the duty of watchfulness and care to discover defects, whether or not he was specially directed by the company in regard thereto; and that, if the accident was due to a defect which he had an equal opportunity with the company to discover, he could not recover,—was improper as imposing on plaintiff more care than was required.—Missouri Pac. Ry. Co. v. Crenshaw, 71 Tex. 340, 9 S. W. 262.

[j] (Tex. 1900) It was not error to refuse to charge that plaintiff assumed all the risks from all defects in appliances used by him of which he might have known by the use of ordinary care, since a servant is not bound to use ordinary care to discover defects.—Missouri, K. & T. Ry. Co. of Texas v. Baker, 58 S. W. 964.

[k] (Wash. 1893) A sawyer was grossly negligent, and could not maintain an action against a mill owner for personal injuries occasioned by the breaking of a rope, which, by means of a pulley and weight, automatically drew a saw out of the way, when not in use, where he had been employed in the mill for 5½ months, had operated the saw for 3½ months, and had never examined the condition of the rope, though it was in plain sight of him.—Schulz v. Johnson, 7 Wash. 403, 35 Pac. 130.

[l] (Wis. 1896) Plaintiff was injured by the slipping of a pinch bar with which he was attempting to move an engine. He was a machinist of 20 years' experience, and knew that a bar would slip unless the heel was sharp, but did not examine the bar before using it, though the fact that it was defective was easily seen. *Held*, that his negligence precluded recovery.—Holt v. Chicago, M. & St. P. Ry. Co., 69 N. W. 352, 94 Wis. 596.

Digitized by Google

2. —— *Railroad Equipment.*

[a] (U. S. 1903) A charge upon the subject of the knowledge by a fireman of the absence of brakes on the engine on which he had ridden 50 or 60 miles is not erroneous, where it amounts solely to a direction to the jury that the man was bound to use his eyes, and if, by their use, he could see the defect, he was bound thereby, even though he had not observed it; but that he was not bound to make a careful examination of every part of an engine upon which he was fireman, in order to charge the railway company with negligence, or exonerate himself from the charge of contributory negligence. Judgment (1902) 114 Fed. 458, 52 C. C. A. 260, affirmed.—Choctaw, O. & G. R. Co. v. Holloway, 24 Sup. Ct. 102, 191 U. S. 334, 48 L. Ed. 207.

[b] (Ind. 1889) An instruction that, as a matter of law, decedent being at the time of injury a conductor, and not under immediate control of a superior, he was held to ordinary and reasonable care, not only in managing the train, but in inspecting the machinery, etc., was properly refused.—Cincinnati, H. & D. R. Co. v. McMullen, 117 Ind. 439, 20 N. E. 287, 10 Am. St. Rep. 67.

[c] (Ind. 1891) It is not the duty of a brakeman to know whether the brakes on the train on which he is working are in good condition, or to examine such brakes before using them.—Ohio & M. Ry. Co. v. Pearcy, 128 Ind. 197, 27 N. E. 479.

[d] (Ind. 1892) A railroad brakeman, who has no notice of danger, is not bound to use care and watchfulness to discover defects in the roadway and switches which are not so apparent as to be open to the observation of ordinarily prudent men.—Pennsylvania Co. v. McCormack, 131 Ind. 250, 30 N. E. 27.

[e] (Kan. 1883) Where a steam hand car, used by an employé to go from place to place in the performance of his duties, ran off the track, injuring such employé, he could not recover, in the absence of a showing of negligence on the part of the employer, or the existence of a defect in the car which he could not have discovered.—McQueen v. Central Branch U. P. Ry. Co., 30 Kan. 689, 1 Pac. 139.

[f] (Mich. 1887) A switchman who has been employed for a week about a switch engine which has a different kind of coupling at either end, and, having been coupling at one end, uses the other without examining it, and receives an injury to his hand by reason of assuming the coupling to be the same, and handling it as he did the other, is guilty of contributory negligence. —Goulin v. Canada Southern Bridge Co., 64 Mich. 190, 31 N. W. 44.

[g] (Minn. 1884) Without evidence of the fact, the conductor of a railway freight train is not presumed to be under the duty of inspecting the cars and machinery of his train, or chargeable with negligence in respect to a defect discernible upon inspection.—Ransier v. Minneapolis & St. L. Ry. Co., 32 Minn. 331, 20 N. W. 332.

[h] (N. Y. 1886) While a brakeman was required to know that there were frogs in switches, and to observe their form and mode of construction, so far as represented by the surface, he was not required to ascertain whether the appearance which they gave did or did not fairly represent the character of the less exposed portion of the structure, or the danger to which he might be exposed if his feet entered them, and to do that by experiment or close observation.—Appel v. Buffalo, N. Y. & P. R. R., 2 N. Y. St. Rep. 257.

[i] (S. C. 1903) It is not the duty of a railroad conductor to examine the cars turned over to him before taking them out on a train, where a car inspector is employed at the station by the railroad company.—Barksdale v. Charleston & W. C. Ry. Co., 44 S. E. 743, 66 S. C. 204.

[j] (Tex. 1892) In an action by a railroad employé for injuries caused by a defective coupling, a request by defendant to charge that if plaintiff knew, or by the exercise of ordinary care might have known, of any old crack in the casting of the coupling, and continued in defendant's employ, and such crack was the cause of the injury, he could not recover, was properly refused, as liable to mislead as to the care required of plaintiff, taken in connection with that required of defendant to furnish reasonably safe appliances, and because plaintiff was not required to inspect the coupling for latent defects.—Sabine & E. T. Ry. Co. v. Ewing, 1 Tex. Civ. App. 531, 21 S. W. 700.

Digitized by Google

[k] (Tex. 1901) Where a railway brakeman did not know of the defective condition of a switch, the fact that he might have gained such knowledge by inspecting it is no defense in an action for damages for his death, caused by such defect.—San Antonio & A. P. Ry. Co. v. Waller, 65 S. W. 210, 27 Tex. Civ. App. 44.

[l] (Tex. 1901) A locomotive engineer is not charged with the duty of inspecting his engine for dangerous defects, though furnished with tools to make repairs during trips.—San Antonio & A. P. Ry. Co. v. Lindsey, 65 S. W. 668, 27 Tex. Civ. App. 316.

[m] (Wis. 1878) An instruction asked by a railroad company, sued by a brakeman for injuries sustained while coupling cars, owing to an obvious defect which had existed for several years, that it was plaintiff's duty to observe and avoid any defect in the car if dangerous, and that he cannot recover, if he failed to do so, is properly refused, in the absence of evidence that plaintiff had charge of the car at the time of the injury, or was charged with the duty of inspecting it.—Wedgwood v. Chicago & N. W. Ry. Co., 44 Wis. 44.

3. Places to Work.

[a] (U. S. 1893) In an action for personal injuries suffered by plaintiff, a switchman, while coupling cars, the failure of defendant to keep the spaces between the ends of the ties properly filled was alleged as a cause of the injury. Plaintiff had been working five nights before the accident as night switchman in the yard where it occurred, which was a mile long and half a mile wide, and he testified that he did not know the condition of the track at the place of the accident. *Held*, that an instruction that plaintiff could not recover if he began or continued work with knowledge of the defect, and that he was bound to take notice of apparent defects, was sufficient, without a further charge that before taking service in the yard he was bound to inform himself of the condition of all the tracks.—Little Rock & M. R. Co. v. Moseley, 56 Fed. 1009, 6 C. C. A. 225, 12 U. S. App. 514.

[b] (Del. 1887) A carpenter, working on the roof of a building in process of construction, is not bound to inspect the condition of the walls, before undertaking the work.—Giles v. Diamond State Iron Co., 8 Atl. 368.

[c] (Ill. 1902) A servant is not required to make a critical and careful examination of his surroundings at the place where he is ordered to work.—Rock Island Sash & Door Works v. Pohlman, 99 Ill. App. 670.

[d] (Ill. 1903) Where a servant employed as a painter is directed by the master to use a certain scaffolding, it is not incumbent on the servant to inspect the scaffolding. Judgment (1902) 102 Ill. App. 141, affirmed.—Ehlen v. O'Donnell, 68 N. E. 766, 205 Ill. 38.

[e] (Ind. 1892) A driver of a car in a coal mine is not bound equally with his employer to inspect the roof of the passageway through which the car is driven, for the purpose of discovering dangerous defects.—Hancock v. Keene, 5 Ind. App. 408, 32 N. E. 329.

[f] (Ind. 1902) Plaintiff, an experienced carpenter, of mature years, weighing 160 pounds, and with good eyesight, was employed to put up the roof joists of a building, without anything being said as to what he should stand on in doing the work. When he commenced the work the ceiling joists, designed only to support laths and plaster, and no floor, being 2x6 inches, and 14 feet long, were set unbridged, and certain loose boards were lying thereon. Plaintiff stepped on a defective joist, having a knot traversing and severing the fiber, which broke, precipitating him to the floor below. *Held*, that the accident occurred by reason of plaintiff's own negligence in failing to examine the sufficiency of the joist.—Baxter v. Lusher, 65 N. E. 211, 159 Ind. 381.

[g] (Iowa, 1886) In an action by an employé against a railroad company for damages resulting from the giving way of certain steps leading up to a platform for loading coal, where the evidence shows that the steps were constantly used by him in his work, and they were not under the special care of any other employé except plaintiff and a fellow workman, plaintiff will be charged with negligence for not seeing that the steps were in order; and an instruction to the jury that if they found plaintiff was employed to handle coal at the coal house and platform, and nothing was said to him by his em-

Digitized by Google

ployer in regard to looking after the safety of the steps, then it was not a part of plaintiff's duty to see that the steps were kept in a reasonably safe condition, is error; and another instruction to the effect that plaintiff was bound to use ordinary care to avoid injury does not take the place of a proper instruction presenting the subject of plaintiff's duty to the jury.—Stroble v. Chicago, M. & St. P. Ry. Co., 70 Iowa, 555, 31 N. W. 63, 59 Am. Rep. 45.

[h] (Mass. 1903) An employé in a quarry, directed by his superintendent to mount on a large rock for the purpose of drilling thereon, was not bound to make a careful inspection of everything pertaining to the safety of the place. —Mahoney v. Bay State Pink Granite Co., 68 N. E. 234, 184 Mass. 287.

[i] (Mo. 1901) Plaintiff, an experienced telephone lineman, charged with the duty of inspecting the lines, climbed out on a rotten cross-arm, which broke, causing his fall. He made no previous test of the cross-arm, though familiar with the ways of doing so, and though the condition of the arm was concealed by paint. He did not have a safety belt, though linemen furnished their own appliances, and his fellow workman had one. He knew that cross-arms rot in from six months to ten years, and that none could tell how long a particular one would last, and he had worked on this cross-arm several months before. *Held*, that he was guilty of contributory negligence as a matter of law.—Roberts v. Missouri & K. Tel. Co., 66 S. W. 155, 166 Mo. 370.

[j] (Mo. 1902) Plaintiff, an employé, was engaged with other employés in piling binder platforms in a warehouse and on top of other similar platforms, the work being done by allowing the platforms to stand vertical, except that the lower end was projected a little beyond the top, to keep them from falling. He told his co-employés to put up the last platform in the same manner as former platforms, and then went to an adjoining room, and an employé placed the last platform in a vertical position without advancing the lower end, and it fell and injured plaintiff, when he returned to the room, while passing below where it was standing. The room was rather dark, and a glance would scarcely have disclosed the defective work. *Held*, that plaintiff was not guilty of contributory negligence as matter of law in failing to inspect the work before placing himself in a position where the platform might fall on him.—Adams v. McCormick Harvesting Mach. Co., 68 S. W. 1053, 95 Mo. App. 111.

[k] (N. Y. 1891) A servant may assume that his master's premises and appliances are safe, and need not actively inspect them.—Rigdon v. Alleghany Lumber Co., 59 Hun, 627, 13 N. Y. Supp. 871.

[l] (N. Y. 1892) Plaintiff's intestate was killed by falling from a telegraph pole, owing to a defective cross arm on which he leaned his weight. Defendant's inspectors were not required to climb each pole and examine the arms, and decedent had been an inspector, and knew the manner in which inspections were made. *Held*, that deceased was guilty of contributory negligence in failing to inspect the arm before using it.—Flood v. Western Union Tel. Co., 131 N. Y. 603, 30 N. E. 196.

[m] (N. Y. 1901) Plaintiff's intestate, an experienced molder employed by defendant, under the superintendent and foreman's direction, who were experienced molders, went to where they had arranged defective castings and started to fill holes with molten metal, when an explosion occurred, caused by rust and damp in the holes, injuring the intestate, who had never done such work before and did not know of the effect of rust or damp thereon. *Held*, that such evidence was sufficient to justify a finding that intestate was not negligent in not examining the holes before attempting to fill them.—Dyer v. Brown, 71 N. Y. Supp. 623, 64 App. Div. 89.

[n] (Ohio, 1900) Where a scaffold was firmly constructed in the first instance, but, through use or removal of certain boards by direction of defendant's foreman, it had become racked, insecure, and unsafe, a servant without knowledge of such defective condition cannot be charged with negligence in not investigating, even though he had an equal opportunity with the master to make an investigation and discover the defect and danger.—Strabler v. Toledo Bridge Co., 11 O. C. D. 87.

[o] (Pa. 1885) In placing a steam hammer in an iron works, it became necessary to place overhead a large beam of timber, extending from one stringer or joist to another, to support an exhaust pipe connected with the steam

Digitized by Google

hammer. By some oversight on the part of the employés of a manufacturer engaged to put in the steam hammer the beam was not fastened to its place. Plaintiff, an employé of the mill owner, was directed by his boss to work the steam hammer, and was told that he must see that everything was all right. He knew that the working of the steam hammer would have a tendency to jar the beam, so that if it was loose it would fall. Without making any examination, he started the hammer, and the beam was jarred from its place, and fell and injured him. *Held*, that plaintiff was guilty of contributory negligence, barring recovery for his injury.—Reading Iron Works v. Devine, 109 Pa. 246.

[p] (Tex. 1899) A servant is under no obligation to ascertain defects in the place furnished by the master for him to work in; he is only bound to exercise ordinary care in prosecuting his work there.—San Antonio & A. P. Ry. Co. v. Brooking, 51 S. W. 537.

[q] (Tex. 1903) A brakeman injured by striking a post in dangerous proximity to the track while he was riding on the side of a freight car in the course of his employment owed no duty to inspect the premises of the railroad company and discover the dangerous proximity of the post.—Galveston, H. & S. A. Ry. Co. v. Brown, 77 S. W. 832.

[r] (Wash. 1894) A workman in a lumber yard is not guilty of contributory negligence in not examining a lumber pile to see if it is properly constructed, so that he may safely work around it.—Zintek v. Stimson Mill Co., 9 Wash. 395, 37 Pac. 340.

II. Right to Rely on Care of Master.

1. Tools, Machinery, and Appliances.

[a] In the absence of notice to the contrary, a servant is entitled to assume that his master has exercised due care and skill in furnishing proper appliances for the work, and in keeping them safe.

—(Ind. 1894) Chicago & E. R. Co. v. Branyan, 10 Ind. App. 570, 37 N. E. 190;

(Iowa, 1873) Mildowney v. Illinois Cent. R. Co., 36 Iowa, 462;

(N. J. 1894) Nord Deutscher Lloyd S. S. Co. v. Ingebregsten, 57 N. J. Law (28 Vroom) 400, 31 Atl. 619, 51 Am. St. Rep. 604;

(Va. 1892) Norfolk & W. R. Co. v. Nunnally's Adm'r, 88 Va. 546, 14 S. E. 367; (1893) Richland's Iron Co. v. Elkins, 90 Va. 249, 17 S. E. 890.

[b] (Ill. 1899) The master is not liable for defects and dangers of which the servant is fully informed; but the servant is authorized to rely upon the acts of the master in this respect, and is under no primary obligation to investigate the fitness and safety of the machinery, in the absence of notice that there is something wrong in it.—Pioneer Cooperage Co. v. Romanowicz, 85 Ill. App. 407, judgment affirmed (1900) 57 N. E. 864, 186 Ill. 9.

[c] (Ill. 1900) A servant is not required to make a careful and critical examination of appliances furnished by the master before he uses them. He has the right to rely upon the performance by the master of his duty to furnish reasonably safe appliances for the use of his employés.—Alabaster Co. v. Lonergan, 90 Ill. App. 353.

[d] (Ill. 1900) An employer must exercise reasonable care to see that tools, appliances, and machinery are reasonably safe for the uses to which they are to be put; and employés using them cannot be held guilty of contributory negligence if they fail to examine them.—Morton v. Zwierzykowski, 91 Ill. App. 462.

[e] (Ill. 1901) The servant, in order to recover for an injury by reason of defects in appliances furnished by the master, need not establish the defect, and that the master had or should have had knowledge or notice, and that the servant did not know of the defect and had not equal means of knowing of it with the master, where the defect was one which the master should have discovered by such an inspection as the exercise of ordinary care requires, and the servant is so employed that he has the right to rely upon the duty of the master having been performed, without himself inspecting the scaffold.—McBeath v. Rawle, 93 Ill. App. 212.

[f] (Ind. 1894) Plaintiff was not negligent in standing in front of a revolving saw, which swung forward and struck him, owing to the breaking of the

Digitized by Google

rope which held it in place when not in use, he having a right to suppose that this was secure.—Heltonville Mfg. Co. v. Fields, 138 Ind. 58, 36 N. E. 529.

[g] (Ind. 1898) A complaint by a servant for injuries caused by the use of a defective tool furnished by the master need not aver that the servant carefully examined the tool before using it; since, when a master places an implement in the hands of the servant, he impliedly undertakes that it is sound and fit for the use intended, and that he will exercise ordinary care to keep it so.—Boyce v. Schroeder, 51 N. E. 376, 21 Ind. App. 28.

[h] (Ind. 1904) A servant is not required to search for latent defects, or to inspect appliances furnished to him for use, to discover whether there are latent imperfections in them, and he may assume the employer has discharged his duty.—Chicago, I. & L. Ry. Co. v. Tackett, 71 N. E. 524.

[i] (Mo. 1884) A servant injured because of a defect in machinery he is using is not guilty of contributory negligence, if, ignorant of its nature, he relies on an assurance of his employer that it is suitable for the work.—Malone v. Morton, 84 Mo. 436.

[j] (Mo. 1890) The servant has a right to assume that instruments furnished him by his employer are safe and sound, and he is under no obligation to inspect them before putting them into use in order to discover latent defects.—Banks v. Wabash Western Ry. Co., 40 Mo. App. 458.

[k] (Neb. 1898) No defect being obvious, an employé has the right to assume that a tool or appliance furnished him by his employer is reasonably safe and fit for the purpose for which he is required to use it.—Union Stock-Yards Co. v. Goodwin, 77 N. W. 357, 57 Neb. 138.

[l] (N. Y. 1893) In an action for personal injuries to a servant, caused by a defective machine, it appeared that the machine was known by all to be defective, and that the foreman ordered the engineer to fix it on the following Sunday. Plaintiff worked on the machine all the Monday following, when it appeared to be in good order. The accident happened on the next day. Plaintiff's regular occupation at the machine was not a dangerous one, but on the day of the accident he was ordered to take the place of a man who was absent, and while so engaged he was injured. Plaintiff testified that he thought the machine had been repaired. *Held*, that it was error to dismiss the complaint on the ground of contributory negligence, as plaintiff had a right to assume that the machine had been repaired on Sunday.—Schulz v. Rohe (Super. N. Y.) 4 Misc. Rep. 384, 24 N. Y. Supp. 118.

[m] (N. Y. 1899) An employé has a right to assume that an appliance furnished by the master is in proper repair, and in a reasonably safe condition for the performance of the work for which it is intended; and where he had been employed therewith but a short time, and knew that it had been used by others, the question of contributory negligence is for the jury.—Meehan v. Judson, 59 N. Y. Supp. 578, 43 App. Div. 46.

[n] (R. I. 1883) A workman employed to load, ride on, and unload an elevator is not necessarily negligent in assuming that the elevator is safe.—Mulvey v. Rhode Island Locomotive Works, 14 R. I. 204.

[o] (S. C. 1893) An instruction relating to defective appliances is not erroneous in allowing plaintiff to recover, "even though he may have been able to discover such defects by the use of ordinary care and diligence," as he had the right to assume, without inquiry or examination, that the appliances furnished him were safe.—Evans v. Chamberlain, 40 S. C. 104, 18 S. E. 213.

[p] (Tex. 1894) A servant has the right to assume without examination that a tool given him was safe for the purpose for which it was furnished, and he is only chargeable with negligence in using it where he knows it was unsafe, or was obviously so.—Dillingham v. Harden, 6 Tex. Civ. App. 474, 26 S. W. 914.

[q] (Tex. 1896) An employé is entitled to assume that the machinery furnished by his master is not defective, and therefore need not use diligence to discover latent defects.—Gulf, C. & S. F. R. Co. v. Kelly (Civ. App.) 34 S. W. 140.

[r] (Tex. 1898) An employé was injured by the falling of a hoisting block, used in raising a heavy timber, which was caused by its greasy condition. The employé knew of its condition previous to the accident, but the director of the work had undertaken to remove the grease, and the employé had no

Digitized by Google

notice of his failure to do so. *Held*, that he had a right to assume that the hoisting block had been put in reasonably safe condition before undertaking the work.—Terrell Compress Co. v. Arrington Co., 48 S. W. 59.

[s] (Tex. 1898) A servant is not required to use diligence to discover defects not obvious in appliances furnished him, but may assume that the master has discharged his duty in furnishing them.—Terrell Compress Co. v. Arrington, 48 S. W. 59.

[t] (Tex. 1899) Defendant having a servant whose duty it was to inspect ropes to water-tank valves, a fireman injured by the breaking of one of such ropes, which was rotten, was not required to inspect them for himself, but could presume, without investigation, that defendant had performed its duty in supplying and maintaining reasonably safe appliances.—International & G. N. R. Co. v. Elkins, 54 S. W. 931.

2. —— *Railroad and Street Railroad Equipment.*

[a] (Ark. 1895) In an action by an engineer for injuries caused by a defective engine, plaintiff testified that the pilot, which should have been only four inches from the track, was raised about seven inches above it. *Held*, that the alleged defect being, under ordinary circumstances, an obvious one, an instruction that plaintiff had a right to presume the engine to be in good condition, and that he was not bound to inspect the same for defects, was error.—Fordyce v. Edwards, 60 Ark. 438, 30 S. W. 758.

[b] (Ill. 1897) A brakeman need not look after dark for defects in a car which he has reason to believe has been inspected by the company on that day.—Lake Shore & M. S. Ry. Co. v. Ryan, 70 Ill. App. 45.

[c] (Minn. 1893) In the absence of notice of defects in the coupling apparatus of street cars, an employé of the street car company may assume that the latter had used due diligence to keep such appliances in good order and in a safe condition.—Delude v. St. Paul City Ry. Co., 55 Minn. 63, 56 N. W. 461.

[d] (N. Y. 1888) A brakeman was not guilty of contributory negligence, precluding recovery, in climbing onto a moving car loaded with lumber to stop it, where the brake was so covered with the lumber as to render it unmanageable, so that the car collided with another car, and pushed the lumber against him, since he had a right to rely on the brake being in proper shape for use.—Byrnes v. New York, L. E. & W. R. Co., 14 N. Y. St. Rep. 554.

[e] (Tex. 1904) A brakeman who was injured by reason of a defective handhold on a caboose was not required to inspect such handhold for the purpose of ascertaining its condition, but might assume that it was reasonably safe for him to use, in performing his duties with a reasonable degree of safety.—Missouri, K. & T. Ry. Co. v. Hoskins, 79 S. W. 369.

3. *Places to Work.*

[a] (U. S. 1894) A brakeman coupling a flat car is entitled to assume that it is properly loaded, but is nevertheless bound to use proper diligence to discover any negligent loading which renders the coupling dangerous, and then to desist from the effort, or employ some method of avoiding the danger.—Northern Pac. R. Co. v. Everett, 152 U. S. 107, 14 Sup. Ct. 474, 38 L. Ed. 373.

[b] (U. S. 1898) It is not contributory negligence for a railway employé, without actual or imputed knowledge of the condition of a side track, to act on the assumption that it is reasonably safe and suitable for use, and that the cars thereon are safely secured.—Continental Trust Co. v. Toledo, St. L. & K. C. R. Co., 87 Fed. 133, 32 C. C. A. 44.

[c] (Del. 1887) A servant, who goes upon the roof of a building to work thereon, has a right to assume that the employer has exercised due care and caution in the erection of the building, unless his attention is called to the contrary, without particular inquiry on his part.—Diamond State Iron Co. v. Giles, 7 Houst. 557, 11 Atl. 189.

[d] (Ill. 1891) Plaintiff contracted by the month to wash the windows of defendant's building. He commenced on the lower floors, and, before starting to wash those on the upper floor, asked defendant's manager about them, and was told that they were "all right." While standing on the window sill holding on the sash, it pulled from its fastenings, and he fell, and was injured. *Held*, that defendant was not an insurer of the condition of the

Digitized by Google

building; that plaintiff had no right to rely upon the representation of defendant's manager, having himself better means of knowledge; and, in the absence of evidence of knowledge by defendant or its manager of the condition of the window, plaintiff could not recover.—Chicago Consol. Bottling Co. v. Mitton, 41 Ill. App. 154.

[e] (Ill. 1897) An employé, receiving injury through a patent defect in the construction of a scaffold furnished by the master for him to work on, may recover therefor, without its affirmatively appearing that he did not know of the defect, or have equal means of knowledge with the master; he having the right to assume, in the absence of actual knowledge to the contrary, that the master had discharged his duty. Judgment (1896) 67 Ill. App. 618, affirmed.—Chicago & A. R. Co. v. Maroney, 48 N. E. 953, 170 Ill. 520, 62 Am. St. Rep. 396.

[f] (Ill. 1900) An employer being charged with the duty of exercising reasonable care in seeing that the place where an employé is set to work is reasonably safe, the employé has the right to rely upon the performance of that duty, and he is not required to make a critical examination of his surroundings at the place where he is set to work, to see if it is safe. Judgment (1899) 86 Ill. App. 144, affirmed.—Ross v. Shanley, 56 N. E. 1105, 185 Ill. 390.

[g] (Ind. 1895) A coal miner has the right to assume, in the absence of apparent defects, that a room in which he is ordered to work by the mine boss is safe, and he is not bound to inspect it for the purpose of discovering latent defects.—Island Coal Co. v. Risher, 13 Ind. App. 98, 40 N. E. 158.

[h] (Ind. 1895) Where a day laborer, working under the order of a street commissioner, was directed by him to go to work about a bent in a trench, he was not bound, before obeying, to make a special examination or critical investigation, to see whether it had been negligently raised, or was then in an unsafe position, but could assume that the commissioner would not expose him to unnecessary peril.—City of Lebanon v. McCoy, 12 Ind. App. 500, 40 N. E. 700.

[i] (Ind. 1898) A servant, whose duties called him into a scrap bin, where sheet iron was so piled as to be liable to fall, was not bound to carefully examine it, to see that it was not dangerous, but only to exercise ordinary care to avoid apparent dangers, relying on the master's duty to keep the place in a reasonably safe condition.—Baltimore & O. S. W. Ry. Co. v. Spaulding. 52 N. E. 410, 21 Ind. App. 323.

[j] (Iowa, 1897) One whose duty it is to ride a "trip" through the main "entry" of a coal mine, for the purpose of signaling the engineer to cut off power in case any of the cars run off the track, is not bound to look after the safety of the entry, since it is an instrumentality furnished for the doing of his work, and the furnishing of it is not a part of such work.—Corson v. Coal Hill Coal Co., 70 N. W. 185, 100 Iowa, 224.

[k] (Kan. 1897) One working on a scaffold has a right to rely on the construction of a safe support therefor by the foreman and the men under him without examining it himself.—Kelley v. Union Pac. Ry. Co., 48 Pac. 843, 58 Kan. 161.

[l] (Me. 1900) Plaintiff was a fireman, employed in defendant's boiler room. A hole had been dug in the floor in preparing a foundation for a piece of machinery, and left partly covered, but in an insecure and dangerous condition. *Held*, that plaintiff had a right to rely on the general appearance of safety, and the presumption that his employer had provided him a safe place in which to work, and was not bound to critically examine the hole before stepping on the covering.—Frye v. Bath Gas & Electric Co., 46 Atl. 804, 94 Me. 17.

[m] (N. Y. 1896) An employé sent to trim electric lamps at a time when the wire connected with them is usually "dead," and who knows that they are never trimmed while on "live" wires, has a right to assume that the wire will not become alive through the negligence of the company.—Harroun v. Brush Electric Light Co. (Sup.) 42 N. Y. Supp. 716, 12 App. Div. 126.

[n] (Ohio, 1900) A servant who proceeds with reasonable care to enter and remain on a scaffold in the prosecution of his work has the right to assume that the master has performed his duty in providing and maintaining a safe place, and is not required to investigate to determine whether the scaffold is safe.—Strabler v. Toledo Bridge Co., 11 O. C. D. 87.

Digitized by Google

[o] (Pa. 1893) In an action for personal injuries, it appeared that defendant was engaged in widening the entrance to its mine by digging out the sides, and placing roof timbers and supports about six feet apart. After such supports were placed, the loose coal and slate between them were, under the supervision of defendant's superintendent, knocked down, and left to be carried out by the cleaning gang, which followed some 50 feet behind. Plaintiff, a workman in the cleaning gang, was injured by loose stone falling from the top. *Held*, that it was proper to refuse an instruction that if plaintiff could have seen, by looking, that there was imminent danger of the stone falling, and he did not look, it would prevent his recovery, since he had the right to presume that the entrance had been made safe.—Vanesse v. Catsburg Coal Co., 159 Pa. 403, 28 Atl. 200, 33 Wkly. Notes Cas. 387.

[p] (Tenn. 1889) In an action for injuries sustained by plaintiff by the breaking of a telephone pole on which he was sent to work, where it is a disputed question whether plaintiff was or was not the employé whose duty it was to serve as inspector for defendant telephone company, it is error to charge that "plaintiff had a right to assume that the pole upon which he was ordered to work * * * was safe and suitable," and that it was not his duty "to inspect the pole."—Cumberland Tel. Co. v. Loomis, 87 Tenn. (3 Pickle) 504, 11 S. W. 356.

III. Opportunity to Make Inspection and Remedy Defects.

[a] (U. S. 1900) Plaintiff was night foreman in the switchyards of defendant railroad company. About 10 o'clock at night certain flat cars of another road arrived in the yards, and were inspected by the regular inspectors, after which plaintiff had an engine attached thereto and started to move them. After they had started and were moving slowly, he observed that a brake was set on one car, and, climbing on the next car, he started to step from one to the other; reaching forward and taking hold of the brake wheel as he did so. The nut was gone from the top of the brake rod, and the wheel came off, causing him to fall between the cars, and he was run over and his arm crushed. *Held*, that he could not be said, as a matter of law, to have been guilty of contributory negligence in failing to examine the brake, under the circumstances, because of lack of opportunity to make the examination.—New Orleans & N. E. R. Co. v. Clements, 100 Fed. 415, 40 C. C. A. 465.

[b] (Cal. 1896) An employé working in a trench, in excavating, is not precluded from recovering for injury from the falling of a bucket from the steam shovel because a pin had not been made secure by a key, though one outside the trench could have seen that the key had not been put in; he having been hurriedly put into the trench, without opportunity to examine the shovel, and having a right to rely on the machine being all right.—Higgins v. Williams, 45 Pac. 1041, 114 Cal. 176.

[c] (Ill. 1894) A helper in a switch yard, whose duty is to catch and couple cars in the yard, and who, in the exercise of that duty, goes upon a car at night, just after it has been inspected, and who is killed by reason of a defect in the brake, is not guilty of contributory negligence for failing to inspect the brake before using it, since he has not the same opportunity of inspection as a brakeman.—Chicago & E. I. R. Co. v. Kneirim, 152 Ill. 458, 39 N. E. 324, 43 Am. St. Rep. 285, affirming (1892) 48 Ill. App. 243.

[d] (Ind. 1898) Where a servant is injured through using defective appliances furnished by his master, he need not show, in order to entitle him to recover, that he had not the same means as defendant of knowing of the defect, as he is not bound to make a critical examination of such appliances for the purpose of discovering defects not obvious.—Indiana Natural & Illuminating Gas Co. v. Marshall, 52 N. E. 232, 22 Ind. App. 121.

[e] (N. Y. 1899) A rule of a railroad company, known to its brakeman, requiring him to examine and know for himself that the appliances used by him are safe, does not preclude him from recovering for an injury caused by a defective appliance, of which he was ignorant, where he had no opportunity to examine the appliance before he used it.—Myers v. Erie R. Co., 60 N. Y. Supp. 422, 44 App. Div. 11.

Digitized by Google

[f] (N. C. 1899) A brakeman is not guilty of contributory negligence in stepping on a defective stirrup while mounting a car in motion, without first inspecting it, where his duties required him to mount the car without opportunity to inspect the stirrup, and where the defect was not palpably apparent. —Leak v. Carolina Cent. R. Co., 32 S. E. 884, 124 N. C. 455.

IV. SCOPE OF EMPLOYMENT.

[a] (Ill. 1897) A tower man whose duty it is to operate gates at a railroad crossing may rely upon the company and its servants performing their duty with due care, and is not obliged to inspect the company's property, except such as is connected with the performance of his own duty. Judgment (1896) 67 Ill. App. 155, affirmed.—Lake Shore & M. S. Ry. Co. v. Conway, 48 N. E. 483, 169 Ill. 505.

[b] (Ky. 1897) A servant who was primarily employed as track layer in the entry of a mine, and who was not charged with the special duty of looking after the safety of the roof of the entry, had a right to presume that the master had inspected and knew that the roof from which coal had been recently removed was reasonably safe.—Ashland Coal, Iron & Railway Co. v. Wallace's Adm'r, 42 S. W. 744, 101 Ky. 626.

[c] (Mich. 1879) A servant employed to operate a particular part of certain machinery is not bound, before beginning work, to make himself familiar with all the machinery and the dangers he may incur in case he comes in contact therewith; but it is sufficient if, upon entering into the active discharge of the duties assigned him, he ascertains what he is expected to do, and the dangers connected directly therewith.—Swoboda v. Ward, 40 Mich. 420.

[d] (Mo. 1885) A servant, while using the appliances furnished by the master, must take notice of those dangers and defects of which he has knowledge, and which are obvious to his senses; but he is not bound to investigate for himself a department of the work with which he has nothing to do, to determine the safety of such appliances.—Waldhier v. Hannibal & St. J. R. Co., 87 Mo. 37; Devlin v. Wabash, St. L. & P. Ry. Co., Id. 545.

[e] (Mo. 1894) In an action for the death of plaintiff's husband through defects in a scaffold, it appeared that deceased was directed to select the materials for the scaffold from a body of miscellaneous lumber. *Held*, that an instruction that, unless such selection was in the usual course of his employment, he need not examine the lumber, but might presume that it was sufficient, was erroneous.—Boettger v. Scherpe & Koken Architectural Iron Co., 124 Mo. 87, 27 S. W. 466.

[f] (N. J. 1899) A millwright employed in a mill is not, simply from his employment as such, under the duty of inspecting the machinery.—Cole v. Warren Mfg. Co., 44 Atl. 647, 63 N. J. Law, 626.

[g] (N. Y. 1887) Where a servant was acting in the place of another servant, whose duty it was to inspect appliances before using them, the former was guilty of contributory negligence, barring a recovery for injuries, in failing to make such inspection.—Lee v. Barrow S. S. Co., 6 N. Y. St. Rep. 285.

[h] (Tex. 1900) A brakeman on a freight train is not required to inspect the drawhead fastenings of the cars; hence a failure to do so will not prevent him from recovering for an injury caused by the pulling out of the drawhead stem.—Missouri, K. & T. Ry. Co. of Texas v. Cox, 55 S. W. 354, rehearing denied (Civ. App. 1900) 56 S. W. 97.

V. RULES OF EMPLOYER.

[a] (U. S. 1891) Where one of the rules of the company, which formed a part of the switchman's contract of employment, required him to inspect and take notice of the style of drawheads, etc., used in coupling engines and cars, and he alone directed the movements of the engine towards the car to be coupled to it, an injury resulting to him from their sudden coming together, on account of the drawhead being too short, must be due to contributory negligence which will defeat his recovery.—Brooks v. Northern Pac. R. Co. (C. C.) 47 Fed. 687.

[b] (U. S. 1898) A brakeman having access to the reasonable rules of a railroad company, requiring him to inspect the links and drawheads of the

Digitized by Google

cars making up a train on which he is employed, cannot recover for an injury resulting from a defective link, discoverable by a proper inspection.—Alabama G. S. R. Co. v. Carroll, 84 Fed. 772, 28 C. C. A. 207.

[c] (U. S. 1901) By a rule of a railroad company conductors of freight trains were required to be at the starting points of their trains at least 40 minutes before leaving time, and, among other things, to see that their cars were in proper running order before starting. It was shown that the other duties imposed upon the conductors during such time were such as to require the greater portion of it. *Held* that, under a reasonable construction, the rule did not require a conductor to critically examine the several cars in his train, and the attachments thereto, with the particularity which measured the duty of the company itself, but only that he should take a general survey of the train, and take notice whether, to all appearances, the cars were in proper order, and remedy any defect discovered; and that the fact that the end of a brake beam on a car was down, dragging on the track, before the train had cleared the yards at a considerable distance from the starting station, was not sufficient to charge the conductor with negligence as matter of law.—Baltimore & O. R. Co. v. Burris, 111 Fed. 882, 50 C. C. A. 48.

[d] (Ala. 1893) A brakeman in the employ of a railroad company is bound to comply with rules of the company requiring him to examine all cars which he is about to use, and to see that they are safe to be handled, and not to handle them unless they are safe, and if he fails to observe such rules with such care as may be consistent with the opportunities afforded while attending to his other duties, he is guilty of contributory negligence, barring recovery, for injuries arising from such failure.—Louisville & N. R. Co. v. Pearson, 97 Ala. 211, 12 South. 176.

[e] (Ala. 1899) A switchman may assume that a yardmaster has done his duty in removing obstructions, though the rules of his employment require him to see to it that the premises on which he is working are in proper condition for the services required; and his failure to observe an obstruction near the track, which caused him to fall from the footboard of a moving engine, causing his death, is not, as a matter of law, contributory negligence, precluding a recovery.—Louisville & N. R. Co. v. Bouldin, 25 South. 903, 121 Ala. 197.

[f] (Conn. 1897) A lineman in the employ of a telephone company cannot recover for an injury caused by the fall of a pole on which he was at work, notwithstanding a prior statement by the foreman that he had been up the pole, and that it was safe, where plaintiff knew that it was the rule and custom for each lineman to test the pole for himself, and that suitable appliances were at hand for making such test, and for securing the pole in case the lineman doubted its safety.—McGorty v. Southern New England Tel. Co., 38 Atl. 359, 69 Conn. 635, 61 Am. St. Rep. 62.

[g] (Ill. 1894) A notice to employés of a railroad company, requiring them to know whether the cars are in a safe condition, does not impose any additional duty on them as regards inspection of the car, or as to the use of reasonable care to inform themselves as to its condition.—Mobile & O. R. R. Co. v. Harmes, 52 Ill. App. 649.

[h] (Ind. 1892) Where, by the rules of defendant company, known to plaintiff, the duty of inspecting foreign cars was cast upon him, he cannot recover for injuries caused simply by a failure to make the inspection.—Ft. Wayne, C. & L. R. Co. v. Gruff, 132 Ind. 13, 31 N. E. 460.

[i] (Ind. 1900) Where, under a rule furnished by a railroad to its brakeman, he was required to examine and ascertain that the hand rails on cars were in proper condition for use, it was error, in an action by him for injuries caused by an insecure hand rail, to instruct the jury that he had a right to presume that the railroad had used reasonable care to furnish reasonably safe appliances, since such rule was reasonable, and constituted an element of the contract of hiring, disregard of which precluded recovery unless obedience thereto would have augmented the danger or been impracticable.—Terre Haute & I. R. Co. v. Pruitt, 57 N. E. 949, 25 Ind. App. 227.

[j] (Ky. 1886) A conductor, who fails to inform himself as to the condition of the cars in his train, before moving it, according to the rules of the company, cannot recover for injuries caused by a defective brake.—Alexander v. Louisville & N. R. Co., 83 Ky. 589.

Digitized by Google

[k] (Mich. 1889) Plaintiff, an experienced head brakeman, was ordered to get a car from a side track. He testified that he noticed, as the engine approached in accordance with his signal, that the drawbar of the car had fallen, and was too low; that he tried to lift the bar with his knee, and, failing to lift it high enough, its edge slipped on the edge of the drawbar of the car attached to the engine, and his hand was caught and crushed; and that, if he had looked before the cars came together, he could have seen the defect, and stepped out, but as it was he had time only to make the coupling as well as he could. He had a lantern on his right arm, and made the coupling with his left hand. The company had given him a printed order that each employé, before exposing himself to danger, must examine all machinery, cars, etc., satisfying himself that they are safe, and that he should take sufficient time for such examination, and should refuse to obey orders exposing himself to danger. Plaintiff was acting under no orders as to the manner or time of coupling. *Held*, that he could not recover for the injury.—Karrer v. Detroit, G. H. & M. Ry. Co., 76 Mich. 400, 43 N. W. 370.

[l] (Mich. 1903) Plaintiff, a freight conductor, testified that before he started his train he tried the brakes at each end of the rear car in the usual manner, and that they worked properly. The brake chain, however, below the platform of the car had been broken and bound together with hay wire, and as plaintiff attempted to set the brake after the train had passed the station at which defendant maintained car inspectors and repairers, who inspected the car, the wire gave way, and plaintiff was thrown under the wheels of the train. *Held*, that a rule requiring conductors to know that their trains are provided with everything necessary to enable them to comply with the regulations of the road, and that there is a reliable brake on the rear car, did not require of plaintiff a more minute inspection than he had given the brake in question.—McDonald v. Michigan Cent. R. Co., 93 N. W. 1041, 132 Mich. 372, 9 Detroit Leg. N. 700.

[m] (N. Y. 1898) A rule of a street railway company provided that "drivers must examine the feet of horses before starting. They will also examine the harness." *Held*, that the examination contemplated was not a thorough inspection, but such a general examination as the time given for the purpose would allow; and that, where a driver was killed by reason of the breaking of a hamestrap, the question as to his negligence in examining the harness was properly submitted to the jury.—McKnight v. Brooklyn Heights R. Co., 51 N. Y. Supp. 738, 23 Misc. Rep. 527.

[n] (Tex. 1900) In an action by personal representatives of deceased for damages for his death, caused by the derailment of a locomotive of which he was engineer, and claimed by plaintiff to have been due to insufficient track and defective construction of the engine, it was not error to refuse to instruct that under the rules of the company it was the duty of the deceased to have inspected the engine before using it, since the rules of the company upon which the instruction was predicated had no reference to defects in the mechanical construction of an engine.—Galveston, H. & S. A. Ry. Co. v. Smith, 57 S. W. 999, 24 Tex. Civ. App. 127.

[o] (Tex. 1902) Where a rule adopted by a railroad company in terms requiring engineers to inspect their locomotives before starting on a run was generally, if not universally, disregarded, it was not negligence on the part of an engineer, as between himself and the company, to start out without making such inspection.—Galveston, H. & S. A. Ry. Co. v. Collins, 71 S. W. 560, 31 Tex. Civ. App. 70.

[p] (Va. 1893) Conductors of freight trains, who are required by the rules of the company to inspect all cars which they pick up in transit, cannot maintain actions for injuries caused by their failure to do so.—Richmond & D. R. Co. v. Dudley, 90 Va. 304, 18 S. E. 274.

[q] (W. Va. 1893) Where a brakeman knows of a rule of the company requiring him to examine all brakes before using them, and, if out of order, either to fix them or report the defect, and also knows that a nut used to hold a brake wheel on the standard was off, but, without putting it in proper condition or reporting it, unnecessarily uses the brake, and is injured, he cannot recover.—Beall v. Pittsburgh, C. & St. L. Ry. Co., 38 W. Va. 525, 18 S. E. 729.

Digitized by Google

VI. Inspection as a Part of Employé's Ordinary Duties.

1. In General.

[a] (Ill. 1901) The duty of inspection may be cast on the servant by special contract, or by general rules or special orders brought home to his notice, and giving him reasonable opportunity for compliance; and to the extent to which such investigation is within his reasonable capacity, where such duty has been assumed by the servant and he has been negligent in its performance, in consequence of which he is injured, for such injury he cannot recover.—Chicago & A. R. Co. v. Merriman, 95 Ill. App. 628.

[b] (N. Y. 1887) Where it is the duty of a servant to inspect materials before putting them into use, his failure to make such inspection is contributory negligence, barring recovery for injuries received in the use thereof.—Lee v. Barrow S. S. Co., 6 N. Y. St. Rep. 285.

[c] (Tex. 1902) A master seeking to excuse himself from liability for failing to inspect his property, which results in the injury of his servant, must show that the duty of such inspection was one of the primary objects of the servant's employment.—Dupree v. Alexander, 68 S. W. 739, 29 Tex. Civ. App. 31.

2. Tools, Machinery, and Appliances.

[a] (U. S. 1895) If an employé, injured by the breaking of a rope in a rigging appliance, had at the time charge of all the rigging, ropes, and tackles of his employer, and was charged with the duty of inspecting them, and he selected the rope and tackle used at the time of the accident, he cannot recover for his injuries.—Erskine v. Chino Val. Beet Sugar Co. (C. C.) 71 Fed. 270.

[b] (Ala. 1890) It being the duty of the employer to furnish and maintain suitable appliances, an employé has the right to presume, in the absence of notice to the contrary, that the employer has complied with his duty, and to act on this presumption, unless the character of the employment is such as to devolve on the employé the duty of examining and seeing that the particular appliances are in proper condition.—Louisville & N. R. Co. v. Orr, 91 Ala. 548, 8 South. 360.

[c] (Ill. 1901) Where the duty to inspect appliances is delegated by the master to the servant as a part of his service, his duty is greater by reason of such delegation than the duty resting on him as a matter of care for his own personal safety.—Illinois Cent. R. Co. v. Barslow, 94 Ill. App. 206.

[d] (Ill. 1901) When it is made the duty of an employé to examine the couplings, wheels, journals, etc., and brakes of cars in his train, and he fails to perform that duty, he cannot by his failure to impose a liability on his employer for injuries to himself.—Illinois Cent. R. Co. v. Barslow, 94 Ill. App. 206.

[e] (Ky. 1896) A freight conductor, though required to examine the condition of a train before taking charge of it, was not guilty of contributory negligence in failing to discover that a bolt which held the round of a car ladder was so rusted and worn that the top would slip off when he grasped the round.—Illinois Cent. R. Co. v. Hilliard, 37 S. W. 75, 99 Ky. 684.

[f] (Neb. 1904) Where from the nature of the work the duty to make inspection and discover defects in the appliances devolves on the employé, the employer is not liable for a defect which the latter by reasonable inspection would have discovered. Judgment, New Omaha Thomson-Houston Electric Light Co. v. Rombold (1903) 93 N. W. 966, reversed on rehearing.—New Omaha Thompson-Houston Electric Light Co. v. Rombold, 97 N. W. 1030.

[g] (N. Y. 1892) Plaintiff's testator, a brakeman in charge of certain freight cars in the yards of defendant railroad, was charged with the special duty of examining such cars to see that they were in good order, and, if found imperfect, not to use them, but to send them to the shop for repairs. In negligent disregard of his duty he used an imperfect car, and was injured. *Held*, that plaintiff could not recover.—Shields v. New York Cent. & H. R. R. Co., 133 N. Y. 557, 30 N. E. 596, reversing (1891) 60 Hun, 586, 15 N. Y. Supp. 613.

Digitized by Google

[h] (N. Y. 1900) Plaintiff's intestate was injured by the breaking of a derrick used at a quarry while in defendant's employ. He stood at the top of the quarry, watched for signals from below, and gave them to the engineer, oiled the derrick, and directed the disposition of slack from the quarry. The superintendent, when he set deceased at work, directed him how to care for the derrick, and said he would hold him responsible for its proper care. The superintendent inspected the derrick four months before the accident, saw it every day, glanced up and down the mast, looked at the cap at the top, looked at the action of the guys to see that they were right and that the anchorages were sound, it being his duty to supervise such things. *Held*, that the duty of testing the mast to ascertain its interior condition and determining its reasonable safety had not been transferred from defendant to deceased.—Jarvis v. Northern New York Marble Co., 67 N. Y. Supp. 78, 55 App. Div. 272.

[i] (Ohio, 1856) The conductor of a train must use ordinary skill and judgment, not only in the management of the train, but also in the inspection of the machinery and cars, and if he suffers any injury through want of such inspection of the machinery and cars, or from an insufficiency which he might have known by reasonable diligence, or did know, the company will not be held liable.—Mad River & L. E. R. Co. v. Barber, 5 Ohio St. 541, 67 Am. Dec. 312.

[j] (Tex. 1893) Where there was a distinct issue made as to whether it was the duty or not of plaintiff to inspect the cars and brakes, it was proper, on request of defendant, to charge that if it was the duty of plaintiff to inspect the cars and brakes he could not recover for any defects in them which he might have discovered by inspection.—Gulf, C. & S. F. Ry. Co. v. Kizziah, 86 Tex. 81, 23 S. W. 578, reversing (1893) 4 Tex. Civ. App. 356, 22 S. W. 110, 26 S. W. 242.

[k] (Utah, 1896) A miner cannot recover for an injury occasioned by a defect in a car track which it was his duty to repair or report to the master, where he did not repair or report it.—Butte v. Pleasant Valley Coal Co., 47 Pac. 77, 14 Utah, 282.

[l] (Va. 1887) Where an employé is injured by reason of the alleged defective condition of the drawhead, and it appears that, shortly before the accident, he had uncoupled the same car, and that it was his duty to know of the defect, if it existed, and to report it, and to observe the cars and the couplings so as to determine, before attempting to couple them, what kind of a link to use, and by failing to observe the disparity in the height of the draw-heads he had used a straight link, he is guilty of contributory negligence.—Norfolk & W. R. Co. v. Emmert, 83 Va. 640, 3 S. E. 145.

[m] (Wash. 1898) A lineman in the employ of defendant, a telephone company, whose linemen acted as inspectors, cannot recover for an injury caused by the breaking of an insulator on a pole used in common by defendant and a street railway company, whereby a wire used by the latter to support its trolley wire became charged with electricity, and plaintiff, upon touching it, received a shock, causing him to fall to the ground, when he could have discovered it was so charged by testing it with apparatus he had with him.—Anderson v. Inland Telephone & Telegraph Co., 53 Pac. 657, 19 Wash. 575, 41 L. R. A. 410.

3. Places to Work.

[n] (Ill. 1892) Rev. St. c. 93, § 16, provides that operators of coal mines "shall keep a supply of timber constantly on hand * * * to be used as props and cap pieces, * * * so that the workmen may at all times be able to secure said workings for their own safety." *Held*, that such statute implies that, where no timberman is employed, it is the duty of miners, and a part of their employment, to observe the roof under which they are working, and to set props wherever they appear to be needed.—Consolidated Coal Co. of St. Louis v. Scheller, 42 Ill. App. 619.

Digitized by Google

(131 Fed. 401.)

JAMES v. GRAY. In re JAMES et al. Ex parte JAMES.

(Circuit Court of Appeals, First Circuit. July 6, 1904.)

No. 494.

1. BANKRUPTCY—PROVABLE DEBTS—LOAN BY WIFE TO HUSBAND.

A loan made by a wife to her husband from her separate estate is provable as a debt against his estate in bankruptcy without regard to its enforceability under the law of the state, the contract being valid in equity, by the principles of which courts of bankruptcy are governed; and there is no distinction in such respect between an estate to the wife's separate use, as known to the chancery courts, and a separate estate created by statute.

Aldrich, District Judge, dissenting.

Appeal from the District Court of the United States for the District of Massachusetts.

Joseph H. Beale (Beale, Hutchings & Beale, on the brief), for appellant.

Lee M. Friedman (Morse & Friedman, on the brief), for appellee.

Before COLT and PUTNAM, Circuit Judges, and ALDRICH, District Judge.

PUTNAM, Circuit Judge. This is a case of a bankrupt partnership. Proof of a claim of $20,469.46 for money loaned the partnership was offered by the wife of one of the bankrupt partners, and rejected by the District Court on the strength of In re Talbot, 110 Fed. 924. In re Talbot rested on Woodward v. Spurr, 141 Mass. 283, 6 N. E. 521, and Bank v. Tyndale, 176 Mass. 547, 57 N. E. 1022, 51 L. R. A. 447. The District Court also made reference to Clark v. Patterson, 158 Mass. 388, 33 N. E. 589, 35 Am. St. Rep. 498.

All the transactions were in Massachusetts, and all the parties are residents of that state. The common and statutory laws of Massachusetts relating to this loan are, as we will see, in harmony with the common-law text writers and authorities, so that, so far as they are concerned, the claim could not be allowed in either the federal or state courts, because, on the ground of the unity of the persons of the husband and wife, no contract could ever exist. Therefore, if we had no separate estate as known to the chancery courts, and no statutory separate estate, the decision of the District Court would necessarily be affirmed.

The case involves the statutes which were re-enacted in Rev. Laws Mass. 1902, c. 153, §§ 1, 2, as follows:

"Section 1. The real and personal property of a woman shall upon her marriage remain her separate property, and a married woman may receive, receipt for, hold, manage and dispose of property, real and personal, in the same manner as if she were sole. But no conveyance by a married woman of real property shall, except as provided in section 36, extinguish or impair her husband's tenancy by the curtesy by statute or his rights to curtesy which existed at the time this chapter takes effect in such property unless he joins in the conveyance or otherwise releases his said rights.

"Sec. 2. A married woman may make contracts, oral and written, sealed and unsealed, in the same manner as if she were sole, except that she shall not be authorized hereby to make contracts with her husband."

Digitized by Google

It will be observed that, unlike the statutes of many states, this legislation does not enlarge the common law so far as contracts between husband and wife are concerned. If any relief is found, it must be on equitable principles, treating the property vested in the wife under the statute as a separate estate in equity, or analogous thereto. The existing statutes in bankruptcy make no special provision in reference to claims of this character; but that full equitable principles are accepted by the courts in bankruptcy was determined by us in Batchelder & Lincoln Co. v. Whitmore, 122 Fed. 355, 58 C. C. A. 517, and in Franklin Chase et al., Petitioners, 124 Fed. 753, 59 C. C. A. 629. There can be no question that equitable claims, as, for instance, claims arising out of a breach of trust in the technical sense of the word "trust," are provable under Act July 1, 1898, c. 541, § 63, 30 Stat. 562, 563 [U. S. Comp. St. 1901, p. 3447]. They are to be regarded either as "unliquidated claims" or as claims founded "upon a contract, express or implied," because every trust involves such a contract. There never has been any question on this score in the United States, and in England the rule is the same. Williams' Bankruptcy Practice (7th Ed. 1898) at page 120, says:

> "A breach of trust, although it would afford a good ground for an action of tort for unliquidated damages, is always, even without express enactment, held to create a debt in equity."

The learned author makes this observation as part of his description of debts provable in bankruptcy. At pages 36 and 37 the learned author, speaking of the words describing provable debts in the act of 1869, "due at law and in equity," says:

> "These words do not appear in the present act, but it would not seem that the law has been changed by the omission of them."

In Ex parte Wells, 2 M., D. & De G. 504, the value of a legacy of stock, bequeathed to the wife's separate use, but transferred to the name of her husband, who sold it out and became bankrupt, was held provable. In Ex parte Greer, 2 D. & Ch. 113, it was decided that the income of an estate settled in trust for the wife might be used by the husband with her consent without creating a debt, yet the whole theory of the case was that, if the principal had been so used, it would create a debt provable in bankruptcy. These decisions are in all respects analogous, as they arise with reference to a claim of a married woman against her husband in connection with her separate estate.

It must be conceded that the decisions of the Supreme Judicial Court of Massachusetts, which have been referred to by the learned judge of the District Court, would, if they controlled this court, compel us to sustain his decree. Clark v. Patterson, 158 Mass. 388, 33 N. E. 589, 35 Am. St. Rep. 498, was a bill in equity, brought by a wife against a partnership of which her husband was a member, for relief with reference to a loan made to the partnership from her separate estate. The court held that relief could not be granted even in equity, stating, at page 391, 158 Mass., page 591, 33 N. E., 35 Am. St. Rep. 498, that the note was void as between the original parties, having been given to a wife by a partnership of which her husband was a member, and, with a citation of prior decisions of the same court, adds that equity does

Digitized by Google

not relieve in such a case. The reason for this decision appears in Woodward v. Spurr, 141 Mass. 283, 286, 6 N. E. 521, where it was held that, with reference to the rights of a wife having a separate estate against her husband with regard to that estate, relief, even in equity, will not be granted on an alleged debt strictly contractual, nor unless there are some elements of spoliation on the part of the husband, or elements raising a trust on his part, either express, implied, or resulting, or something analogous thereto.

We should also refer to the expressions of the then Chief Justice Gray, earlier than any decisions already referred to, found in Atlantic National Bank v. Tavener, 130 Mass. 407. This was in 1881, subsequent to the enactment of any statute the substance of which is found in the sections which we have cited from chapter 153 of the Revised Laws, which could possibly affect the case now before us. We shall have occasion to turn again to this case; but for the present, we notice only the fact, stated at page 409, that, while it had not then been determined in Massachusetts whether a loan by a wife to her husband from her separate property creates an equity in her favor, "it has generally, if not unanimously, been decided in the affirmative by other courts." That such is the general rule which the federal courts will apply in equity, notwithstanding any local decisions, cannot be questioned. It is so stated by all the text writers to whom we look for the general rules of the equity law. The latest English work, and a very satisfactory one, Eversley's Law of the Domestic Relations (2d Ed. 1896), giving the law as it was before the modern legislation in England, says at page 291:

"But in equity a married woman was permitted to contract with her husband in respect to her separate estate, and sue him with regard to it."

Again, at page 297, the author says:

"A husband formerly at common law could not make a valid loan to his wife, both because it was in the nature of a contract, and whatever property might have passed by delivery reverted to him in virtue of his marital right. But in equity the husband was enabled to sue his wife in respect to her separate estate. The husband can make a valid loan to his wife of property, whether specific chattels or other things. * * * In equity the capacity of a wife who had a separate estate to make a valid loan to her husband was clearly recognized, and she might have sued her husband, or proved against his estate after death, like any other creditor."

The same rule, so far as concerns loans by the wife to her husband from her separate estate, was authoritatively held by Lord Westbury in Woodward v. Woodward, 3 De G., J. & S. 671, 674. We will observe that any suggestion that there can be no transactions between husband and wife enforceable in equity, except through the medium of a trustee or some other third person, finds no support in the authorities, and was positively ignored in Woodward v. Woodward, where the loan was a direct one.

The same rules were stated in Wallingsford v. Allen, 10 Pet. 583, 593, 9 L. Ed. 542. The opinion rendered by Mr. Justice Wayne says:

"Agreements between husband and wife, during coverture, for the transfer from him of property directly to the latter, are undoubtedly void at law. Equity examines with great caution, before it will confirm them. But it does sustain them, when a clear and satisfactory case is made out that the property

Digitized by Google

is to be applied to the separate use of the wife. * * * In More v. Freeman, Bunb. 205, it was determined that articles of agreement between husband and wife are binding in equity without the intervention of a trustee."

More v. Freeman was decided in 1726. It was affirmed by the House of Lords, as appears at page 207, and has apparently been ever since regarded as authoritative. These expressions in Wallingsford v. Allen, in connection with the other decisions of the Supreme Court to which we will hereafter refer, like the English authorities which we have cited, require that we should disregard the limitations established in Massachusetts, so far as they bear upon any considerations dealt with in courts of equity with reference to the case before us. Therefore it is an established proposition that the claim offered in proof must be allowed, if it came from the separate estate of the wife in any sense in which the chancery courts can accept that expression.

We are left, then, to determine this condition. The case does not expressly show from what estate the funds were advanced by the proponent of the claim offered for proof, in that it does not expressly appear whether they came from her separate estate in any sense which the rules of equity or the statutes recognize. The record stands on the certificate of the referee, which states as follows:

"Upon hearing the defense offered, I find as a fact that the money had been advanced by Mrs. James to the firm as set forth in the account."

Thereupon he allowed the claim, which proceeding was reversed by the District Court on a point of law only. Thus the presumption is that the funds so loaned came from such an estate as Mrs. James could control in her own right. If it also appeared that the loans were made from an estate vested to her separate use according to the chancery rules, we would have occasion to go no further. There is no statement in the record expressly or impliedly assuming such an equitable separate estate, and therefore for us to accept its existence from what appears before us involves too violent a presumption. Taking the record together, the reasonable construction of it is that the loan was made from an estate vesting in Mrs. James in accordance with chapter 153 of the Revised Laws.

As, therefore, in order to sustain the proof of debt, we must proceed under the rules of the chancery courts, it is necessary for us to determine that those courts hold, or would hold, that an estate of personal property vested in a married woman in accordance with the statutory provision which we have cited would be regarded by them as, for all substantial purposes, the same as an estate vested for separate uses according to the equity rules, and be protected substantially to the same extent and in like manner. On the reason of the thing there can be no distinction. The underlying purpose of the Legislature to secure the interests of married women could not otherwise be made effective. The case at bar is a striking illustration that, unless equity thus regards the statutory estate, the anxiety of the Legislature in behalf of married women would fail, in most significant cases, of accomplishing a practical result. Of course, this observation would not apply to legislation which expressly authorized contracts between husband and wife and common-law suits between them.

Digitized by Google

Section 2 of chapter 153 neither aids this case nor tends otherwise. It vests in married women the right to make contracts independently of any question of holding separate estates. It contains a limitation forbidding her to make contracts with her husband; but as this, also, has no relation to a "separate estate" or "separate property," it is to be regarded only as a limitation on the general authority to make contracts, and therefore is an exception in favor of the common law only, and does not at all concern the chancery rules. This provision existed at the time of the decision in Atlantic National Bank v. Tavener, 130 Mass. 407, already cited. The question there was with reference to a loan from a married woman to her husband, without any intimation that the loan was from an estate vested for her separate use under the general rules in equity. In this respect the record stands precisely as it does at bar, and the presumption is that the loan was made from property vested in her in accordance with the Massachusetts statutes. Yet the opinion discusses, as we have already said, the extent of the rules in equity with reference to transactions concerning an estate vested to the separate use of a married woman, without making any distinction of the kind we are considering. This discussion would have been superfluous, unless the court assumed that, in equity, property held in accordance with the statute was to be regarded the same as an estate in express trust to the separate use of the wife.

Various other decisions tend to show that the Supreme Judicial Court of Massachusetts makes no distinction with reference to the equity rules under discussion, as limited by it, between a statutory estate and an estate vested by a deed of trust, or otherwise, for the sole use of a married woman. Among others is Willard v. Eastham, 15 Gray, 328, 335, 79 Am. Dec. 366. Throughout this opinion, which held that, as the law then stood, the statutory separate estate of a married woman could not be charged for a debt contracted by her, unless it in some way related to that estate, the discussion takes up and applies, especially at page 335, without discrimination, the rules recognized by the equity courts. The same is the fact with reference to Lombard v. Morse, 155 Mass. 136, 140, 29 N. E. 205, 14 L. R. A. 273. Frankel v. Frankel, 173 Mass. 214, 53 N. E. 398, 73 Am. St. Rep. 266, is a marked case in this particular, wherein it was held that a bill in equity may be had by a wife against her husband to recover her separate property obtained from her by his fraud and coercion. An examination of the record in the clerk's office discloses that the proceeding originated out of real estate in Boston of which the wife was seised in fee in her sole right. The opinion, at page 215, after referring to the fact that according to the statutes of Massachusetts the wife could not maintain an action at law against her husband, adds that, unless the bill could be maintained, she would be without a remedy, and that that of itself would be a sufficient reason for a decree in her favor. It continues that the statutes do not forbid suits between husband and wife, but simply provide that they shall not be construed to authorize them; and it adds:

"It would seem, therefore, that equitable remedies may be availed of as between husband and wife, in cases where they apply."

Digitized by Google

These authorities establish that, in the view of the Supreme Judicial Court, the statutory estate is to be construed for all the purposes we have in hand the same as an estate vested under a trust deed.

Our observations in reference to the decisions of the Supreme Judicial Court of Massachusetts, if we correctly understand them, aid the result which we have reached, because it is of assistance if that court has assumed that the statutes of that state are to be construed as vesting estates subject to equitable rules. Yet, even if we were mistaken in that respect, the result could not change our conclusion. It would not bar the federal courts from applying their own equitable rules according to their own methods of procedure. Examining what has been determined by those courts, the result seems to be clear. In Ankeney v. Hannon, 147 U. S. 118, 128, 13 Sup. Ct. 206, 37 L. Ed. 105 et seq., the court considered, discussed, and settled, on the rules of the chancery, questions with reference to an estate vested in the wife under state statutes which, in substance, so far as any present issues are concerned, were the same as those of Massachusetts; and this it did in a manner which impliedly holds that there is no distinction, so far as those rules are concerned, of the class which we are discussing. Indeed, on this point and on the entire case, Sykes v. Chadwick, 18 Wall. 141, 148, 21 L. Ed. 824, seems to be most persuasive in favor of the proponent of the proof of debt before us. It is true that, in this case, which came from the Supreme Court of the District of Columbia, there was a reference to a statute of the District regulating the rights of property of married women; and, both in the syllabus and in some citations, it seems to have been thought that the decision rested on the local statutes, and not on the general rules of equity. An examination of the facts and of the opinion, however, shows that the reverse of this is necessarily true, except to the limited extent otherwise which we will hereafter state. The transaction began with an inchoate right of dower, which existed only at common law, or by statute affirming or modifying the common law. The wife joined with her husband in a sale of the property, releasing her inchoate right, and obtaining in exchange therefor a promissory note signed by her husband and the purchaser. According to the strict rules of the common law, the note was joint, and void; but, under a statute of the District of Columbia, the only statute relied on by the counsel, it became a several obligation, so that a suit against the promisor other than the husband was successfully maintained by the wife, according to the judgment both of the Supreme Court of the District and the Supreme Court of the United States. The portion of the opinion with which we have to do is at page 148, 18 Wall., 21 L. Ed. 826. This refers to a statute of the District, which, so far as we are concerned, is substantially, if not in literal terms, the same as section 1 of chapter 153 of the Revised Laws of Massachusetts. It states that by force thereof the plaintiff acquired the capacity at law to receive property to her separate use. This expression, "to her separate use," was borrowed by the court from the chancery, because the phraseology of the statute is like that of the Massachusetts act, "separate property." The opinion proceeds:

"Having this capacity, she did receive and acquire, for a good and valid consideration moving from herself, the promissory note in question. This note.

Digitized by Google

then, being her separate property, not acquired by gift or conveyance from her husband in the sense in which the statute uses those terms, she is entitled to the benefit of the statute in reference to the exclusive possession and enjoyment of the note, and to the exclusive right of suing upon it. As to it, she is relieved from the incapacity which the common law imposed upon her, and is as if she were unmarried. The technical reasons, therefore, which at the common law rendered void a note or other obligation made by the husband to the wife, no longer exist in this case; and if there are still any such reasons which would compel the plaintiff, in enforcing the note as against her husband, to seek the aid of a court of equity, there are none to prevent her from suing the defendant upon it in a court of law."

At page 146, 18 Wall., 21 L. Ed. 826, the opinion elaborates what is said at page 148, 18 Wall., 21 L. Ed. 826, in reference to the necessity of the aid of a court of equity if the plaintiff had sought to proceed against her husband. It goes into the whole question of the rules of chancery which we have been discussing; and at page 147, 18 Wall., 21 L. Ed. 826, it says:

"We may therefore regard the transaction under consideration as valid and binding in equity, both on the defendant and the husband of the plaintiff."

Therefore, although the suit was brought under a statute of the District which allowed a severance, and so was at common law, yet the transaction was regarded by the court as binding in equity as between the wife and the husband, and this without the interposition of a trustee, or other third person, and though dealing with what was the estate of the wife at common law and under the statute. The trend of the opinion supports the conclusion that, on questions like this before us, there is no distinction under the chancery rules arising out of the formal nature of the wife's separate estate, with reference to whether it vested at common law or by statute or in equity.

The result of the authorities is summed up in Pomeroy's Equity Jurisdiction (2d Ed. 1892). In sections 79 and 80, the author points out the fact that the late married women's acts of various states have, most of them, superseded the necessity of applying the chancery rules. Legislation of this kind he describes as the first class. Then he adds, in section 79, as follows:

"By the second class, which prevails in most of the states, the wife's capacity is limited to agreements made with reference to her property. These contracts are wholly equitable in their nature and obligation, and can only be enforced by an equitable action against the property itself, and not against the wife personally."

In section 80 he observes:

"In all the other states where the wife's contracts are not yet made legal, the equitable jurisdiction is to a certain extent enlarged. It is no longer confined in its operation to her separate equitable estate held in trust for her by an express or implied trustee. It reaches to and operates upon all her property of which she holds the full legal title and interest. While the wife's power to make contracts which shall be a charge upon her property is not increased, the property thus affected, and which can be reached by a court of equity, is all which the wife holds in her own name and right by a legal title."

He repeats, and somewhat elaborates, to the same effect in section 1099. Therefore the authorities are in harmony with the natural, underlying principles which suggest no reason why the chancery courts

Digitized by Google

should not protect an estate vested in, or for the benefit of, the wife, equally, whether at the common law, or by statute, or under a deed of trust for her separate use.

The case may be summarized as follows: While the federal courts are required by the statutes creating them to accept, as rules of decision in trials at common law, the laws of the several states, except where the Constitution, treaties, or statutes of the United States otherwise provide, their proceedings in equity suits, involving equitable rights, cannot be impaired by the local rules of the different states in which they sit. The principles of equity as applied by them are the same everywhere in the United States. Of course, there may necessarily exist exceptional circumstances, as, for example, in Louisiana, where there never has been any law of uses and trusts as in England, so there can be no such thing as an estate limited to the separate use of the wife. There the whole topic of the rights and obligations of the wife is a part of the Code or statutory law of the state. So, also, if any state, say Massachusetts, had peculiar legislation relating to estates vested to the separate use of the wife, that legislation might have to be regarded by the federal courts in equity as well as at law. Such exceptional cases ordinarily fall within those chancery rules which relate to giving special remedies for rights existing only at common law or under a statute. The general rule which we state is well laid down in Curtis' Jurisdiction of the United States Courts (1880) 13, 14, and strikingly illustrated in Russell v. Southard, 12 How. 138, 147, 13 L. Ed. 927, Neves v. Scott, 13 How. 268, 271, 14 L. Ed. 140, Babcock v. Wyman, 19 How. 289, 299, 300, 301, 15 L. Ed. 644, Brick v. Brick, 98 U. S. 514, 516, 25 L. Ed. 256, and Kirby v. Lake Shore Railroad, 120 U. S. 130, 137, 138, 7 Sup. Ct. 430, 30 L. Ed. 569. Even in Massachusetts it appears, as we have already shown, that the topic which we are discussing is recognized as one concerning a right in equity limited or regulated in accordance with rules peculiar to that state. We refer to this as merely illustrating our proposition. It could not control it, because, under the decisions of the Supreme Court, it remains for the federal courts, not only to occupy the field of equitable rights according to their own rules, but also to determine what are the boundaries of that field.

The first question to be determined in the case at bar is whether an equitable right is involved. We find that the real issue presented is whether, under the federal bankruptcy statutes, which permit the allowance of equitable claims, a loan by a wife to her husband from property secured to her by the Massachusetts statutes creates an equity in her favor. This is a question of general equity. The Massachusetts courts hold that the general principles of equity jurisprudence are to be applied to the statutory separate estates of married women, the same as to an estate vested in trust for her separate use under the general rules of law. The only difference between the Massachusetts courts and courts elsewhere, with respect to the particular question now under consideration, is that the former hold to a limited rule; so that all courts agree that the general topic relates to an equitable right, and the only distinction is that the local treatment of it is peculiar. In cases where parties seek in equity only a concurrent remedy to enforce a legal right, the right is ordinarily determined by the common law of

Digitized by Google

the state where the litigation is pending; but, as we have seen, this proceeding asserts an equitable right, so that we are not bound by the local rule.

As the record comes to us, we are justified in holding that it authorizes us to make a final disposition of the case. There is nothing to suggest that the findings of the referee, or the assumptions which we have made, are not in conformity with the substantial facts.

The decree of the District Court is reversed; the case is remanded to that court, with directions to allow the proof offered by the appellant, Clitheroe D. James, as a valid proof of an unsecured claim against the partnership estate, and against the several estates of the individual partners, so far as such several estates are subject to the jurisdiction of the District Court in bankruptcy, subject to the rules for marshaling between partnership and individual estates; and the appellant recovers her costs of appeal.

ALDRICH, District Judge (dissenting). I cannot agree with the conclusion reached in the majority opinion. I do not understand that the rule which contemplates that equity jurisdiction, practice, and procedure in the federal courts, based upon the English chancery system, shall be uniform throughout the United States, goes so far as to create a legal or equitable status in respect to the property rights of married women within a given state different from that which exists under the local laws thereof. I do not understand that federal equity accords to married women within a state power to contract or a property status distinctly different and beyond that which exists in equity as administered by the state courts under its own statutory equity and common-law system.

The federal government never committed itself altogether to the idea of an adoption bodily of English chancery rights, or of the English limitations upon equitable rights, or to the idea of adopting bodily the prospective expansion and growth of the English chancery doctrines, to the end that the same should be imposed upon a state, contrary to its own idea of domestic relations and property rights. No state is bound to adopt the measures of supposed equitable reform inaugurated in another jurisdiction. The legal and equitable status of the property rights of married women in a given state is not regulated by general law or by general principles of equity. It rests upon local statutes and local law. It was the English doctrine as to scope of jurisdiction and the English system of practice and procedure that was adopted, and the adoption related to the situation as it then existed, and any subsequent enlargement or limitation of the English system by statute or otherwise must be excluded when we are considering what was actually adopted at the inauguration of our government. For a discussion of this question I will refer to Fontain v. Ravenel, 17 How. 369, 394, 395, 15 L. Ed. 80, and Alger v. Anderson (C. C.) 92 Fed. 696. As said by Chief Justice Taney in Meade v. Beale, Taney, 339, 361, Fed. Cas. No. 9,371:

"So, too, as relates to the jurisdiction of the Circuit Court sitting as a court of chancery. It is undoubtedly true, as contended for in the argument of the complainant, in regard to equitable rights, that the power of the courts of chancery of the United States is, under the Constitution, to be regulated by

Digitized by Google

the law of the English chancery; that is to say, the distinction between law and equity as recognized in the jurisprudence of England is to be observed in the courts of the United States, in administering the remedy for an existing right. The rule applies to the remedy, and not the right; and it does not follow that every right given by the English law, and which, at the time the Constitution was adopted, might have been enforced in the court of chancery, can also be enforced in a court of the United States. The right must be given by the law of the state, or of the United States. It is the form of remedy for which the Constitution provides; and, if a complainant has no right, the Circuit Court, sitting as a court of chancery, has nothing to remedy in any form of proceeding.

"In the case before the court, the question is: Is the bequest which the complainants claim a valid one by the laws of Maryland? It is a question which, in its nature, necessarily depends upon the laws of the respective states. Some of the states sanction devises of this description, some do not, and undoubtedly it depends upon every state to determine for itself to whom, in what form, and by what instrument any property within its borders may pass by devise or otherwise."

The present enlarged rights of married women in England, both at law and in equity, principally resulted from removal by statutory enactment of disabilities which the old common law imposed upon the wife by reason of the marital relations. The same is true in respect to the rights and liabilities of married women in the various states. The rights of married women, varying largely in the different states, have resulted from legislation extending the rights of the wife upon such grounds of public policy as each state has seen fit to adopt. It has never been understood that the property rights and liabilities of married women in a given state were regulated by the law of England or by the law of any other state.

It is conceded by the majority opinion that the claim of the wife in the case at bar would have no standing either at law or in equity in the state courts of Massachusetts. Indeed, section 1 of the Massachusetts statute, referred to in the majority opinion, expressly declares that the wife shall not be authorized thereby to make contracts with her husband, thus statutorily declaring it to be the policy of the state that contracts between husband and wife shall not be recognized and upheld in that jurisdiction. Moreover, in Woodward v. Spurr, 141 Mass. 283, 287, 6 N. E. 521, which was an equity proceeding involving a local insolvency law, which provided for the proof of equitable liabilities against insolvent estates, and in which the state statute in question was under consideration, it was expressly said:

"When contracts are themselves not authorized, validity cannot be imparted to them by affording a remedy for the breach of them through the medium of a court of equity."

Thus expressly and emphatically repudiating the idea of an enforceable equitable status founded upon considerations of trust in a case like this in the courts of Massachusetts.

Fleitas v. Richardson, 147 U. S. 550, 555, 13 Sup. Ct. 495, 37 L. Ed. 276, was an equity proceeding involving the claim of a wife against her husband, who had been discharged in bankruptcy, and not only was the law of the state with respect to the right and the local idea of trust relations recognized, but the right and the provability of the claim were made distinctly to rest upon the state law of Louisiana.

While I do not question for the purposes of this case that a claim

Digitized by Google

of the character of the one in question is now enforceable in equity in England and in nearly all of the states of the Union, and at law perhaps in some of the states, I cannot concur in the idea that the bankruptcy act was intended to create substantive rights to married women beyond those existing under the law of the state in which the married woman resides.

The proceeding here is to adjust the rights between local creditors in respect to a bankrupt estate in the state of their residence. There is no diverse citizenship, and therefore could be no regulation of the rights in question by the federal courts unless under the bankruptcy law. Therefore, if the view of my Brethren is sound, under the bankruptcy law, with no diverse citizenship, the wife has a property right of the value of $20,000, while, if the bankruptcy law were to be repealed, she would have no right enforceable at law or in equity either in the state or federal courts. Giving a status to the claim of a married woman against the estate of her husband in bankruptcy different from that which exists under the local law impairs the substantive rights of the other creditors as they exist under the laws of the state, and is therefore inequitable as to them. It would be inequitable and unwarrantable in the state courts, because against the policy and contrary to the law of the state, and therefore not founded upon a legal or equitable right or remedy enforceable in that jurisdiction, and inequitable in the federal courts because, in the absence of diverse citizenship, the federal courts, in the exercise of general equity power independent of bankruptcy, would have no jurisdiction, equitable or otherwise, to establish and maintain the right.

It is difficult for me to adopt the view that the bankruptcy law was intended to create a property or contract right as between local creditors, either in a legal or an equitable sense, beyond that which obtains according to the rules of property existing under the laws of the state. If the conclusion of the majority is sound, there exist in Massachusetts two rules of property in respect to married women—one rule, distinctly and deliberately expressed, established by its statutes, construed by the highest court of the state, regulating the rights of married women, and another and a very different rule of property, administered in the same jurisdiction by the federal courts, a condition, in my opinion, never contemplated under our system of federal and state governments, in respect to parties residing in the same state and whose property rights are based upon local law.

English and American decisions in other jurisdictions, as to claims of married women enforceable in equity, have no bearing, as it seems to me, upon a situation involving a Massachusetts statute, Massachusetts decisions, a Massachusetts estate, and Massachusetts creditors only. The property rights of married women in Massachusetts are established upon grounds of public policy, upon which the state is entitled to stand. It has been repeatedly decided by the highest court of the state that a claim of this character, even under insolvency conditions, has no legal standing, either at law or in equity, as against the other creditors. Such decisions are based upon the rules of common law and equity as modified and enlarged by the statutes of Massachusetts. As there expressed by its highest court, the rights of mar-

Digitized by Google

ried women are based upon "the rule of the common law which has been declared and recognized by the Legislature." Bank v. Tyndale, 176 Mass. 547, 550, 57 N. E. 1022, 51 L. R. A. 447; Clark v. Patterson, 158 Mass. 388, 33 N. E. 589, 35 Am. St. Rep. 498; Woodward v. Spurr, 141 Mass. 283, 6 N. E. 521; Fowle v. Torrey, 135 Mass. 87.

When our government was established, and the common law of England, so far as not inconsistent with our institutions, was adopted by the governments of the various states, and when the English chancery system was adopted by the federal government, and for a long time thereafter, a claim of a married woman like the one in question had no standing in that country at law, or in equity it is believed, in a suit by the wife against the husband or his estate upon a naked loan relieved from relations and considerations of trust; but, however that may be, it is clear, even if otherwise, now that for many years the claim of a married woman had no standing there either at law, or in equity as administered in bankruptcy proceedings, where the claim of the wife was strictly contractual and where creditor interests were involved, as is the case here. Robson's Bankruptcy (6th Ed.) 475, and cases cited. In re Beale, 4 Ch. 249. According to Taney, as has been already said, in order to have an equitable remedy, there must be a right based upon federal or state law; and, as said by Lord Eldon, in Dewdney, Ex parte, 15 Ves. 479, 498, in discussing the English doctrine as to equitable claims in bankruptcy:

> "Upon the whole, my opinion as to the general point is that in the consideration of this statute a commission of bankruptcy is nothing more than a substitution of the authority of the Lord Chancellor, enabling him to work out the payment of those creditors who could by legal action or equitable suit have compelled payment, and that the objection upon the statute [statute of limitations] is competent to the creditors * * * regarding the claim of each creditor as a suit depending."

Indeed, section 23a of the bankrupt law (Act July 1, 1898, c. 541, 30 Stat. 552, 553 [U. S. Comp. St. 1901, p. 3431]), conferring law and equity jurisdiction upon the Circuit Courts in bankruptcy matters, adopts the idea expressed by Lord Eldon that the right as between the parties should be regulated according to law and equity in the same manner and to the same extent as though bankruptcy proceedings had not been instituted, thus making the right or the claim depend upon its original status of enforceability or nonenforceability at law or in equity under general equity powers, independent of the bankruptcy law; and under this standard there was no right enforceable under the state law, and no equity jurisdiction or right cognizable in the federal courts, in the absence, as is the case here, of diverse citizenship. The question in this case is therefore a very plain and simple one. Was the claim, independent of the bankrupt law, based upon a right enforceable in the state under its laws, or in the federal courts under their general equity powers? And surely this question must be solved in the negative.

It thus results in the case at hand that we have a situation where the claim of the wife was not recognized by the local statutes of Massachusetts and not enforceable in its courts, and where there is no equity jurisdiction in the federal courts in the absence of diverse citizenship,

Digitized by Google

and therefore no equitable right enforceable in such courts under their general equity powers independent of the bankruptcy law. And the consequence is that the majority opinion departs from and goes contrary to the idea expressed by Lord Eldon that creditors have a right to object to an equitable claim, not cognizable and not enforceable either at law or in equity, and accords to a creditor wife a right and a status not recognized by the state law, a right and a status not enforceable in the federal courts of equity under their general equity powers, and one with which they could have nothing to do, independent of the bankruptcy law and bankruptcy proceedings.

Under our distribution of governmental functions between the federal and state governments, and especially in view of the recognition by the federal government of the power of the state (under certain limited and expressly defined constitutional restrictions not material here) to establish and regulate rules of property within its jurisdiction, it results clearly and necessarily that the legal and equitable status of property rights of married women in a given state is regulated by local law; that is to say, by the old common law modified and enlarged by such judicial innovations and such legal and equitable statutory reforms as it has seen fit to adopt, and by such, if any, of the modern ideas and expanded rules of common law and equity adopted in other jurisdictions as the Legislature and the courts of the state in question have seen fit to recognize and declare.

While a state may not, by statutory enactment or otherwise, place any restrictions upon federal equity practice and procedure, which is uniform throughout the United States, or impede or impair its jurisdiction, which is likewise uniform, it may regulate property rights within its jurisdiction, and the laws of the state regulating such rights are regarded by federal courts as rules of decision in respect to property rights so regulated by the local law. And, as said by Woods, Circuit Judge, in Mitchell v. Lippincott, 17 Fed. Cas. 503, 506 (Fed. Cas. No. 9,665), which was an equity proceeding:

"If the rule is ever to be applied to any case, it seems to me the construction of the married women's law is a proper case for its application."

The Supreme Court, in affirming the decision of Judge Woods, 94 U. S. 767, 770, 24 L. Ed. 315, in referring to the state law, and the state decisions, said:

"This construction is a rule of property of the state, and we are as much bound by it as if it were a part of the statute. It is our duty to apply the law of the state as if we were sitting there as a local court, and this case were before us as such a tribunal."

Again, referring to the local statute:

"Where the intent to exclude the marital rights of the husband is doubtful or equivocal, or rests on speculation, the statute intervenes and fixes the character of the estate."

Mr. Justice Curtis, in Neves v. Scott, 13 How. 268, 271, 14 L. Ed. 140, while holding that the Supreme Court, upon general questions of equity, would not be bound by the decisions of the Supreme Court of Georgia, in the absence of a statute, a custom, or a local law, in effect recognized the idea of the right of a state to regulate legal and equitable property rights by local statutory law.

Digitized by Google

While the leading aspect of the principle that the federal courts regard as rules of decision the decisions of state courts has reference to the construction of statutes and decisions affecting titles to real property, the rule is by no means limited to such subjects; for it includes as well the exposition of the local common law of a state by its highest courts, like preferences between creditors, as in Parker v. Phetteplace, 2 Cliff. 70, Fed. Cas. No. 10,746, like questions of possession of personal property, as in Allen v. Massey, 17 Wall. 351, 21 L. Ed. 542, like questions relating to executions, as in United States v. Morrison, 4 Pet. 124, 7 L. Ed. 804, the construction of wills, as in Smith v. Shriver, 3 Wall. Jr. 219, Fed. Cas. No. 13,108, the equitable rights of married women, as in Mitchell v. Lippincott, 1 Cent. Law J. 265,[1] the validity of a mortgage not truly describing the debt intended to be secured, as in Townsend v. Todd, 91 U. S. 452, 23 L. Ed. 413, the power of a corporation to issue bonds, as in Thomas v. County of Scotland, 3 Dill. 7, Fed. Cas. No. 13,909, as to the time when a corporation was formed, as in Stone v. Wisconsin, 94 U. S. 181, 24 L. Ed. 102, and in respect to many other subjects relating to property rights within a state. See, also, 1 Bates on Federal Equity, §§ 6–10; Bump's Federal Procedure, pp. 416–420.

Nothing could be more disturbing or hurtful to a community than the existence within its domain of two sets of law or two measures of equity respecting property rights; and this would be especially so with respect to a system which undertakes to regulate the social, domestic, and property status between the sexes, and the rights of a married woman as between her husband and creditors, who, in reliance upon the local law regulating the rights of property, deal with him in the ordinary course of business within the bounds of the state which creates and maintains its own local system of law and jurisprudence.

I cannot conceive, aside from diverse citizenship or a federal statute expressly creating a right, that the federal courts are, or ought to be, charged with any responsibility in the adjustment of property rights, equitable or otherwise, within a state between its citizens. The idea that such a right or responsibility exists contravenes a fundamental theory as to the distribution of power between the federal and state governments. It is a strained, startling, and subversive construction that carries a bankrupt law, intended only to distribute the assets of a bankrupt estate between local creditors, according to the right or equity as existing independent of the bankrupt law, to the point of creating a substantive, enforceable, federal right, which shall override the positive law and the public policy of a state with respect to the legal and equitable status of married women in property situations, domestic affairs, and business conditions relating to property rights within a state.

It must be always borne in mind, of course, that the issue here is not one alone between the married woman and her husband, but involves as well the equitable rights of creditors. This element distinguishes this case from equitable proceedings to protect the separate estate of the wife as against the husband.

The Massachusetts statute and the Massachusetts cases have established a local rule of property which the federal courts are bound to

[1] Fed. Cas. No. 9,665.

Digitized by Google

recognize and enforce. It is said in Walker v. Walker, 9 Wall. 743, 754, 19 L. Ed. 814:

"The Circuit Courts of the United States, with full equity powers, have jurisdiction over executors and administrators, where the parties are citizens of different states, and will enforce the same rules in the adjustment of claims against them that the local courts administer in favor of their own citizens."

And in Ewing v. City of St. Louis, 5 Wall. 413, 419, 18 L. Ed. 657, which was an equity proceeding, it is said:

"The complainant can ask no greater relief in the courts of the United States than he could obtain were he to resort to the state courts. If in the latter courts equity would afford no relief, neither will it in the former."

I agree with the reasoning of Judge Lowell in Re Talbot (D. C.) 110 Fed. 924, which he adopted as the ground for disallowing the claim in question.

(131 Fed. 415.)

BOISE CITY IRR. & LAND CO. v. CLARK et al., County Com'rs.

(Circuit Court of Appeals, Ninth Circuit. May 31, 1904.)

No. 999.

1. APPEAL—DECISIONS REVIEWABLE—DECREE ADJUDICATING PRINCIPLE.

A decree affirming an order of a municipal body fixing maximum rates to be charged by an irrigation company for water furnished consumers during a certain year may be reviewed on appeal, although the year has expired, where, under the statute, such rate continues until changed, or where some question of law is involved, the decision of which may affect the future action of the authorities.

2. IRRIGATION COMPANIES—STATE REGULATION OF CHARGES—CONSTITUTIONALITY OF MAXIMUM RATES.

Under the Constitution of Idaho, which declares the use of all waters appropriated for sale, rental, or distribution to be a public use, and the right to collect compensation therefor a franchise, which cannot be exercised except by authority of, and in the manner prescribed by, law, and which authorizes the Legislature to provide, as it has done, for the fixing of maximum rates to be charged for water so sold, an irrigation company appropriating water for sale has no authority to make a distinction between its consumers, and, while supplying some with water under private contracts at low rates, attack the validity of maximum rates fixed by the county commissioners under the statute, on the ground that, as applied to its other consumers, they will not yield a reasonable return on its investment, but will amount to a taking of its property without compensation. In determining the reasonableness of such rates, they must be considered as applicable to all its consumers.

3. SAME.

A maximum rate to be charged by an irrigation company for water furnished to consumers, fixed by county commissioners as provided by statute, is not unconstitutional, as depriving the company of its property without compensation, because it will not produce sufficient revenue above expenses and fixed charges to pay a reasonable income on the money invested by the company, where its plant was constructed on a larger scale and at a greater expense than necessary to supply its present customers, and was intended to supply a greater number than it has as yet obtained.

Appeal from the Circuit Court of the United States for the Central Division of the District of Idaho.

Digitized by Google

Fremont Wood and Edgar Wilson, for appellant.
Alfred A. Fraser, for appellees.

Before GILBERT and ROSS, Circuit Judges, and HAWLEY, District Judge.

ROSS, Circuit Judge. The appellant is a New Jersey corporation, and brought the present suit in the court below against the county commissioners of Ada county, Idaho, sitting as a board of water commissioners, to obtain a decree annulling an order made by the commission fixing a maximum rate to be charged by the complainant for water delivered from its canal system to consumers thereof for the irrigating season of the year 1901. The provisions of the Constitution and statutes of the state of Idaho bearing upon the question are as follows:

Section 1 of article 15 of the state Constitution declares:

"The use of all waters now appropriated, or that may hereafter be appropriated for sale, rental, or distribution; also of all waters originally appropriated for private use, but which after such appropriation has heretofore been, or may hereafter be sold, rented, or distributed, is hereby declared to be a public use, and subject to the regulation and control of the state in the manner prescribed by law."

Section 2 of the same article of the Constitution provides that:

"The right to collect tolls for compensation for the use of water supplied to any county, city, or town, or water district, or the inhabitants thereof, is a franchise, and cannot be exercised except by the authority of or in the manner prescribed by law."

Section 6 of the same article declares that:

"The Legislature shall provide by law the manner in which reasonable maximum rates may be established, to be charged for the use of water sold, rented, or distributed for any useful or beneficial purpose."

In pursuance of those provisions of the Constitution of the state, its Legislature enacted, in its Civil Code, as follows:

"Sec. 2579. Standard of Measurement of Water. A cubic foot of water per second of time shall be the legal standard for the measurement of water in this state."

"Sec. 2595. Duty of Owner of Canal to Keep Flow of Water. Every person, company or corporation owning or controlling any ditch, canal or conduit for the purpose of irrigation shall, during the time from April 1st to the 1st day of November of each year keep a flow of water therein, sufficient to the requirements of such persons as are properly entitled to the use of water therefrom: provided, however, that when the public streams or other natural water sources from which the water is obtained are too low and inadequate for that purpose, then such ditch, canal or conduit shall be kept with as full a flow of water therein as may be practicable, subject, however, to the rights of priority from the streams or other natural sources, as provided by law.

"Sec. 2596. Owner of Canal must Have Same Ready to Deliver, When. The owners or persons in control of any ditch, canal or conduit used for irrigation purposes shall maintain the same in good order and repair, ready to deliver water by the first of April in each year, and shall construct the necessary outlets in the banks of the ditches, canals or conduits for a proper delivery of water to persons having rights to the use of the water.

"Sec. 2597. Appointment of Water Master—His Duty. It shall be the duty of those owning or controlling any ditch, canal or conduit to appoint a superintendent, or water master, whose duty it shall be to measure the water from such ditch, canal or conduit through the outlets of those entitled thereto, according to his pro rata share, and no account or demand for the use of such

Digitized by Google

water during any time such superintendent or water master is not so employed is valid or collectible.

"Sec. 2598. Liability for Failure to Deliver Water. Any superintendent or any person having control or charge of the said ditch, canal or conduit, who shall willfully neglect or refuse to deliver water as in this chapter provided, and the owner or owners of such ditch, canal or conduit, shall be liable in damages to the person or persons deprived of the use of water to which he or they was or were entitled as herein provided.

"Sec. 2599. Water must be Furnished upon Demand. Any person, company or corporation owning or controlling any canal or irrigation works for the distribution of water under a sale or rental thereof, shall furnish water to any person or persons owning or controlling any land under such canal or irrigation works for the purpose of irrigating such land or for domestic purposes, upon a proper demand being made and reasonable security being given for the payment thereof: provided, that no person, company or corporation shall contract to deliver more water than such person, company or corporation has a title to by reason of having complied with the laws in regard to the appropriation of the public waters of this state.

"Sec. 2600. Manner of Distribution—Amount to be Used. Any person or persons owning or controlling land which has or has not been irrigated from any such canal, shall on or before January 1st of any year, inform the owner or person in control of such canal whether or not he desires the water from said canal for the irrigation of land during the succeeding season, stating also the quantity of water needed. In distributing water from any such canal, ditch or conduit during any season, preference shall be given to those applications for water for land irrigated from said canal the preceding season, and a surplus of water, if any there be, shall be distributed to the lands in the numerical order of the applications for it. But no demand for the purchase of a so-called 'perpetual water right,' or any contract fixing the annual charges or the quantity of waters to be used per acre shall be imposed as a condition precedent to the delivery of water annually, as provided in this chapter; but the consumer of water shall be the judge of the amount and the duty of the water required for the irrigation of his land, and the annual charges to be made and to be fixed under the further provisions of this chapter, shall hereafter be based upon the quantity of water delivered to consumers, and shall not in any case depend upon the number of acres irrigated by means of such amount of water delivered."

"Sec. 2605. Boards of Water Commissioners. The boards of county commissioners of the respective counties of this state are hereby created boards of water commissioners, with power to enforce the provisions of this chapter, and for the better discharge of their duties they shall have authority to make such other regulations to secure the equal and fair distribution of water in accordance with the rights of priority of appropriation as may in their judgment be needed in their respective counties: provided, such regulations shall not be in violation of any part of this chapter, or other laws of the state, but merely supplementary to and necessary to enforce the provisions of this chapter and general laws on the subject of irrigation."

"Sec. 2608. County Commissioners to Hear Applications. The county commissioners of each county now organized, and of each county to be hereafter organized in this state shall, at their regular session in January of each year and at such other sessions as they, in their discretion may deem proper, hear and consider all applications which may be made to them by any party or parties interested in either furnishing or delivering for compensation, or by any person or persons using or consuming water for irrigation or other beneficial purpose or purposes from any ditch, canal or conduit, the whole or any part of which shall be in such county, which application shall be supported by such affidavit as the applicant or applicants may present, showing reasonable cause for such board of county commissioners to proceed to fix a maximum rate of compensation for water thereafter delivered from such ditch, canal or conduit within such county: provided, that when any ditch, canal or conduit shall extend into two or more counties, the county commissioners of each of such counties shall fix the maximum rate for water used in that county."

Digitized by Google

Sections 2609 and 2610 provide for the making of the order and the issuance and service of the notice bringing in all interested parties.

"Sec. 2611. May Adjourn Hearing—What Evidence to be Received—Attendance of Witnesses—Order of Board. Said board of commissioners may adjourn or postpone any hearing from time to time as may be found necessary; but when in session they shall hear and examine all legal testimony or proofs offered by any party interested as aforesaid, as well as concerning the original cost and present value of the works and structure of such ditch, canal or conduit, as well as the cost and expense of maintaining and operating the same, and all matters which may affect the establishment of reasonable maximum rates for water to be furnished and delivered therefrom, and they may issue subpœnas for witnesses which subpœnas shall be served in the same manner in which subpœnas are served in civil cases; and said board may also issue subpœnas for the production of all books and papers required before them. The district court of the proper county, or the judge thereof in vacation, may in case of refusal to obey the subpœnas of the board of county commissioners, compel obedience thereto, or punish for refusal to obey after hearing, as in cases of attachment for contempt of such district court. Upon hearing and considering all the evidence and facts and matters involved in the case, said board of county commissioners shall enter an order describing the ditch, canal or conduit, or other waterworks in question with sufficient certainty, and fixing a just and reasonable maximum rate of compensation for water thereafter delivered from such ditch or other waterworks as last aforesaid within the county in which said commissioners act; and such rate shall not be changed within one year from the time when such rates shall be so fixed: provided, that an appeal or writ of error shall lie in behalf of the proprietor of such works, or any person using or claiming to be entitled to use water therefrom, for review in the district court.

"Sec. 2612. In Fixing Rates, What to be Considered. In fixing rates at which water shall be furnished, the board of commissioners shall take into consideration the cost of the works, the expenses of keeping the same in repair, and all other conditions that affect the cost to deliver the same. Whenever it shall appear to the board of county commissioners from competent evidence that any consumer or consumers of water distributed through any ditch or canal, is or are entitled to the distribution or use of any water therefrom, at not to exceed a proportionate amount of the actual cost of maintenance and operation of said ditch or canal, they shall upon request of such person or persons so entitled, fix the rate per cubic foot per second to be charged to such consumer or consumers, for the current year."

Under the foregoing provisions of the Constitution and statutes of Idaho the commissioners acted in fixing the rate of which the appellant complains. It insists that the rate as so fixed is too low to admit of just compensation for the services rendered, and, indeed, amounts to a practical confiscation of the defendant's property, contrary to the provisions of the Constitution of the United States. The court below, upon consideration of the evidence introduced on the hearing, said that the "rate fixed is somewhat too low," but held that it would not be justified in annulling it.

It appears that the water in question was appropriated by the predecessors in interest of the appellant, under and in pursuance of the constitutional and statutory provisions of the state, from the Boise river, and conducted by a canal and its various branches through a portion of Ada county, and into a portion of Canyon county, of the state, and thence distributed to consumers for beneficial uses; about four-fifths of the construction, maintenance, and cost of the system being in Ada county, and one-fifth in the county of Canyon.

It is contended on the part of the appellees that, as the period for

Digitized by Google

which the rate in question was fixed has expired, the case has become but little, if any, more than a moot case; but the courts have entertained and decided such cases heretofore, partly because the rate, once fixed, continues in force until changed as provided by law, and partly because of the necessity or propriety of deciding some question of law presented which might serve to guide the municipal body when again called upon to act in the matter.

Prior to the enactment of the state statute making a cubic foot of water per second the legal standard for the measurement of water in Idaho, the appellant had furnished its consumers with water at $1.50 per acre, and afterwards at $75 per cubic foot per second, or $1.50 per inch; there being practically 50 miner's inches in a cubic foot of water. The income derivable under the order complained of was stated in the evidence on the part of the complainant at $29,869, and was accepted as correct by the court below; but it appears from the appellant's own evidence that it distributed water to 2,750 acres of land under so-called perpetual water rights, growing out of private contracts, 385 acres of which were furnished practically free, 580 acres at 15 cents an acre, and 600 acres at 65 cents an acre. These 1,565 of the 2,750 acres would, at the rate fixed by the board of commissioners, yield the appellant $2,014.56, of which it makes no account, to say nothing of the yield at the same rate from the remaining 1,185 acres of the 2,750 acres. All of these 2,750 acres supplied with the water in question by the appellant should, in our opinion, be counted at the rate fixed by the order of the commissioners, in estimating the amount derivable therefrom by the appellant; any and all contracts made by it or its predecessors in interest to the contrary notwithstanding. If 1,565 acres can be supplied under private contract at from nothing to 65 cents an acre, and the balance of the land supplied by the system be made to pay a rate which will yield fair interest on the actual value of the entire property, then, clearly, any other number of acres, less than the whole, can be likewise supplied under private agreement, and thus practically the entire burden of supplying the necessary revenue be placed upon a comparatively small part of the land supplied. Nothing can be clearer than that the supplying of any portion of the land under the system at anything less than the regularly established rate adds to the burden of the other land which is thereby called upon to make good "just compensation" for the use of the property.

Where any distinction between the consumers of the waters in question is authorized to be made, we are unable to understand. Those waters were appropriated from a public stream of the state, for sale, rental, and distribution, under and by virtue of the Constitution of the state, declaring, in express terms, that the use of all such waters so appropriated is a public use, and subject to regulation and control of the state in the manner prescribed by law; that the Legislature of the state shall provide by law the manner in which maximum rates may be established, to be charged for the use of water sold, rented, or distributed for any useful or beneficial purpose; and that the right to collect compensation for the use of any such water supplied to any county, city, or town, or water district, or to the inhabitants thereof, "is a franchise, and cannot

Digitized by Google

be exercised except by the authority of or in the manner prescribed by law."

The case of San Diego Land & Town Company v. City of National City (C. C.) 74 Fed. 79, presented the question, among others, whether that company had the legal right to demand and receive a sum of money in addition to the annual rates it was authorized to charge, as a condition upon which it would furnish water appropriated by it under similar provisions of the Constitution and laws of the state of California, to the persons for whose use the appropriation was made. The thing for which that company demanded a sum of money in addition to the annual rates it was by law authorized to charge it designated as a "water right," and it was there said:

"It does not change the essence of the thing for which the complainant demands a sum of money to call it a 'water right,' or to say, as it does, that the charge is imposed for the purpose of reimbursing complainant in part for the outlay to which it has been subjected. It is demanding a sum of money for doing what the Constitution and laws of California authorized it to appropriate water within its limits, conferred upon it the great power of eminent domain, and the franchise to distribute and sell the water so appropriated, not only to those needing it for purposes of irrigation, but also to the cities and towns, and their inhabitants, within its flow, for which it was given the right to charge rates to be established by law, and nothing else. No authority can anywhere be found for any charge for the so-called water right. The state permitted the water in question to be appropriated for distribution and sale for purposes of irrigation, and for domestic and other beneficial uses; conferring upon the appropriator the great powers mentioned, and compensating it for its outlay by the fixed annual rates. The complainant was not obliged to avail itself of the offer of the state, but, choosing, as it did, to accept the benefits conferred by the Constitution and laws of California, it accepted them, charged with the corresponding burden. Appropriating, as it did, the water in question for distribution and sale, it thereupon became, according to the express declaration of the Constitution, charged with a public use. 'Whenever,' said the Supreme Court of California in McCrary v. Beaudry, 67 Cal. 120, 121, 7 Pac. 265, 'water is appropriated for distribution and sale, the public has a right to use it; that is, each member of the community, by paying the rate fixed for supplying it, has a right to use a reasonable quantity of it in a reasonable manner. Water appropriated for distribution and sale is ipso facto devoted to a public use, which is inconsistent with the right of the person so appropriating it to exercise the same control over it that he might have exercised if he had never so appropriated it.'"

The same views were expressed and amplified in the subsequent case of Lanning v. Osborne (C. C.) 76 Fed. 319, and, in effect, find strong support in the very recent decision of the Supreme Court of the United States in the case of The County of Stanislaus, in the State of California, et al., Appellants, v. The San Joaquin & Kings River Canal & Irrigation Company, 192 U. S. 201, 24 Sup. Ct. 241, 48 L. Ed. 406, which involved, among other things, the question whether a water company incorporated under an act of the Legislature of the state of California enacted in 1862 (St. 1862, p. 540, c. 417), and providing that "every company organized as aforesaid shall have power, and the same is hereby granted * * * to establish, collect, and receive rates, water rents, or tolls which shall be subject to regulation by the board of supervisors of the county or counties in which the work is situated, but which shall not be reduced by the board of supervisors so low as to yield to the stockholders less than one and one half per cent. per month

Digitized by Google

upon the capital actually invested" (section 3, p. 541), constituted a contract between the state and the water company, which was protected by the Constitution of the United States. After citing various cases, the Supreme Court said:

"It is true that the cases cited involved questions of alleged contracts for exemption from taxation, in regard to which it has been said that no presumption exists in favor of a contract by a state to exempt lands from taxation, and that every reasonable doubt should be resolved against it. Statutes of California providing that the use of all water appropriated for sale, rental, or distribution should be a public use, and subject to public regulation and control, are valid. San Diego, etc., Co. v. National City, 174 U. S. 739 [19 Sup. Ct. 804, 43 L. Ed. 1154]. And companies formed for the purpose of furnishing water for irrigation purposes have been held, in that state, to be public municipal corporations, and the use of the water for the purposes mentioned a public use. See cases cited in Fallbrook Irrigation District v. Bradley, 164 U. S. 111, 139 [17 Sup. Ct. 56, 41 L. Ed. 369]. To regulate or establish rates for which water will be supplied is, in its nature, the execution of one of the powers of the state, and the right of the state so to do should not be regarded as parted with any sooner than the right of taxation should be so regarded, and the language of the alleged contract should in both cases be equally plain. Owensboro v. Owensboro Waterworks Company, 191 U. S. 358 [24 Sup. Ct. 82, 48 L. Ed. 217]. In our judgment, the language of the act of 1862 did not amount to a contract that the rates for the use of water should never be lowered below the amount provided for in that act."

Certainly, if an express provision in the charter of a company to the effect that the rates to be charged by it should never be reduced by the municipal body below a stated amount is void for the reason that it is an interference with the power of the state to regulate or establish rates for which such water shall be supplied, a fortiori such state power cannot be interfered with by any contract between such company and a private person, and a fortiori they also are void for precisely the same reason.

The court below, upon the evidence introduced, fixed the value of the property at the time of the service in question at $250,000, and the cost of maintenance of the plant for the year 1901 at $20,000. Some of the claims of the appellant bearing upon the value of the plant and the cost of maintenance are undoubtedly extravagant, and some of them are very indefinite and uncertain. If it be conceded that the amounts fixed by the court below in respect to these matters are too low, yet a large increase in both the value of the property and in the cost of the maintenance of the plant may be allowed, and still sufficient compensation be derivable under the order of the board of commissioners in question to answer the constitutional requirement, for the amount derivable from the 2,750 acres, at the established rate, is to be accounted for and counted, as above held. The rule by which the courts must be governed in such cases was stated by the Supreme Court in San Diego Land & Town Company v. City of National City, 174 U. S. 753, 19 Sup. Ct. 810, 43 L. Ed. 1154, in these words:

"That it was competent for the state of California to declare that the use of all water appropriated for sale, rental, or distribution should be a public use, and subject to public regulation and control, and that it could confer upon the proper municipal corporation power to fix the rates of compensation to be collected for the use of water supplied to any city, county, or town, or to the inhabitants thereof, is not disputed, and is not, as we think, to be doubted. It is equally clear that this power could not be exercised arbitrarily, and with-

Digitized by Google

out reference to what was just and reasonable as between the public and those who appropriated water and supplied it for general use, for the state cannot, by any of its agences, legislative, executive, or judicial, withhold from the owners of private property just compensation for its own use. That would be a deprivation of property without due process of law. Chicago, B. & Q. R. Co. v. City of Chicago, 166 U. S. 226, 17 Sup. Ct. 581, 41 L. Ed. 979; Smyth v. Ames, 169 U. S. 466, 524, 18 Sup. Ct. 418, 42 L. Ed. 819. But it should also be remembered that the judiciary ought not to interfere with the collection of rates established under legislative sanction unless they are so plainly and palpably unreasonable as to make their enforcement equivalent to the taking of property for public use without such compensation as, under all the circumstances, is just both to the owner and to the public; that is, judicial interference should never occur unless the case presents, clearly and beyond all doubt, such a flagrant attack upon the rights of property under the guise of regulations as to compel the court to say that the rates prescribed will necessarily have the effect to deny just compensation for private property taken for the public use."

Moreover, it appears from the testimony of the manager of the appellant company, in answer to a question by its counsel as to why the property had not in the past been made to pay "fixed maintenance charges, interest upon its bonded indebtedness, and a reasonable interest upon the additional investment necessitated in the construction of the property," that:

"The main cause of the delay is the fact that the country has not settled up as fast as they expected. They have always expected that the amount of land put under irrigation would increase more rapidly, and so put it in shape that it would pay. Another point was the strong disposition on the part of the consumers against any increase of rate, manifested at different times; and the owners of the canal were averse to increasing the rate, in hopes that the amount of land under irrigation would increase, or the company [country] settle up faster."

"If a plant is built," said the Supreme Court in San Diego Land & Town Company v. Jasper, 189 U. S. 439, 446, 23 Sup. Ct. 571, 47 L. Ed. 892, "for a larger area than it finds itself able to supply, or, apart from that, if it does not as yet have the customers contemplated, neither justice nor the Constitution requires that, say, two-thirds of the contemplated number should pay a full return."

The judgment is affirmed.

(131 Fed. 422.)

FIRST NAT. BANK OF MILES CITY v. STATE NAT. BANK OF MILES CITY.

In re McINTIRE et al.

(Circuit Court of Appeals, Ninth Circuit. May 2, 1904.)

No. 1,008.

1. PARTNERSHIP—DEBTS OF PREVIOUS FIRM—LIABILITY—EVIDENCE.

A partnership agreement provided that the incoming partner should pay $2,500 in cash, and execute to the other partner, who had an established business, notes for the remainder of the purchase price of a half interest in the business, to be determined by an inventory thereafter to be taken. The original partner took sole charge of the financial and accounting part of the business. The inventory was not taken, and the notes were not executed, but the parties continued to do business as partners on an equal

Digitized by Google

basis. The original partner represented to the incoming partner that his indebtedness only amounted to about $10,000, when in fact it exceeded $30,000; and shortly thereafter he borrowed $10,000 from defendant bank, which he represented to his partner was for the firm's benefit, but which he in fact paid on his personal indebtedness to complainant bank, and thereafter, without his partner's knowledge, executed two notes to complainant in renewal of other notes, a part of his personal indebtedness. *Held*, that the incoming partner did not agree to assume any part of the indebtedness of the old firm, and that the notes so renewed were not chargeable against the new firm's assets in bankruptcy.

2. SAME—NOTICE.

Where a bank had knowledge of facts putting it on inquiry as to whether a member of a firm largely indebted to the bank was authorized to execute notes in the firm name to secure such pre-existing indebtedness, the bank was not entitled to prove such notes as against the firm's assets, in the absence of such authority, notwithstanding the partner executing the notes had implied power, as a member of an ordinary trading firm, to execute notes in the name of the firm.

3. SAME—RATIFICATION.

Where an incoming partner had no knowledge until a very short time before bankruptcy proceedings against the firm were instituted that his partner had executed firm notes to secure the partner's pre-existing indebtedness to a bank, and the books of the firm, if examined by such partner, would not have disclosed the execution of such notes, such incoming partner did not ratify their execution, so as to justify their allowance as a claim against the firm's assets.

Appeal from the District Court of the United States for the District of Montana.

Appellant and appellee were creditors of the firm of McIntire & Middleton, bankrupts. In the proceedings in bankruptcy, appellant filed its claim upon overdrafts and notes against McIntire & Middleton amounting to $18,378.21, principal. The referee allowed the claim, including the interest thereon, in the sum of $19,012.21. The appellee herein then moved the referee to expunge and disallow the claim of appellant upon the ground that they were liabilities of the McIntire Mercantile Company incurred prior to the formation of the partnership of McIntire & Middleton, and had not been ratified. Upon this motion the referee in bankruptcy reduced the claim of appellant to the sum of $15,920.34. Appellee took an appeal to the District Court, and the decision of the referee was affirmed as to the claims allowed, except two notes—one for $2,500, and the other for $4,000—the allowance of which by the referee was reversed. From this order and judgment the appeal to this court is taken.

The facts in the record may be briefly stated as follows: For a number of years prior to July 1, 1900, H. W. McIntire was engaged in business at Miles City, Mont. He afterwards adopted and used the trade-name of McIntire Mercantile Company, and continued the use thereof, as its sole proprietor, and as the owner of its entire stock in trade, until the formation of the partnership between himself and Fred F. Middleton. The new firm of McIntire & Middleton commenced to do business about July 1, but the articles of partnership were not reduced to writing and executed between the parties thereto until July 10, 1900. The agreement of partnership was produced at the hearing, and offered and received as evidence. From the terms thereof, it appears that the partnership was to continue for the term of five years; that the firm name was to be McIntire & Middleton, and they were to engage in the business of buying, selling, and dealing in all kinds of merchandise in Custer county, Mont., at wholesale and retail. Each of the partners was to bestow and give his full time, labor, skill, knowledge, and services to the business of the firm. At the time of the formation of this partnership the entire stock of goods, wares, and merchandise of the aforesaid McIntire Mercantile Company was the property of H. W. McIntire, its sole proprietor, and the same was to be taken over by the new firm of McIntire & Middleton. An inventory and valuation of this stock was to be made, and, when so made and ascertained, Middleton was to

Digitized by Google

acquire a half interest therein by the payment of $2,500 in cash, and executing to McIntire promissory notes for the remainder of the purchase price of said half interest. Middleton paid the $2,500 in cash, and the firm of McIntire & Middleton went into possession of the stock of merchandise. During the time McIntire was engaged in business, he became and was heavily involved in debt. Most of his indebtedness was held against him by the First National Bank of Miles City. Its form was promissory notes executed either in his individual name, or in the name of the McIntire Mercantile Company. About $20,000 of this indebtedness was in existence at the time of the formation of the firm of McIntire & Middleton. In the division of the work to be done by the partners in the firm, McIntire undertook to keep the books, and took sole charge and assumed control of the financial and accounting part of the business, and Middleton gave his attention to the management of the sale department.

The court below, in its opinion, said: "As to the notes for $2,500 and $4,000, respectively, which are claimed to be firm liabilities of McIntire & Middleton, and which have been allowed by the referee as claims against the estate of said bankrupts, it appears from the evidence that both of these notes are renewals of notes for the same amounts due to the First National Bank from the McIntire Mercantile Company. It is claimed that the firm of McIntire & Middleton assumed these liabilities of the McIntire Mercantile Company at the time of the formation of this firm. I fail to find sufficient evidence in the record to support this claim. No consideration appears to have passed from the First National Bank to McIntire & Middleton for such assumption. The fact that McIntire deposited the funds of McIntire & Middleton in said bank would not establish this. Certainly the act of assumption of the payment of these notes must be the act of all the partners. McIntire alone would have no authority, by virtue of his partnership relation with Middleton, to make such a contract."

T. J. Porter and Davis, Kellogg & Severance, for appellant.

O. F. Goddard, for appellee.

Before GILBERT and ROSS, Circuit Judges, and HAWLEY, District Judge.

HAWLEY, District Judge (after making the foregoing statement). The questions involved in this case must be determined upon the conclusions which should be drawn from the testimony as to whether or not the partnership agreed to be entered into between McIntire and Middleton was ever consummated by them in accordance with their agreement. Were the two notes referred to in the opinion renewal notes of the McIntire Mercantile Company, and, if so, were they ever authorized or ratified by Middleton, so as to be valid notes against the partnership, if one existed? In short, did the court err in its findings as to the evidence? Did it err in reversing the decision of the referee concerning the two notes—one of $2,500, and the other of $4,000?

The contention of appellant is (1) that the business of the firm of McIntire & Middleton was the continuation, without interruption, of a going business hitherto carried on by H. W. McIntire under the name of the McIntire Mercantile Company; (2) that the mode of conducting the business of the firm clearly shows an intention on the part of both members of the firm to assume all of the indebtedness of the McIntire Mercantile Company, including that represented by the notes; (3) that the evidence, under the rule of law applicable to such cases, is sufficient to require a finding that the indebtedness of the McIntire Mercantile Company, including that represented by the notes in question, was assumed by the firm.

Digitized by Google

The difficulties encountered and doubts entertained in endeavoring to ascertain the true facts are attributable to the lax methods and careless manner in which the business affairs of McIntire & Middleton were transacted. If business principles had been adopted at the start; if, after the terms of partnership had been agreed upon, an inventory of the stock of goods owned by McIntire had been taken, and the value thereof determined, and Middleton had given his notes in compliance with his agreement, and the books opened under the firm name of McIntire & Middleton, and an account opened with the appellant bank under the firm name—much of the mist of uncertainty which now exists would never have occurred. We are, however, compelled to deal with the testimony as we find it, unsatisfactory as it is, and determine, as best we can, the true inwardness of the transactions, and the rights and liabilities of the respective parties.

The contention of appellant that the partnership was never consummated cannot be sustained. The partnership agreement was in writing. Under it the parties commenced and conducted the business. The statement of facts shows that the partnership was an existing one. It was not, as appellant argues, "suspended in the air," because Middleton had never given the notes to McIntire for the amount due upon his purchase of a one-half interest in the stock of goods. These notes were not given because no inventory had been completed, and until that was done it could not be ascertained what the amount was. From the statement it is also shown that the two notes here in controversy were given as renewal notes of an indebtedness due from H. W. McIntire, individually, under the trade-name of the McIntire Mercantile Company. The national bank knew this to be the fact. McIntire knew it. Both so testified.

The pivotal point of dispute or conflict in the evidence is whether or not the firm of McIntire & Middleton assumed the payment of the indebtedness due by McIntire to the National Bank; secondly, whether the firm, in its methods of transacting business, did not justify such an assumption; and, thirdly, by its conduct ratify the acts of McIntire in giving the two notes in the firm name.

One transaction that is relied upon by appellant to support its contention that the firm of McIntire & Middleton assumed the indebtedness of the McIntire Mercantile Company to the appellant bank is that McIntire had promised appellant that, if the partnership of McIntire & Middleton was organized, it would pay appellant $10,000 very soon. Now, it appears that the State Bank, appellee herein, had been approached by McIntire, with the knowledge of Middleton, and conversations had with reference to the amount of money which appellee would agree to allow the firm to overdraw or loan if it should open an account and transact the firm's business through the bank, and the bank agreed to the sum of $10,000. McIntire very soon thereafter, in July, 1900, went to the State Bank and borrowed $5,000 on account of McIntire & Middleton, and took this money over to the National Bank, and there deposited it to the credit of the McIntire Mercantile Company. In December, 1900, or January, 1901, McIntire borrowed on account of McIntire & Middleton another $5,000 from the State Bank, and deposited it with the First National Bank to the credit of the Mc-

Digitized by Google

Intire Mercantile Company. It is not shown, except by inference from the evasive testimony of McIntire, that Middleton had any knowledge of how this money was to be applied. The extent of Middleton's knowledge in this matter, as shown by the record, is to the effect that he knew McIntire drew some money from the State Bank—as he supposed, to pay debts owing by the firm of McIntire & Middleton; he did not know that McIntire used the money, or any part of it, to pay the debts of the McIntire Mercantile Company.

There were certain checks drawn and notes given to the appellant bank, signed by the firm name of McIntire & Middleton, for debts due by the firm; and some of them, at least, were known by the bank to be for debts of the firm, which are relied upon to show an assumption of the debt due the bank by the McIntire Mercantile Company. The bank itself, by allowing these matters to be mixed up with the accounts of McIntire, and not opening an account with McIntire & Middleton, and keeping the accounts separate, contributed to the conditions of which it now seeks to avail itself. It could not have been misled upon its own irregular conduct touching these matters. Neither the appellant nor McIntire was able to give any sensible reason for the method adopted of keeping the accounts together.

Notwithstanding these facts, it may, for the purposes of this opinion, be conceded that there were two or three of these transactions, which, if taken by themselves, unexplained, without reference to other undisputed facts, might tend to support appellant's views. But it is our duty to take all the facts, the circumstances, conditions, and surroundings of the parties, their financial condition, and methods of drawing checks and depositing money, etc. If it was the firm's understanding that such indebtedness had been assumed, is it likely that Middleton, as a sane man, would have agreed to give his notes to McIntire for one-half of the inventoried stock of goods? The articles of copartnership stated "that the common stock of the partnership consists of money and merchandise of the full value of $30,000"; that "the shares of the said partners in the profits or loss of the business are and shall be equal." The half interest in this property would be worth say $15,000. For this Middleton had agreed to give his notes. Would he have agreed to do this if it was the understanding that the firm was to assume the individual indebtedness of McIntire?

The testimony shows that, when the partnership was talked about between them, McIntire told Middleton that his indebtedness was only about $10,000, and that he would be able to arrange that before July 1, 1900. The testimony also shows that McIntire's indebtedness was at that time, and at the time the partnership was entered into, over $30,000. Middleton was not aware of this indebtedness. The First National Bank, appellant herein, knew of this indebtedness of McIntire, because the greater part of it was then owing to the bank, and it knew of the formation and existence of the partnership between McIntire and Middleton; and it never made any inquiry whatever of Middleton as to whether the partnership had assumed the indebtedness of McIntire, but relied and acted solely upon the statement made to it by McIntire.

W. B. Jordan, the president of the First National Bank, testified that he was acquainted with both McIntire and Middleton, and was in-

Digitized by Google

formed of the transaction of their going into business together as partners; that about the time of the formation of the partnership he had a talk with McIntire about his business, as he was largely indebted to the bank. Among other things, he said:

"I advised Mr. McIntire to enter into this partnership, and that we would take them for the indebtedness of H. W. McIntire and McIntire Mercantile Company to the bank. His assurances to me were that, if the firm of McIntire & Middleton was formed, that they would pay $10,000 to the First National Bank very soon, and reduce their indebtedness right along. I left here in a few days, and when I came back the firm of McIntire & Middleton was in operation."

Upon his cross-examination:

"Q. Mr. Jordan, with what member of the firm of McIntire & Middleton was this conversation relative to the new firm of McIntire & Middleton assuming the debts of the McIntire Mercantile Company? A. With Mr. McIntire. Q. You never at any time talked with Mr. Middleton about that? A. No, sir. * * * Q. Mr. Jordan, can you tell why that account was continued in the bank under the name of the McIntire Mercantile Company after the new firm was formed? A. I cannot. It was simply allowed to run along that way, and I asked the cashier if there had been any change, and there had not been any. It was just going along the same as before."

McIntire corroborated the statements made by Jordan. Upon McIntire's cross-examination:

"Q. Now, I will ask you, Mr. McIntire, why you kept the account with the First National Bank of McIntire & Middleton in the name of McIntire Mercantile Company? A. I do not know that I had any particular reason for doing that. The necessity of changing it did not occur to me at all. Q. Wasn't it mentioned to you by Mr. Middleton once or twice? A. Not that I remember. Q. Didn't he call your attention to it, and ask you to change it, or to change the account to the State National Bank? A. I do not remember any such conversation. By the way, I do remember having— Mr. Middleton understood that the account was to go to the State National Bank, but, so far as my recollection serves me, there was no discussion of this account between Mr. Middleton and myself. Q. You can give no good reason why you kept this account in the way you did? A. No; I cannot."

Middleton testified that he never consented, authorized, or agreed in any manner to assume the indebtedness of McIntire to the National Bank, and that the partnership never assumed the indebtedness. With reference to the two notes here in controversy, there is no evidence tending to show that Middleton ever knew of their existence until about the time of the filing of the firm's petition in bankruptcy. There is no sufficient evidence in the record to sustain the contention of appellant that the firm of McIntire & Middleton ever assumed the indebtedness of McIntire, or the McIntire Mercantile Company, in its entirety, to appellant. The weight of the testimony clearly shows that the partnership never assumed the payment of the two notes which are involved in these proceedings, and never authorized the giving of the notes. Surely McIntire alone had no authority to make the contract of renewal. Appellant, having notice of the facts, was put upon inquiry, and is not in a position in the bankruptcy proceedings, as against a creditor or creditors of the bankrupt firm, to maintain its claim for the allowance of the two notes—one for $2,500, and the other for $4,000.

It is a well-settled rule of law that it is the duty of all the members of a copartnership to observe the utmost good faith toward each other

Digitized by Google

in all their partnership transactions. This rule becomes essential because the members of the partnership stand in a fiduciary relation to each other. 22 Am. & Eng. Ency. L. (2d Ed.) 114, and numerous authorities there cited. The doctrine thus announced bears upon the conduct of the appellant bank. Did it have the right to assume that the conduct and statement made by McIntire, as testified to by its president, were authorized by the members of the firm of McIntire & Middleton? Was it not then and there put upon notice that it was doubtful, to say the least, if McIntire was authorized to make such a statement? It had no knowledge that Middleton knew the amount of McIntire's indebtedness to the bank. The amount was so large as to cast suspicion upon the part of the bank and its officers, and put them on inquiry as to the truth of McIntire's statement.

In 1 Lind. on Part. p. 413, § 171, the author says:

"A person who knows that a partner is using the name or assets of the firm for a private purpose of his own knows that he is prima facie committing a fraud on his copartners. Therefore, notwithstanding the implied power of a member of an ordinary trading firm to accept bills or make notes, if one partner accepts a bill or makes a note in the name of the firm, and gives the bill or note in payment of a private debt of his own, the creditor who takes the bill or note, knowing the circumstances under which it has been accepted or made, will not be able to enforce it against the firm, unless it was in fact given with the authority of the other partners, which it is for the creditor to prove."

In McNair v. Platt, 46 Ill. 211, 213, the court said:

"As a general rule, one partner is not bound by the unauthorized acts of his copartner; but, from the very nature of a partnership, each member of the firm is presumed to have and has authority to bind the firm within the scope of the business of the copartnership. Beyond the scope of its business, authority to act must be shown, precisely as if any other person had performed the act, or the firm will not be bound. The application of partnership funds or property to the payment of a debt of one member of the partnership is outside of and beyond the scope of its business, and assent to such application must be shown, or a subsequent ratification proved, or the firm will not be bound."

It is unnecessary to multiply authorities upon this point. The books are full of cases where this principle is announced. There are none to the contrary. It was this principle that authorized the allowance of many of the accounts by the court that were included by the bank in the McIntire Mercantile Company. The fact is that the court allowed all the accounts that were proven in good faith to belong to the partnership of McIntire & Middleton; otherwise all the accounts should have been disallowed on the general principle that they were charged to McIntire alone, and the appellant bank did not upon its books appear to be a creditor of McIntire & Middleton. The court took an equitable view of this matter in order to reach the ends of justice, and recognized the appellant bank as a creditor of the firm, and entitled to share with other creditors to the extent that it had proven it was in fact a creditor of the firm. This equitable view, however, could not be extended to the transaction of the renewal of the two notes unless the firm had agreed to assume the indebtedness of the McIntire Mercantile Company, because the bank knew that the renewal notes were given for the private debt of McIntire. The law is well settled that one partner

Digitized by Google

cannot bind the firm by giving a note to pay his individual debt unless authorized so to do by his partner. Such a transaction is treated as a fraud upon the partnership. 1 Bates on Part. §§ 347, 509, and authorities there cited; Elkin v. Green, 13 Bush, 612; Lanier v. McCabe, 2 Fla. 32, 48 Am. Dec. 173; Thomas v. Stetson, 62 Ill. 537; Howell v. Sewing Machine Co., 12 Neb. 177, 10 N. W. 700; Bank of Scott City v. Sandusky, 51 Mo. App. 398, 401; Brobston v. Penniman, 97 Ga. 527, 25 S. E. 350.

In Shirreff v. Wilks, 1 East, 48, decided in 1800, Lord Kenyon, C. J., said:

"This is an action brought against three persons, Wilks, Bishop, and Robson, as acceptors of a bill of exchange. It appears that the acceptance was in fact made by Bishop alone in the name of the firm. The consideration for this bill was some porter which had been sold by the plaintiffs to Wilks and Bishop only, at a time when Robson had no concern with the house. Then the plaintiffs, knowing this, draw the bill upon all the three partners, and knowingly take an acceptance from one of them to bind the other two, one of whom, Robson, had no concern with the matter, and was no debtor of theirs; no assent of his being found, and nothing stated to show that he had any knowledge of the transaction. It is hard enough for one partner in any case to be able to bind another without his knowledge or consent, but it would be carrying the liability of partners for each other's acts to a most unjust extent if we suffered a new partner to be bound in this manner for an old debt incurred by other persons. The plaintiffs therefore ought not, in justice, to have taken this security, by which they were to bind one who was not their debtor. The transaction is fraudulent upon the face of it."

There is nothing in the course of dealing of the firm of McIntire & Middleton, irregular as it was, that could have misled the appellant bank, and induced it to accept the renewal notes under the belief that the firm had assumed the payment of McIntire's debt to the appellant bank.

In People's Savings Bank v. Smith & Co., 114 Ga. 185, 188, 39 S. E. 920, the court held that a partnership may frequently have drawn checks against its funds in bank for the purpose of discharging the individual debts of its members would not constitute such a course of dealing as would justify the bank in assuming that it was within the scope of the partnership business to pledge its credit and give its promissory note in satisfaction of a debt due by one of the partners to the bank.

In order to ratify the act of McIntire in giving the notes in question, it must at least have been shown that Middleton had knowledge thereof. The foundation upon which the principle of ratification is based is wanting in this case. In the very nature of the facts, as disclosed by the testimony, there could not have been any ratification upon the part of Middleton, for he never heard of the $2,500 note until a very short time before the proceedings in bankruptcy were instituted, and there is no pretense that he then consented to it. His first knowledge of the $4,000 note was at the first meeting of the creditors before the referee in the bankruptcy proceedings. In Reubin v. Cohen, 48 Cal. 545, the court held that the mere fact that a partner, upon being informed that his copartner had given a firm note for his individual debt, does not deny his liability thereon, does not per se amount, in point of law, to a ratification or adoption of the note.

Digitized by Google

Some reliance seems to be placed upon the point that it is the duty of the court to assume in this case that Middleton had access to the firm books, and obtained knowledge therefrom. Middleton testified that he could have had access to the books of the firm, but that he had never examined them. There was no evidence upon this point except the testimony of Middleton. No inference could therefore be drawn as to his knowledge of what the books contained. The books introduced in evidence in this case did not contain any entries with reference to the notes in question, and Middleton could not have obtained any knowledge in regard to them if he had examined the books. The ordinary presumption undoubtedly is that all the partners have access to the partnership books, and know of the entries therein; but this is a mere presumption from the ordinary course of business, and may be repelled by any circumstances which lead to a contrary presumption. United States Bank v. Binney, 5 Mason, 176, Fed. Cas. No. 16,791.

The judgment of the district court is affirmed, with costs.

(131 Fed. 430.)

FIRST NAT. BANK OF MILES CITY v. STATE NAT. BANK OF MILES CITY.

(Circuit Court of Appeals, Ninth Circuit. May 2, 1904.)

No. 1,016.

1. BANKRUPTCY—EFFECT OF APPEAL ON JURISDICTION OF DISTRICT COURT.
   Where an appeal has been duly taken and perfected under Bankr. Act July 1, 1898, c. 541, § 25a, 30 Stat. 553 [U S. Comp. St. 1901, p. 3432], from a judgment allowing or rejecting a debt, the district court is thereby deprived of jurisdiction to further consider matters involved in the appeal, and cannot entertain a motion for a rehearing so long as the appeal is pending.

Appeal from the District Court of the United States for the District trict of Montana.

In Bankruptcy. On motion to dismiss appeal.

T. J. Porter and Davis, Kellogg & Severance, for appellant.

O. F. Goddard, for appellee.

Before GILBERT and ROSS, Circuit Judges, and HAWLEY, District Judge.

HAWLEY, District Judge. This is an independent appeal in the case just disposed of. 131 Fed. 422.* The facts are that on August 17, 1903, the District Court rendered its judgment in the case upon its merits; that on August 25, 1903, the First National Bank, appellant herein, took and perfected an appeal from that judgment to this court; that on September 12, 1903—18 days after said appeal was perfected—it filed a petition, with affidavits in its support, and thereon moved the court for a rehearing upon the ground of alleged newly discovered evi-

¶ 1. Appeal and review in bankruptcy cases, see note to In re Eggert, 43 C. C. A. 9.

* 65 C. C. A. 406.

Digitized by Google

dence cumulative in its character. The court denied the rehearing, and from that order the present appeal is taken.

Appellee moves to dismiss the appeal on the grounds (1) that it is not an appealable order; (2) that it was made and entered after the appeal in the case was taken; (3) that by reason of the appeal the District Court had no jurisdiction to act upon the petition for rehearing during the pendency of said appeal to this court.

It is proper to state that the record herein shows that counter petitions and affidavits were filed by the appellee in the court below, that the cause was regularly submitted to the court, and that after consideration the court made the following order:

"Wherefore it is ordered and decreed that said petition for rehearing be, and the same hereby is, denied. And thereupon exception was allowed to the court's ruling, and the First National Bank of Miles City allowed fifteen days within which to prepare, serve, and file bill of exceptions."

So far as the record shows, it appears that the court disposed of the motion for rehearing upon its merits, and it does not affirmatively appear that it erred in so doing. It was certainly largely within the sound discretion of the court, and depended upon the views that might be taken of the facts contained in the case as originally tried and as presented in the petition. But, independent of these matters, the question of practice, as adopted in this case and raised by the motion to dismiss, is one that ought to be disposed of. The overwhelming weight of authority of the state courts is that an appeal, properly perfected, absolutely removes the case from the trial court, and places it in the appellate tribunal. The case must, of necessity, either be in the appellate or lower court. It cannot very well be in both courts at the same time. Such a course would lead to endless confusion. Under all the ordinary rules of practice, the appellate court alone would have the jurisdiction. After the cause leaves the lower court, it is deprived of taking any action upon any question involved in the appeal. Many of the authorities in the state courts upon this point are collected and cited in Elliott's App. Pro. § 541. The federal authorities are substantially to the same effect.

The precise point here raised has not been discussed in the national courts, because the practice adopted by appellant in this case is virtually unknown; but it has been incidentally referred to in several decisions to the effect that the decree in the District or Circuit Courts, when an appeal has been taken therefrom, is suspended until the appeal is disposed of. This rule is frequently stated in admiralty and other causes. The Collector, Wilmot, Claimant, 6 Wheat. 194, 203, 5 L. Ed. 239; Bronson v. Railroad Co., 1 Wall. 405, 409, 17 L. Ed. 616; The Lottawanna, 20 Wall. 201, 225, 22 L. Ed. 259; The S. S. Osborne, 105 U. S. 447, 450, 26 L. Ed. 1065; Ensminger v. Powers, 108 U. S. 292, 302, 2 Sup. Ct. 643, 27 L. Ed. 732; Hovey v. McDonald, 109 U. S. 150, 157, 3 Sup. Ct. 136, 27 L. Ed. 888.

In Bronson v. Railroad Co., supra, the court said:

"They having appealed from the decree, it would be against all reason and principle to permit them to proceed in the execution of it pending the appeal. They assert the decree is founded in error, and for that reason should not be executed, but should be reversed and corrected in the appellate tribunal. The appeal suspends the execution of the decree."

Digitized by Google

In Ensminger v. Powers, supra, the court said:

"While the appeal was pending here, although there was no supersedeas, the Circuit Court had no jurisdiction to vacate the decree in pursuance of the prayer of a bill of review, because such relief was beyond its control."

The decisions in the District and Circuit Courts are to the same effect. Morgan's Louisiana R. R. Co. v. R. R. Co. (C. C.) 32 Fed. 525, 530; Kimberly v. Arms (C. C.) 40 Fed. 548, 550; Citizens' Bank v. Farwell, 56 Fed. 539, 6 C. C. A. 30; Western W. S. Co. v. Drinnen (C. C.) 79 Fed. 820; Morrin v. Lawler (C. C.) 91 Fed. 693.

In Citizens' Bank v. Farwell, supra, the Court of Appeals said:

"After the cause had been thus removed into this court, the plaintiff in error appeared at a subsequent term of the Circuit Court, and filed a motion in that court to 'vacate, set aside, and annul the said judgment' on various grounds. This motion the court overruled, and thereupon the plaintiff in error sued out this second writ of error in the same cause, and assigned for error the overruling of said motion. The removal of the case into this court under the first writ of error transferred the jurisdiction of the suit to this court, and the jurisdiction of the lower court over the case was at an end."

In Morrin v. Lawler, supra, Thomas, J., said:

"When all the steps necessary to perfect an appeal to an appellate court have been properly taken, the action is within the control of that court, and the trial court should not engage in undoing or modifying the proceedings by which such jurisdiction has been obtained."

The appeal here taken is not authorized or sanctioned by any of the provisions of the bankrupt act, or by any rule or practice adopted by the courts in bankruptcy proceedings.

Section 25a, Act July 1, 1898, c. 541, 30 Stat. 553 [U. S. Comp. St. 1901, p. 3432] provides:

"That appeals, as in equity cases, may be taken in bankruptcy proceedings from the courts of bankruptcy to the Circuit Court of Appeals of the United States * * * (3) from a judgment allowing or rejecting a debt or claim of five hundred dollars or over. Such appeal shall be taken within ten days after the judgment appealed from has been rendered."

It was by virtue of these provisions that the first appeal was taken. In the petition for a rehearing it was stated that the matters upon which a rehearing was asked were discovered "since the suing out an appeal in this court, and that, if a rehearing of this cause is granted by the court, petitioner will dismiss such appeal, and diligently prosecute its said claim before this court upon such rehearing." This was not sufficient. If appellant desired its petition for rehearing to be passed upon by the court below, it should have dismissed the appeal it had previously taken to this court. The authorities cited by appellant are to the effect that by so doing it would not have lost its right to take an appeal after the final action of the court below upon the petition for rehearing. In re Wright (D. C.) 96 Fed. 820; Stickney v. Wilt, 23 Wall. 150, 23 L. Ed. 50. Appellant cites Devries v. Shanahan, 122 Fed. 629, 58 C. C. A. 482, but that case only decides that the Court of Appeals, where the record is imperfect, may return the same to the District Court for correction. In re Abraham, 93 Fed. 767, 782, 784, 35 C. C. A. 592, is based on facts entirely dissimilar to the case at bar. The appeal was there taken from an order that was not appealable, and the Court of Appeals, in the exercise of its discretion, permitted the appellant, in lieu

Digitized by Google

of his appeal, to file a petition for revision of the proceedings in the District Court. The only cases we have found where the appellate courts have considered or reviewed any question presented by a petition for a rehearing or review in bankruptcy cases is where the matter was presented under section 24b of the bankruptcy act (Act July 1, 1898, c. 541, 30 Stat. 553 [U. S. Comp. St. 1901, p. 3432]). In re Rouse, Hazard & Co., 91 Fed. 96, 33 C. C. A. 356; In re Eggert, 102 Fed. 735, 43 C. C. A. 1; In re Derby, 102 Fed. 808, 814, 42 C. C. A. 637; In re Fisher, 103 Fed. 860, 43 C. C. A. 381, 51 L. R. A. 292. But in these cases it was held that no such rehearing or review could be had where the appeal is taken under the provisions of section 25a. The general consensus of opinion is that, section 25a having provided a means to review by appeal three kinds of judgments, every other means is excluded. Coll. on Bk. (4th Ed.) p. 267; Brand. on Bk. §§ 604, 605; In re Good, 3 Am. Bankr. R. 605, 99 Fed. 389, 39 C. C. A. 581. The taking of an appeal deprives the court of bankruptcy of jurisdiction to further consider matters involved in the appeal.

Appeal dismissed.

(131 Fed. 433.)

THE ADMIRAL SCHLEY.

THE CHARLES F. MAYER.

(Circuit Court of Appeals, First Circuit. July 6, 1904.)

Nos. 513, 514.

1. COLLISION—TUG WITH LONG TOW—DUTY TO EXERCISE EXTRAORDINARY CARE.

   The rule reaffirmed that a tug with a long tow navigating the New England coast will be held to the exercise of extraordinary care, in the interest of common safety.

2. SAME—DANGEROUS SITUATION CREATED WITHOUT NECESSITY.

   A vessel may be in fault for a collision in a fog which would not have occurred but for her being in the usual track of vessels leaving a port, where she was there without necessity, although, if it had been in the line of her voyage, she might have been within her right, and not chargeable with fault.

3. SAME—CONTRIBUTORY FAULT—PRESUMPTION.

   The rule that where one vessel is shown to have been clearly in fault, without which a collision would not have occurred, the other vessel is to be presumed not in fault, is artificial and misleading unless very carefully applied. The rule may operate in reverse directions according to which vessel's faults are first considered.

4. SAME—RIGHT TO ASSUME OBEDIENCE TO RULES BY OTHER VESSEL.

   Also what is sometimes stated as a rule to the effect that a vessel which has come into collision had a right to proceed on the assumption that the other vessel would perform her duty has a limited effect, and is likewise misleading, unless very carefully applied, and it does not reach the circumstances of this case.

5. SAME—MANEUVERING WITH TOW IN FOG—UNNECESSARILY DANGEROUS POSITION.

   A steamer, with two coal barges in tow on a line, the whole 2,300 feet in length, deeming it unsafe to enter Boston Harbor because of a dense fog, continued to move slowly about with her tow between the lightship and the harbor entrance, crossing a number of times the usual path of steamers leaving the port, which was known to her master. While mov-

Digitized by Google

ing away from the harbor on a course nearly parallel to such path, and just as she had changed her course across it, she heard the signals of a vessel coming out, but did not change her course, and a collision between the two steamers resulted. The outgoing vessel was clearly in fault for excessive speed, but was misled by the course of the tows which she passed, which were still on a course practically parallel with her own. *Held*, that the towing vessel was also in fault for loitering with a tow of such dangerous length in the known way of outgoing vessels without necessity, it not being shown that she could not as well have kept her steerageway by maneuvering further out to sea, or to one side, which fault was aggravated by her failure to change her course back on hearing the other vessel, whose course she had reason to believe she was crossing; the rule prohibiting such change of course in a fog not being applicable under the circumstances.

Appeal from the District Court of the United States for the District of Massachusetts.

For opinion below, see 115 Fed. 378.

Edward S. Dodge and J. Walter Lord (Frederic Dodge, on the brief), for appellant.

Eugene P. Carver (Edward E. Blodgett, on the brief), for appellee.

Before COLT and PUTNAM, Circuit Judges, and ALDRICH, District Judge.

PUTNAM, Circuit Judge. These appeals arose out of a collision between the steamers Admiral Schley and Charles F. Mayer. The Admiral Schley was a packet steamer bound from Boston to Jamaica. The Charles F. Mayer was a powerful tug, bound into Boston, with two barges in tow, with a total length of tug and tow of about 2,300 feet. The collision was off Boston Harbor, in a thick fog. The District Court held both in fault. There is now no question that the Admiral Schley should be regarded as in fault, which fault, on account of her extreme speed and lack of proper lookout, was grievous. Neither is there any question that her fault contributed to the collision. Indeed, it was the prime cause. The only issue before us is whether the Charles F. Mayer was also in fault.

With reference to tugs with long tows on our New England coast, we have in several instances laid down the positive rule which applies here. In The Berkshire (decided June 23, 1896) 74 Fed. 906, 910, 21 C. C. A. 169, we said that we did not know that we would be authorized to deem as unsafe the use of a narrow channel by a tug, with its tow on a hawser of customary length, more than by a large propeller of considerable draft and speed; but in The Gladiator, 79 Fed. 445, 446, and 447, 25 C. C. A. 32, we also said that we must hold tugs which navigate the New England coast, with long and peculiarly hazardous tows, to the use of the extremest care, in the interest of common safety. We reaffirmed this proposition in the Mt. Hope, 84 Fed. 910, 912, 29 C. C. A. 365, The Samuel Dillaway, 98 Fed. 138, 141, 38 C. C. A. 675, and The Gertrude, 118 Fed. 130, 131, 55 C. C. A. 80. The same rule is held by the Circuit Court of Appeals for the Second Circuit in The H. M. Whitney, 86 Fed. 697, 700, 30 C. C. A. 343.

In disposing of these appeals, we rely on nothing except what is admitted by the Charles F. Mayer, or is shown by official publications

Digitized by Google

of the United States, including their charts, and list of lights and fog signals, or by facts commonly known. When we use the word "mile," we mean a nautical mile. Boston Light, Thieves' Ledge Buoy, and Boston Lightship are very nearly in line. The Lightship bears E. ½ S., 5 15/16 miles, from the Boston Light; Thieves' Ledge Buoy is about two miles easterly from the Light, and about four miles westerly from the Lightship; and Minot's Ledge Lighthouse bears from the latter 4⅛ miles S. by W. ¼ W. There is an abundance of water in the easterly part of the triangle made by the Boston Light, Boston Lightship, and Minot's Ledge, and, of course, an abundance of water seaward thereof.

The Charles F. Mayer admits that the fog, at all the times necessary to consider, was thick. One expression used is: "The fog being still very thick." Another is: "The fog shut down thick again." It is also natural that a steamer coming out of Boston, as the Schley was, in a fog, would endeavor to pick up the Lightship. Consequently, Capt. McLeod, master of the Charles F. Mayer, admits that such a steamer would usually go near, or head towards, Boston Lightship, if she could hear its whistle, whenever bound for Cape Cod, the West Indies, Europe, New York, Baltimore, Philadelphia, or any ports to the south, or, in fact, going through Vineyard Sound. He testifies, however, that a vessel going to Gloucester, Portsmouth, Portland, Halifax, or other ports easterly, would pick up Thieves' Ledge Buoy, if she could, and take her course northerly from that. It is a matter of common knowledge that the navigation which would pick up Boston Lightship, as stated by Capt. McLeod, is by far the larger portion of that sailing from Boston, and is very large at all portions of the year. Consequently, a vessel crossing the line from Boston Light to Boston Lightship of E. ½ S., would directly across the more largely traveled path.

The collision occurred between Boston Lightship and Thieves' Ledge Buoy; Capt. McLeod placing it about a mile to the west of the Lightship, and the master of the Schley about a mile and a half to the east of Thieves' Ledge Buoy. The admitted point of collision demonstrates that the course of the Schley, coming out of Boston, must have been as described by Capt. McLeod for vessels bound southerly; that is, picking up the Lightship. At the same time, the position of the Mayer, as worked out by ourselves, was as follows: Capt. McLeod thus describes his movements, so far as we need notice them: He was running a course S. S. E. about half past 11, when, the fog having begun to lift, and thinking it would have cleared up by the time he reached the entrance to the harbor, he turned on a course N. W. by W. ½ W., and passed the Lightship close on his starboard hand. Thus he ran northerly of the bearing from the Lightship to the Boston Light, and therefore across, and northerly of, the course that would be taken by a vessel outward bound for Jamaica. In other words, he brought himself so that he and his tow, in all, as we have said, covering about 2,300 feet, was crossing the path of all the navigation bound as we have described. At half past 12, however, the fog shut down thick again, and he turned back on a course E. by S., which, about 10 minutes afterwards, he changed to E. by N. to pass a schooner on his starboard

Digitized by Google

bow. During these maneuvers, and to the time the Schley was heard, about 15 minutes after turning on the course E. by N., the speed of the tug was maintained at about one knot and one-half per hour. After turning on the E. by N. course, she prepared to shorten hawsers, and commenced to swing her head to port on a course N. N. E. When she had swung three or four points on the last turn, Capt McLeod heard a sound abaft his port beam, which he could not clearly identify as a whistle. A minute later, a fog signal of a steamer was heard, still abaft the port beam, which was reported by the lookout. Shortly after, the Schley loomed up about 500 or 600 feet away, heading for the Mayer's pilot house, and on her port. What followed related to vessels in extremis, and we need not pursue it.

We have stated these facts for the purpose of showing with detail how the Charles F. Mayer, with her long tow, was moving slowly across the course of navigation out of Boston, bound to Europe or southerly, as Capt. McLeod explained it and understood it. This course, as we have shown, was substantially E. by S. The course of the Charles F. Mayer, before she made her turn in order to shorten hawsers, was, as we have said, E. by N.; and she was, therefore, crossing the path of navigation at an acute angle. After she began her last turn, to come on the course of N. N. E., she was running across the path of navigation out of Boston at an angle nearing seven points, and therefore practically at a right angle to it. Of course, she was properly proceeding very slowly, and was required to do so; but, unfortunately, her care in this respect endangered the particular position she was in, so that, in this sense, we may say she was loitering. It needs nothing in addition to the mere statement of these facts to demonstrate that for this tug and her long tow to be in the position in which she was at the time of the collision was presumptively not only a fault, but a gross fault; and this is especially so, in view of our rule already referred to, and last stated in The Gertrude. That this presumptive fault contributed to the collision cannot be denied, because the collision could not have occurred if the Charles F. Mayer had not been crossing this path of navigation, and perhaps not if she had not been loitering thereon. Under these circumstances, the burden rests on her to clearly justify her locality, if she can do so.

The Charles F. Mayer claims that it was necessary for her to keep on steerage way during the thick fog, because, on account of the heavy weather, it was impracticable for her to anchor in that neighborhood; and it may be that the well-known facts of the locality, supplemented by her evidence, sustain this proposition, but this in only a general way. It would not justify her keeping under way in an improper locality. She also asks whether she would have been in fault if she had been crossing, as she was crossing, but in the direct line of her voyage, assuming that she had been bound for some Northern port; and whether the circumstance that, instead of being in the line of her voyage, she was maneuvering as she was maneuvering, constitutes any essential distinction. The distinction is that, if in the line of her voyage, she would ordinarily have been within her right, although on a hypothetical question no one can answer positively. If within her

Digitized by Google

right, it would follow that ordinarily she would have been entitled to avail herself of it, though it involved danger to others.

It has not been specially pressed upon us that the Charles F. Mayer found it prudent to keep her bearings and thus retain knowledge of her position; but we may reasonably suppose that such was the fact. Nevertheless, even on this supposition, it was her duty to show us clearly that she could not have accomplished this by making use of some other lights or signals within reasonable range. Indeed, she has offered no specific proof on this topic, not even to show that it was needful for her to keep her bearings, as we have suggested, or that she might not prudently have run out to sea. In the absence of anything of this nature, the common knowledge of that part of our coast, and especially the presumption that the Mayer might have sufficiently preserved her bearings while remaining southerly of the path of navigation, and in the easterly part of the triangle of which we have already spoken, made by Boston Light, Boston Lightship, and Minot's Ledge Lighthouse, leave the case resting heavily against her with reference to this class of suggestions.

The Mayer relies on The Umbria, 166 U. S. 404, 17 Sup. Ct. 610, 41 L. Ed. 1053, in which case she claims it was decided that, as the Umbria was running under an excessive speed of about 20 knots, the alleged fault on the part of the Iberia, with which steamer she collided, could not be taken into account. But the fact is that a majority of the court held the Iberia was not in fault, while the other justices were of the opinion that, if she had been in fault, the fault did not contribute to the collision. Therefore the decision is not effectual here. We have sufficiently expressed our views of The Umbria in The Columbian, 100 Fed. 991, 994, 41 C. C. A. 150, and in The Gertrude, 118 Fed. 130, 132, 55 C. C. A. 80, where we said that the Iberia was in extremis from the moment she heard the signals of the Umbria. However, it is impossible to concede that there is any analogy between a tug like the Charles F. Mayer, "loitering" with her tow, and a steamer like the Iberia, which, at least, was endeavoring to escape by some action on her own part.

We are not prepared to condemn the Charles F. Mayer for not giving special signals, because it is settled law that, unless in extreme cases, to give signals not called for by the international rules may be a fault; and especially, under circumstances like those at bar, of a thick fog, with numerous vessels in the neighborhood, such signals may produce confusion. The Oregon, 158 U. S. 186, 200, 201, 202, 203, 15 Sup. Ct. 804, 39 L. Ed. 943. We appreciate the fact that, under the circumstances, the master of the Mayer came suddenly into a thick fog off Boston Harbor, and thus was brought unexpectedly into a difficult position; and we do not overlook the fact that, in a condition of maritime difficulty, the question is not necessarily whether the commanding officer made an error, but merely one of good seamanship. We have expressed this with reference to very peculiar circumstances in The Carbonero, 122 Fed. 753, 755, 58 C. C. A. 553. However, the error of the Mayer was so glaring that no claim of good seamanship can save her. Indeed, Capt. McLeod seems not to have relied so much on his own judgment as on what he regarded as a custom, in accordance with which it was the practice of tows to maneuver as he did in that locality

Digitized by Google

in a fog. Therefore these appeals do not raise so much a question of seamanship as they press upon us anew for our consideration one of the various practices of vessels in thick weather, both steamers and sailing vessels, some of them in violation of the international rules, which the courts are so frequently compelled to condemn.

We have shown that, just before the Charles F. Mayer heard the Schley coming out from Boston, she starboarded her helm, coming on the N. N. E. course, and continued to keep a starboard wheel, notwithstanding her master, Capt. McLeod, knew, or at any rate supposed, that the Schley was running towards her. The Schley, in her libel, distinctly charged this as a fault; also, in her answer to the libel in behalf of the Mayer, it is alleged that the Schley first saw one barge heading in the same direction as herself, and again a second barge still proceeding on the same parallel course, and that then, suddenly, she saw the Mayer crossing her path from starboard to port. The course of the barges would tend to mislead the Schley as to the supposed course of the tug, unless she was very attentive to lookout and signals. The testimony in behalf of the Mayer admits the substance of this. Nevertheless, Capt. McLeod continued to keep under his starboard wheel, and thus to complete a cul-de-sac in which the Schley was trapped; while, if he had ported his wheel when he first heard the Schley, and brought himself in line with his tow, he would have given the Schley more sea room, and the collision would have been avoided, as the Mayer merely caught the Schley's starboard quarter about 50 feet from her stern.

It is doubtful whether these steamers, under the circumstances, were in such a condition that the Mayer was bound by the international rules with reference to keeping her course; and it is still more difficult to determine what is the effect of these international rules when a vessel, being overtaken, is already under a port or starboard wheel. Indeed, so far as they are concerned, it is said in Marsden's Collisions at Sea (4th Ed.) 381, as follows:

> "An alteration of the helm in a fog, when the other ship cannot be seen and only her whistle is heard, is not necessarily negligence, though it is made merely upon a guess as to the distance, course, speed, and direction of the other ship. As a general rule, in such circumstances, a ship should not alter her course; but each case must depend upon its own circumstances, and it cannot be laid down that every alteration of course, in ignorance of the position and course of the other ship, is in itself a fault."

The author in this particular is fully sustained by The Vindomera (1891) A. C. 1, where the syllabus, which correctly represents the decision, uses practically the same language as Mr. Marsden. Nevertheless, although the international rules do not literally apply, and although the fact that the Mayer kept her starboard wheel after she heard the whistle of the Schley was not her primary fault, yet it certainly aggravated it, and aids to expound and measure it as a serious one.

Two propositions have been brought to our attention incidentally, if not directly, namely: First, that as the case shows that the Schley was clearly guilty of a gross fault, the Mayer is presumed not to have been in fault; and, second, that the Mayer was proceeding slowly, with perfect discipline, as was the fact, while the Schley was moving rapidly in a thick fog, without discipline, and this to such an extent that she failed to hear the signals from the Mayer, all of which is

Digitized by Google

also true. It is said consequently that, if the Schley had had a proper lookout, or had been proceeding with the required care as to speed, the collision could not have occurred, which is also true. Therefore it is suggested that the Mayer was not bound to anticipate that a steamer would come out of Boston committing such gross faults as were exhibited by the Schley, so that the Mayer cannot be charged because she did not guard against the possibility of this occurring. The first proposition, which is often stated by the authorities, is artificial, and is misleading unless very carefully applied. In ordinary cases, it would operate in reverse directions, according to which vessel's faults are first considered in ascertaining the causes of the collision. So far as the second is concerned, the rule is also artificial, and also, unless applied very carefully, misleading. The Schley had as much right to assume that the Mayer would not be loitering on the path of navigation, and to govern herself accordingly, as the Mayer had to assume that the Schley would not violate the international rules. The authorities, however, which have used this proposition, have had a very limited effect.

They may be illustrated by The Servia, 149 U. S. 144, 153, 13 Sup. Ct. 817, 37 L. Ed. 681, and the cases there cited, and by The Victory and the Plymothian, 168 U. S. 411, 426, 18 Sup. Ct. 149, 42 L. Ed. 519. The decisions named, and nearly all the cases cited by them, bear against the Mayer, instead of in her favor, because each turns on the assertion that one vessel was bound to anticipate that the other would take the course customarily taken by her. In each, the vessel expected to take the customary course failed to do so, so that the other vessel was exonerated. On the present appeals, however, the Mayer disregarded the presumption which the cases cited state, to the effect that vessels usually take known customary courses, which presumption, as applied to the present collision, charged the Mayer with the special duty of avoiding the Schley, and other vessels coming out of Boston, by the customary path. However, this topic is correctly disposed of by the statement which we have already made that the Schley was under no more obligation to assume that the Mayer would violate maritime rules than the Mayer was to assume that the Schley would do the same. If the second proposition were acceded to generally, there would hardly ever be a division of damages on account of the faults of both vessels involved in a collision, and it is only under extreme circumstances that it can possibly have any application. We must refuse to admit it here.

On the whole, these appeals seem to be within the practical rules applied by the Circuit Court of Appeals for the Second Circuit in The H. M. Whitney, 86 Fed. 697, 701, 30 C. C. A. 343.

In No. 513, The Admiral Schley, the decree of the District Court is affirmed, and the appellee recovers its costs of appeal.

In No. 514, The Charles F. Mayer, the decree of the District Court is affirmed, with interest, and the appellee recovers its costs of appeal.

Digitized by Google

(131 Fed. 440.)

JABINE et al. v. SPARKS, Presiding Judge, et al.

(Circuit Court of Appeals, Sixth Circuit. July 6, 1904.)

No. 1,301.

1. APPEAL AND ERROR—FINAL DETERMINATION.

The case coming on to be heard on plaintiffs' demurrer to defendant's return in a mandamus proceeding, the court made an order, and plaintiffs excepted to so much of it as ordered the appointment of a collector of taxes without first ordering the removal of the sheriff. Thereafter plaintiffs filed a reply to defendant's return, and the court required defendant to file a rejoinder in a certain time. *Held*, that the court had allowed further pleading, so that its order, which would have become final had plaintiffs stood by their demurrer, was not a final determination authorizing a writ of error.

In Error to the Circuit Court of the United States for the Western District of Kentucky.

D. M. Rodman, for all plaintiffs in error.

John A. Pitts, for plaintiff in error Frank C. Guthrie.

W. L. Reeves, for defendants in error.

Before LURTON, SEVERENS, and RICHARDS, Circuit Judges.

SEVERENS, Circuit Judge. This is a proceeding in mandamus instituted in the court below by the plaintiffs in error to enforce the payment of judgments obtained by them against Muhlenberg county, one by John N. Jabine on June 30, 1893, for $4,065.72, with interest and costs; and the other by Eva Murray on January 26, 1894, for $16,193.12, with interest and costs. These judgments were founded, respectively, upon bonds and interest coupons issued by the county on March 1, 1869, in payment for its subscription for stock of the Elizabethtown & Paducah Railroad Company under the authority of an act of the Kentucky Legislature passed March 5, 1867 (2 Acts 1867, p. 253, c. 1689), which chartered the company, as amended by a further act passed February 24, 1868 (1 Acts 1867–68, p. 622, c. 548), enabling certain counties, of which Muhlenberg was one, lying along the route of the railroad, to purchase stock, and issue its bonds in payment therefor to the railroad company. It was provided in the act that it should be the duty of the county judge of each county in which the voters should elect to make such subscription, and which should issue its bonds therefor, to levy taxes upon all the assessable property in the county sufficient to pay the principal and interest on such bonds as they should become due. For several years the county paid the semiannual interest due on the bonds in due season, but in 1874, it repudiated the debt, and has ever since refused to pay the bonds, either the principal or the interest falling due thereon, notwithstanding the validity of the bonds and the obligation of the county to pay them has long since been judicially established.

Having obtained their judgments as aforesaid, the plaintiffs endeavored to secure the making of a levy of a tax by the county judge sufficient to pay their judgments. But all such applications were refused by the said county judge, and all legal proceedings taken for

Digitized by Google

the purpose of compelling him to perform this duty have been resisted. Without reciting further particulars than are necessary to the disposition of this writ of error, it must suffice to say that on January 27, 1897, the plaintiffs secured an order of the Circuit Court, which was affirmed by this court on a writ of error sued out by the county judge, for a peremptory writ of mandamus to the said county judge requiring him to make a levy of taxes on the county sufficient to pay their judgments, and deliver it to the sheriff of the county for collection. Eventually he made the levy. But the sheriff refused to give the bond required by law, and collectors were appointed, one after another, but they, too, refused to qualify. At length, on June 18, 1901, a motion was made based on an affidavit of the attorney for the plaintiffs stating the facts exhibited by the record and the changes which had occurred in the circumstances, for a further writ to order another levy upon the assessment of 1900 which was then current. This motion was denied upon the grounds that it should have been made upon petition, that it was not shown by the affidavit that any demand for such a levy had been made upon the county judge, and that the averments of the affidavit were vague and insufficient. Thereupon the plaintiffs at the November term, 1901, filed a petition, styled in the record "an amended and supplemental petition," and renewed their motion for an additional levy. The motion was again overruled. In May, 1902, the plaintiffs moved the court to require a return to the writ of mandamus which was entered in 1898 on the receipt of our mandate. This motion was overruled. Then, at the November term, 1902, the plaintiffs filed a further "amended and supplemental petition" charging that Sparks, the county judge, had not complied with the writ of mandamus of 1898; that he had continually refused to remove the sheriff and appoint a collector, and that the tax had not, therefore, been collected during any of the years which had elapsed; that Sparks, the county judge, had not made any return of his doings under the writ, and refused to take any steps whatever toward the fulfillment of the orders therein contained. They nominated one George S. Allison, a citizen of Kentucky, as collector, and prayed that the said county judge might be ordered to make return to said writ, that he be required to remove the sheriff from office and appoint Allison collector. The court sustained the motion so far as to require the county judge to make a report of "what he has done under the order entered herein on the 7th day of June, 1898." The county judge thereupon made a return setting up various grounds and reasons why the petition of the plaintiffs should not be granted, among them that it was not the duty of the sheriff to collect the taxes on the levy made in February, 1896, and that he (the county judge) was not authorized to require him to do so, or to remove him from office for a refusal to give bond for making such collection. Upon the coming in of this return the plaintiffs demurred thereto upon the ground that it did not present any defense to the petition, and was evasive and insufficient. The case came on to be heard upon the demurrer, and, as the record states, upon the plaintiffs' motion for a further writ of mandamus; whereupon the court, apparently basing its action upon all the petitions which had been filed in this behalf, filed its opinion upon the whole matter shown there-

Digitized by Google

by and by the return of the county judge, and entered the order following:

"The motion of the plaintiffs for a writ of mandamus requiring an additional levy is overruled, to which plaintiffs except. It is further considered and adjudged by the court that the defendant, Thos. J. Sparks, as county judge of said county, and sitting as such, shall within twenty days from the entry of this order give and allow to the sheriff of said county upon notice in writing an opportunity to qualify, if he will, by executing bond according to law for the collection of the levy made under the mandamus herein, and if within said twenty days said sheriff shall fail or refuse to do so the said county judge, sitting as the presiding judge of the county court of said county, shall enter an order declaring such failure or refusal, and shall thereupon appoint George S. Allison as collector of said taxes, but without otherwise removing said sheriff from office. When the said Allison, if appointed collector, shall have given a good and sufficient bond for the faithful discharge of his duties and containing such other stipulations as may be required by law, the county judge shall, at the expense of Muhlenberg county, furnish to said collector all proper tax books or lists showing all the particulars of said levy in due form of law, in order that the said Allison may proceed to collect the said taxes."

To this order the plaintiffs excepted as follows:

"To which the plaintiffs each except to so much of said order as orders the appointment of the collector without ordering the removal of the sheriff preceding the said appointment."

On the day following, which was November 24, 1903, the plaintiffs filed a reply to the beforementioned return of the county judge, in which they controverted many of the statements made therein; and the court ordered that the time for filing a rejoinder therein be extended until March 1, 1904. As the court had already rendered its decision upon the facts appearing upon the plaintiffs' petitions and the return of the county judge on the hearing of the demurrer, the filing of this reply, and the order of the court entered thereon, are explainable only upon the hypothesis that the plaintiffs regarded the order of the court upon the merits as one based upon the pleadings as they then stood, and claimed that they were entitled notwithstanding to take issue upon the return of the county judge, and that the court recognized that right, or, at all events, consented to reconsider the matter upon a further showing. Upon this state of facts it is contended for the defendants in error that the order of November 23, 1903, was not final, and that this writ of error is premature. We think there is no escape from this conclusion. If the plaintiffs had chosen to stand by their demurrer to the return of the county judge, the order would have become absolute and final. But instead of this they elected to plead further, and filed a reply. The court had required the respondent to rejoin thereto within a time fixed. In this condition of the case the plaintiffs sued out their writ of error. If the plaintiffs had first obtained leave of the court to withdraw their reply and to stand by their demurrer, it may be that the writ of error could then have been sued out. It is too plain to require the citation of authority that there had been no final determination of the suit or motions of the plaintiffs, and there is no alternative but to dismiss the writ of error.

An order must be entered accordingly.

Digitized by Google

(131 Fed. 443.)

GUTHRIE v. SPARKS, Presiding Judge, et al.

(Circuit Court of Appeals, Sixth Circuit. August 2, 1904.)

No. 1,307.

1. COUNTY RAILROAD BONDS—LEVY OF TAX FOR PAYMENT—KENTUCKY STATUTE.

Those provisions of Act Ky. Feb. 24, 1868 (Laws 1868, p. 622, c. 548), authorizing counties to issue bonds in payment for railroad stock, which made it the duty of the county judge to levy taxes for the payment of the principal and interest of such bonds, were not repealed by the new state Constitution of 1891, which continued the county courts, and also created fiscal courts in each county; nor by subsequent legislation thereunder embodied in the Kentucky Statutes of 1894, which devolved on the fiscal courts the duty of levying county taxes for general purposes, but expressly provided by section 1882 that the powers conferred should not extend to the levying of taxes to pay principal or interest of any railroad bond indebtedness. The effect of such provision was to leave the duty of levying such taxes, which is a purely ministerial one, resting upon the county judge.

2. SAME—REPEAL OF STATUTE BY IMPLICATION.

Ky. St. 1894, § 1882, which confers power on the fiscal court of each county to levy taxes for county purposes, but expressly excepts the power to levy a tax to pay any railroad bond indebtedness, or the interest thereon, is not repealed by implication as to such exception by section 1839 in the same chapter, which was originally enacted at a later date, and authorizes such courts to levy ad valorem taxes not exceeding a certain per cent. unless required to pay county indebtedness incurred prior to 1891, in which case they are authorized to make an additional levy therefor. Such provisions were not only brought together and re-enacted in the general statutes, but are capable of standing together, effect being given to the special exception created by section 1882.

3. MANDAMUS—PROCEEDING TO ENFORCE COLLECTION OF JUDGMENT—PARTIES.

Act Ky. Feb. 24, 1868 (Laws 1868, p. 622, c. 548), authorizing counties to issue bonds in aid of railroads, requires the county judge to levy taxes to meet the principal and interest of such bonds as they mature, and also requires the sheriff to collect such taxes, and to give a bond therefor, within 30 days after the levy shall have been made, providing that, if he fails to give such bond, he shall be removed from office by the judge, who shall appoint a collector. *Held*, that in a proceeding for a writ of mandamus to compel the levy of a tax to pay a judgment recovered on such bonds the sheriff was properly joined, although no duty would devolve on him until the levy had been made, where it was alleged that he had pledged himself not to give the bond or make the collection; and that, in case he should refuse to give the bond, the writ should require the judge to remove him, and appoint a collector to enforce the collection.

In Error to the Circuit Court of the United States for the Western District of Kentucky.

John A. Pitts and D. M. Rodman, for plaintiff in error.

W. L. Reeves, for defendants in error.

Before LURTON, SEVERENS, and RICHARDS, Circuit Judges.

SEVERENS, Circuit Judge. This case, like that of Jabine v. Sparks (No. 1,301) 131 Fed. 440,* and heard together with that, is a

¶ 2. Repeal of statutes by implication, see note to First Nat. Bank v. Weidenbeck, 38 C. C. A. 136.

¶ 3. Mandamus to compel payment of judgment against municipality, see note to Holt County v. National Life Ins. Co., 25 C. C. A. 475.

* 65 C. C. A. 424.

Digitized by Google

proceeding to enforce by mandamus the levy and collection of a tax on the assessable property in the county to satisfy a judgment recovered by the plaintiff in error on June 1, 1895, against the county, in the court below, for the sum of $8,148.09, with interest and costs, upon bonds running for 20 years, with coupons for interest issued by the county March 1, 1869, under the authority of the Acts of the Kentucky Legislature of 1867–68. The act of February 24, 1868, made it the duty of the county judge to levy taxes upon the property in the county for the purpose of paying the bonds authorized by the act, and the interest thereon as they should become payable. After paying the interest until the year 1874, the county repudiated the bonds, and refused to make further payment thereon, either of principal or interest, and has ever since refused to pay them, or to pay the plaintiff's judgment, which was for some of said bonds. The county judge has refused to make any levy to pay the judgment. An execution issued on the judgment was returned nulla bona, and the plaintiff has no remedy except that of a writ of mandamus to compel the levy and collection of a sufficient tax. The issue of the bonds by the county was in payment for stock of the Elizabethtown & Paducah Railroad Company, subscribed for and taken by the county under the authority of said act of February 24, 1868 (Laws 1867–68, p. 622, c. 548), and the validity thereof and the obligation of the county to pay the bonds has been repeatedly declared by the state and federal courts, and, as above stated, the bonds of the plaintiff were merged in the judgment of June 1, 1895.

On March 21, 1903, the plaintiff in error here, Guthrie, filed in the court below his petition making the defendants in error, Sparks, the county judge, Blackwell, the sheriff, and the county of Muhlenberg respondents therein, and alleging the recovery of his judgment, the issue of an execution, and its return unsatisfied; that it was the duty of the county judge to levy a tax for the payment of the bonds on which his judgment rested, but that the county judge had refused to levy such tax, and had never levied any tax to pay the judgment; that at a session of the county court recently held at the county seat the plaintiff had made a demand upon the respondent Sparks, county judge, to make the levy of a tax to satisfy his judgment; and that said respondent refused to make any levy. The petition further set forth that it was the duty of the sheriff to collect all taxes levied under the authority of said act of February 24, 1868, and recited a Kentucky statute requiring the sheriff to give bond for the collection of taxes, and declaring that, if he failed to give the same within 30 days after levy of the tax, he should forfeit his office, and the court should have power to appoint a collector, who should have the powers of a sheriff in making such collection; and in reference to him (the said sheriff) the petition stated that he "announces and gives out in his speeches that he will not give bond and qualify to collect any tax levied under said act"; and that in a similar case pending in the same court the sheriff had refused to give bond for more than 30 days, but that the county judge nevertheless refuses to remove him. And, finally, the petition stated that the general tax bills would go into the sheriff's hands about July 1, 1903, and, if no one should qualify to collect the tax to pay the judgment before the end of the May term of the court, other state and

Digitized by Google

county creditors might acquire a preference over the plaintiff in the collection of their claims. The prayer of the plaintiff was that a mandamus issue whereby the respondent Sparks, as county judge, should be required to make the levy, and that this should be done in time for the levy to go in the current tax lists of 1902 (stating the particulars of the proposed directions), and "that the said county judge, sitting as the county court aforesaid, be commanded and directed in said writ to order that the present sheriff of said county, W. D. Blackwell, if he be then in office, give bond, qualify, and proceed to collect said levy; if the said Blackwell be not in office at the time said levy is ordered, that the officer or person acting in his place as sheriff be ordered to qualify, give bond, and proceed to collect said levy, and to pay over to the plaintiff the amount of his judgment and costs, and the balance, if any, to be held subject to the orders of said defendant county court; and, in the event that the said sheriff, Blackwell, or other officer taking or acting in his place, shall fail or refuse to give bond, qualify, and proceed to collect said levy, that the said defendant county court be ordered to forfeit the office of said sheriff or other officer, remove him from office, and to continue said orders and removal until a collector is found who will give bond, qualify, and collect; and, in the event that after the removal of said sheriff such other officer shall fail and refuse as aforesaid and be removed, that the said defendant county court be required to appoint some citizen of the state of Kentucky named by plaintiff, and otherwise qualified, and allow him to give bond, qualify, and collect said levy; that the said defendant county court be further commanded that in making the appointment of a collector in the event of the removal of the sheriff or other officer, that said collector need not be a resident of Muhlenberg county, but may be a resident of any part of the state of Kentucky, otherwise qualified; that the defendant county court be commanded to do and perform all the above duties without unnecessary delay, and that he be required to make his return to the said writ, and show what he has done thereunder, at some day during the coming May term of this honorable court, or at a called term thereof; and he prays for all such further orders and writs as he may be entitled to enforce the collection and payment of his said judgment." On May 4, 1903, Sparks and Blackwell appeared, and filed separate demurrers, each of which was stated to be for the reason that the petition did "not state facts sufficient to constitute a cause of action against him." The matter came on to be heard the same day, but the court, not being advised, took time. On November 23, 1903, the court delivered its opinion. The question which the court had been considering, and which was deemed the turning point in making its decision, was whether, in the then state of the statute law of Kentucky, the county judge, sitting as the county court, was authorized to levy the proposed tax, or whether that duty had been devolved upon the so-called "fiscal court" of the county, consisting of the county judge and the several justices of the peace of the county associated with him. The learned judge was of opinion that the authority to make the levy was vested in the fiscal court, and not in the county court represented by the county judge, and sustained the demurrers of the county judge and of the sheriff. The plaintiff then amended his petition by stat-

Digitized by Google

ing that the justices of the peace of the county were hostile to the levy of any tax, and could not be brought together to consider the matter; that the county judge had declared that he would not call them together; that the fiscal court is only required to have two sessions in each year; that it has power to change the time of meeting, and cannot be called together except by the county judge; and that by reason of the evasions of the members of the fiscal court he would be without any practical remedy. The county judge and the sheriff renewed their demurrers. The court sustained the demurrers and dismissed the petition upon the same ground as he had sustained the previous demurrers. Some other considerations were advanced, to which we may refer later. The writ of error brings the order dismissing the petition here for review.

In Meriwether v. Muhlenberg County Court, 120 U. S. 354, 7 Sup. Ct. 563, 30 L. Ed. 653, decided in 1887, it was held by the Supreme Court, following in that regard the decisions of the Kentucky Court of Appeals, that the duty of levying taxes under the provisions of the act of February 24, 1868, was a ministerial duty, which was devolved by the act upon the county court represented by the county judge, and not the county court called the "court of claims," consisting of the county judge and the justices of the peace of the county, and charged with the duty of laying the county levy, appropriating money, and transacting other financial business of the county. By the Constitution of Kentucky adopted in 1891 and the legislation of the assembly during the years following its adoption, certain changes were made in regard to the powers and duties of the county courts, and it is contended for defendants in error that these changes have resulted in transferring the duty of levying the taxes required by the act of 1868 from the county judge to the "fiscal court" of the county as it is now called. For the plaintiffs it is contended, first, that if it was intended to make this substitution, the new remedy is so uncertain and insecure that the change amounts to an impairment of the obligation of the contract of the county with the holders of its bonds; but, second, that in fact no such transfer of this particular duty was contemplated by the convention or by the Legislature in ordaining the provisions referred to. We pass by without deciding the first of the propositions of the plaintiffs thus stated, for the reason that we are of opinion that their second proposition is correct. By section 140 of the new Constitution it was ordained that there should be a county court in each county, and by section 141 that:

"The jurisdiction of the county court shall be uniform throughout the state, and shall be regulated by general law and until changed shall be the same as now vested in the county courts of this state by law."

Then section 144 provides that:

"Counties shall have a fiscal court, which may consist of the judge of the county court and justices of the peace, in which court the judge of the county court shall preside if present, or a county may have three commissioners to be elected by the county at large, who together with the judge of the county court shall constitute the fiscal court. A majority of the members of said court shall constitute a court for the transaction of business."

Inasmuch as the new Constitution was to take the place of the old one, these provisions simply continued the old courts, bestowing upon the

Digitized by Google

court of claims a title which would always have better described it. In regard to taxation, section 171 provided that "all taxes shall be levied and collected by general laws." Stress was laid upon this provision by the court below and by counsel in argument here, as if it established a new rule of taxation which had the effect to extinguish all inconsistent laws. But this is clearly a mistake. The convention did not intend to arrest the levy and collection of taxes under existing laws, but that the Legislature should enact general laws for the levy and collection of taxes, after which, and by consequence whereof, they would be levied, etc., by general laws. But with respect to this particular law it was impossible that the Constitution should have repealed it. It did not nullify this statute when it declared that statutes inconsistent with it should be void at that time or at some future time unless the Constitution should provide a certain equivalent; and this the Constitution did not do. It supplied no new remedy, and, if the old was not continued, there would have ensued a complete lapse of the obligation of the contract, with a prospect that perhaps some remedy would be supplied by future legislation. With respect to the obligation of a municipality, the substance of its value consists of the means provided for its enforcement; and it is no more possible for the people, by a provision of their Constitution, to impair the obligation of such a contract, than for a Legislature of a state. But we have no need to pursue this line of discussion further. We have referred to the established rule upon the subject as a reason for believing that the framers of the new Constitution did not intend to disturb this then existing law, and, if there were nothing more, we should have no hesitation in concluding that this was a law which was not presently repealed. But to guard against all misapprehensions, and to assure the preservation of existing rights, it was provided in a schedule which dominated this subject that "all rights, actions, prosecutions, claims and contracts of the state, counties, individuals or bodies corporate, not inconsistent therewith shall continue as valid as if this Constitution had not been adopted." The holders of these bonds had a right, and a remedy which was the essence of it, secured by a preexisting law. We are not concerned now with the question whether it was permissible to supply an equivalent remedy, for we are seeking only to ascertain the meaning and intent of the Constitution. Section 59, under the title "Legislative Department," declared that the General Assembly shall not pass local or special acts to authorize or regulate the levy, the assessment, or collection of taxes. But this was a restriction upon future legislation, and in no wise impaired the validity of former laws, or the rights secured under them. This would be so even without the express declaration above quoted. For these reasons we think it entirely clear that the Constitution in no wise disturbed or affected the operation and effect of the act of February 24, 1868. But it is contended that, if the Constitution did not repeal that act, the subsequent enactments of the General Assembly did have that effect. We may say once for all that, so far as the subject of discussion is concerned, no subsequent legislation was had which would not have been equally valid if the new Constitution had not existed.

The Constitution directed that the Governor should appoint three commissioners to revise the statute laws and prepare amendments to

Digitized by Google

conform them to the Constitution, and that such revision and amendments should be laid before the next General Assembly for adoption or rejection in whole or in part. This was done. The General Assembly at its next session passed acts on different dates, and then finally assembled them with other statutes by revision in one whole, which was denominated the "Kentucky Statutes of 1894." On April 18, 1892, an act was passed containing the following provisions:

"The court of claims or levy or fiscal court of each county in this commonwealth is hereby authorized to levy and collect a poll and ad valorem tax to pay off the existing current indebtedness and to defray the current and necessary expenses of the respective counties of the commonwealth of Kentucky. But this act shall not be construed so as to authorize the court of claims or any fiscal court of any county to levy a tax to pay any railroad bond indebtedness of any interest on any such indebtedness. That the poll tax shall not exceed $1.50 on each male person of the age of twenty-one years or more residing in the county. The ad valorem tax shall not exceed fifty cents on the $100.00 worth of taxable property assessed in the county." Acts 1891–92, p. 40, c. 26, § 1.

And on October 17, 1892, another act of that Legislature was passed reading as follows:

"The fiscal courts shall hold their sessions at the county seats of their respective counties, and shall have jurisdiction to levy each year for county purposes a poll-tax on each male inhabitant of the county over twenty-one years of age not exceeding one dollar and fifty cents, and an ad valorem tax on all property subject to taxation within the county, whether belonging to natural persons or corporations, companies or associations, not to exceed fifty cents on each one hundred dollars in value thereof as assessed for state purposes, unless an additional tax be required to enable the county or taxing district thereof to pay the interest on and provide a sinking fund for the extinction of indebtedness of the county or district created prior to September twenty-eight, one thousand eight hundred and ninety-one, and for that purpose the fiscal court shall have jurisdiction to levy such additional tax as may be authorized by law in force prior to September twenty-eight, one thousand eight hundred and ninety-one, and shall superintend the collection of all such tax." Acts 1891–92, p. 270, c. 101, § 7.

Both these enactments were carried into the revision by the same Legislature, and are found in the same chapter 52 (Ky. St. 1894), under the title "Fiscal Courts." In the following order, in that chapter, section 1833 provides that the fiscal court in each county shall consist of the county judge and the justices of the peace. Section 1834 provides "that unless otherwise provided by law, the corporate powers of the several counties of the state shall be exercised by the fiscal court thereof, respectively." Then in section 1839 is the above-quoted provision of the act of October 17, 1892. Section 1840 confers similar, but no more specific, authority; and section 1882 is the foregoing quotation from the act of April 18, 1892. It is contended for the respondents that section 1839, having been originally passed at a later date than section 1882, repealed the same by implication, and upon this assumption that one is a later act than the other, the rule of construction which is supposed to be applicable to statutes holding that relation is invoked. We doubt, however, whether upon this assumption the later statute, which simply confers a jurisdiction in general terms, would repeal an act which so specifically denied jurisdiction in a particular class of cases. There is room for both statutes to have a field of operation, the special

Digitized by Google

statute in the particular cases and the general statute in the cases not thus eliminated; for it is not doubted that a county may have many other kinds of indebtedness than "railroad bonded indebtedness." But we do not think the rule sometimes applicable to a special act succeeded by a general one should be applied here. The general rule is that an act which relates to a particular subject is not repealed by a later one which is general in its terms, but would include the particular case if that were not already provided for. The exception to this rule is that, if it plainly appears that the later general statute was intended to cover the particular case, and hold sway in place of the former act, the latter must be regarded as repealed by implication. But, as repeals by implication are not favored, the intent to repeal must "plainly appear." And it is manifest that it cannot be said that the intention to repeal is clearly shown when the general statute by its own terms admits of exceptional cases where other provision is made. The above-stated rule has been applied in a great number of cases by the Supreme Court of the United States, and the exception in some. The cases most nearly in point here are State v. Stoll, 17 Wall. 425, 21 L. Ed. 650; Ex parte Crow Dog, 109 U. S. 556, 3 Sup. Ct. 396, 27 L. Ed. 1030; Chew Heong v. United States, 112 U. S. 536, 5 Sup. Ct. 255, 28 L. Ed. 770. But the revision of 1894 was a single body of statutes, and all its parts were brought in and re-enacted. Each chapter and all related parts having reference to any given subject treated are deemed to be a fresh expression of the law. We think, therefore, that chapter 52 should be construed as if it were a single enactment. All parts of it are to be deemed to have been under the eye of the Legislature when that body put it together and enacted it, and we believe that in such case the authorities upon the subject of statutory construction are generally agreed that the special declaration will stand for the special matter, and the general provision will cover all other matters not thus set apart, or, if there be none such, then, of course, both cover the same territory, and that part of the statute last written will prevail. Sutherland on Statutory Construction, § 153; Commonwealth v. Huntly, 156 Mass. 236, 30 N. E. 1127, 15 L. R. A. 839; Smith v. The People, 47 N. Y. 330; State v. Rotwitt, 17 Mont. 41, 41 Pac. 1004.

Then again it is to be borne in mind that section 1834 excludes from the powers of the fiscal court those cases where it is provided otherwise by law. If this means already provided by law, the present case would be excluded from this grant of power. If it does not mean that, but means (as we think most likely) such provision as might be made in that revision or by some subsequent enactment, this case would also be excluded. Again, the powers of the fiscal court are of a discretionary nature, requiring the exercise of judgment upon questions of expediency, and this is the reason why the justices of the peace of the county are brought in to aid the county judge by their counsel. And when it is said that that court shall have jurisdiction to levy taxes, more than the mere ministerial performance is intended. The amount of the taxes, and how much for the several purposes of the county, and in what year each tax should be raised—in short, the management of the fiscal affairs of the county—is delegated to it. But the levy of the tax required by the act of 1868 was a ministerial duty, for the discharge of

Digitized by Google

which there was no occasion for the exercise of the functions of the fiscal court. As was observed by Mr. Justice Harlan in Meriwether v. Muhlenberg County Court, supra:

> "It is clear that the levy and collection of a tax to meet a county subscription to the stock of a railroad company is not a business connected with the laying of the county levy, or with appropriations of money out of said levy."

There was, therefore, no reason that we can see which should have moved the Legislature to transfer this duty from the county judge, to whom it then belonged, to the fiscal court, unless it was the merely fanciful one of creating uniformity; and that this was not a dominating purpose is shown by the exclusion from the powers of the fiscal court of such matters as were otherwise provided for by law. It was of no consequence to the county who should perform the duty. It was simple and absolute. The only consequence would be that the change might afford better means for embarrassing the creditors. Not only is it not permissible to attribute such a purpose, but we find, on the contrary, abundant evidence that the Legislature had no thought of disturbing vested rights or rendering them less secure. So by section 1057, chapter 35 of the same revision, the Legislature did not confine the power of the county court to the matters enumerated, but gave to it "such other jurisdiction as may be conferred upon it by law." And when, by section 1882, power was denied to the fiscal court "to levy a tax to pay any railroad bonded indebtedness," the law of 1868 conferring the power upon the county judge continued unrepealed, for there was no other law which furnished any remedy for enforcing payment of the bonds. Indeed, the distribution of the powers granted to these courts of the county, with the reservations contained in said grants, when construed and applied to the conditions then existing, as they should be, would, we think, retain the power here in question in the county judge.

Conceding that it would be in the power of the Legislature to change the system of levying and collecting taxes in the state, providing an equivalent substitute for the former method is supplied, and assuming that a grant of power to the fiscal court to make a levy and order the collection is the equivalent of a command to the county judge to do it, we are nevertheless of opinion that the Legislature did not intend to divest the power of the county judge to make the levy of taxes and order their collection granted by the act under which the bonds in suit were issued. We are not aware that the proposition now advanced by the respondents has the support of any adjudication of either the state or federal courts, but it is not wholly new. It was put forward by Fleming, the county judge who preceded the respondent Sparks, in his response to the alternative writ of mandamus issued by the court below in the case of Jabine et al. against him and the county, as a reason why he should not be required as county judge to make the levy. The response was held by Judge Barr to be insufficient, and was overruled. The opinion which he filed does not exhibit any discussion of the point, but the judgment necessarily determined that the legislation referred to did not take away the power to make the levy. The record of that case, brought into this court by writ of error, exhibited this defense, and it lay at the root of the whole proceeding. Notwithstanding this

Digitized by Google

the order of the Circuit Court was affirmed. No opinion was written, but the judgment here could not have been rendered if the respondent was not the proper person to be coerced by the writ. That judgment was between other parties, and so, of course, is not an estoppel. But it is in some sense a precedent.

The court below, in its opinion, expressed its view to be that:

"As to Blackwell, the sheriff, the petition is manifestly premature. No levy having been made, his refusal to qualify was 'in the air.' Certainly nothing has as yet arisen to make it his duty to give the bond required of him by the act, or to collect a levy which has not been made."

But it was distinctly decided otherwise by the Supreme Court in Labette County v. Moulton, 112 U. S. 217, 5 Sup. Ct. 108, 28 L. Ed. 698, where it was held proper to join in the writ those officers who were charged by law with the performance of successive duties required in the levying and collection of the tax. As soon as the levy has been made and tendered to him for collection, the sheriff's duty at once becomes imperative to proceed to give the bond, to qualify himself, and to collect the tax. That was a duty he took upon himself when he assumed his office. If he will not do that, the act of February, 1868, declares he shall forfeit his office and the county judge is required to declare the forfeiture, and thereupon to appoint a collector, who, if he accepts the appointment, must give the bond, and thereupon has the powers and duties of the sheriff in making the collection. It is argued for the respondents that when the sheriff has, upon his entrance into office, given the bond required of him to qualify himself, that bond secures the performance of every duty cast upon him as sheriff, and the further bond required of him when he comes to collect a tax is a cumulative security, and that it is only the failure to give the original bond which justifies his removal from office; and Schuff v. Pflanz, 99 Ky. 97, 35 S. W. 132, is cited, which hardly sustains the proposition contended for. But, assuming the general law as it now exists to be as contended, that in no wise relieves the stress of the obligation of the fifteenth section of the act of 1868, which declares that, if the sheriff will not give the bond, he shall forfeit his office; and this law, as we have held, has not been repealed. It would seem that, if the machinery for collecting the tax has been changed to such an extent as the contention just noticed would indicate, the question whether an equivalent remedy has been provided might become serious; but we have proposed to pass that question.

It was held in Jabine et al. v. Sparks, supra, by Judge Barr, whose ruling was affirmed by this court, that, if the sheriff should refuse to give the bond required by the fifteenth section of said act of 1868, the county judge should remove him, and then proceed to appoint a collector. The course of proceeding there marked out should be followed here.

The order dismissing the plantiff's petition will be reversed, with costs, and the Circuit Court will be directed to overrule the respondents' demurrer, and to proceed in conformity with law, and not inconsistently with this opinion.

Digitized by Google

(131 Fed. 244.)

IDEAL STOPPER CO. et al. v. CROWN CORK & SEAL CO.

(Circuit Court of Appeals, Fourth Circuit. July 12, 1904.)

No. 517.

1. PATENTS—ANTICIPATION BY PAPER PATENT—IDENTITY OF IDEAS.

In determining the question of identity of the inventive idea involved in two patents, it is not a sufficient answer to say of an alleged anticipation that it was a mere paper patent, and that the device had never been operative or commercially successful, because prior existing conditions may not have stimulated full development.

2. SAME.

A patentee cannot be denied invention because of a prior patent for a device which never came into use, unless the idea upon which his patent is predicated is so clearly set forth or suggested in the alleged anticipating patent that a mechanic with such patent before him could by the exercise of mere mechanical skill so modify proportions or change the mode of operation as to overcome the difficulties which excluded the prior device from commercial utility.

3. SAME—BOTTLE STOPPERS.

The Painter reissue patent, No. 11,685 (original No. 540,072), for a bottle stopper, which consists of a cup-shaped disk of material having a permanent flexion, which is inserted in the neck of the bottle and there expanded into a groove having a shoulder below, and in which a gasket has been placed, thus making a tight stopper, was not anticipated by the British patent to Young, No. 12,247 of 1848, which does not cover a stopper, but merely a disk designed to be expanded on the top of a cork or other stopper, to hold the same in place, performing the function of the wiring otherwise used for that purpose.

Appeal from the Circuit Court of the United States for the District of Maryland.

For opinion below, see 123 Fed. 666.

Philip Mauro (Reeve Lewis and Joseph C. France, on the brief), for appellants.

John C. Rose and Robert H. Parkinson, for appellee.

Before GOFF, Circuit Judge, and BRAWLEY and PURNELL, District Judges.

BRAWLEY, District Judge. The patent in controversy is that which was considered by this court in Crown Cork & Seal Company v. Aluminum Stopper Company, 108 Fed. 847, 48 C. C. A. 72. Of that decision the learned counsel for appellants say:

"We assent absolutely to every legal doctrine stated and applied in that decision, and find in it the full sanction and authority for every proposition upon which we rely. The sound principles and logical reasoning of that decision, applied to the state of facts as they are presented, led necessarily to the upholding of the patent. Applied to the actual state of facts, embracing the Young patent as part of the prior art, they lead of necessity to the opposite conclusion."

It thus appears that the single question presented by this appeal is whether the Young British patent discloses and anticipates the alleged invention of the Painter patent. It was decided adversely to the de-

¶ 1. See Patents, vol. 38, Cent. Dig. § 73.

Digitized by Google

fendants in the court below. We held in the former case that Painter's patent was—

"A distinctly original conception, so essentially unlike anything in the prior art that nothing earlier has been presented to us out of which the defendants could read the invention of the patent or either claim of it. There was no known device which could be converted into the Painter invention by any improvement short of rejection of the entire plan. The answer of defendants, it is true, stated that this patent was void for want of novelty, and referred to the prior invention of Young in Great Britain in 1848. This was urged by Hall's attorneys upon the attention of the officials of the Patent Office in opposition to the granting of the reissue, and was held by the board of examiners in chief not to exhibit the Painter invention; and the defendants' own expert, Lorenz, testified that the Young patent was not a practical or operative device, and seems so far to have satisfied the learned counsel for defendants on that point that Young's patent was not introduced in evidence."

Young's patent is now before us, and the appellants' case rests upon the proposition that there is "substantial identity of the inventive idea of the Young patent with that of the Painter patent," and the argument of the appellant is that every element or feature of the Painter device is found in the Young patent. If that is true, Painter is not entitled to be considered as a pioneer, as having disclosed a primary invention, and the decision of the court below should be reversed; for the evidence shows that the appellee company, the assignee of Painter, has a practical monopoly of certain bottle-stopping devices, and it would be unjust in principle and highly injurious in its consequences to the public to sustain its exclusive privilege, unless it is clearly established that Painter was the pioneer in this art, for this would tend rather to obstruct than to stimulate invention, which is the great object of the patent laws. If the original conception of that method of stopping bottles, for which his patents were granted, was not his; if the principle of the alleged invention, with all its undeveloped possibilities, is found in previous patents or rested in public knowledge, and he has done no more than extend the original thought by a change only in form, proportion, and degree; if he has carried forward another's conception by a new and more extended application of it; and if the essence of his patents is in doing substantially the same thing in substantially the same way, only providing such improvements or modifications as a mechanic conversant with the art could effect by skill or ingenuity—it would follow that he would be entitled only to patents upon his improvements, and would not be entitled to shut out others from the enjoyment of those improvements which the same or greater skill may have achieved. In other words, if the inventive idea was Young's, and not Painter's, and Painter had simply improved upon Young's conception, and if any skilled mechanic could take Young's patent and by a combination of the same elements, differing merely in degree or in detail, or in the substitution of equivalents, could produce a bottle stopper substantially the same as Painter's, merely varying the form of mechanism, but without involving any of Painter's ideas, then it would follow that Young was the pioneer in this art, and not Painter. But if the entire scheme of Painter is radically different from that of Young, and if, in construction, operation, purpose, and result, the invention set forth in Painter's patent is not responsive in terms or substance to the Young construction, and the same or nonequivalent elements are not used in substan-

Digitized by Google

tially the same way to produce the same result, and no mechanical skill working upon Young's plan could ever produce the same result that Painter accomplished, then it would follow that the inventive idea was different, and any modification or improvements worked out upon Painter's idea must be tributary to it. The question to be decided is mainly one of fact, and, whatever doubt there may be as to the correctness of our conclusion, there is no doubt as to the legal principle which should govern it.

Robinson, in his work on Patents (sections 272, 892, 893, 894, and cases cited), states the principle:

> The test of the question of identity in the inventive idea is whether "the compared inventions perform the same functions by the same modes of operation. If the effects produced are substantially different, there is no identity. If the effects are the same, and the functions are essentially distinct, there is no identity. If the functions are the same, and the modes of operation by which they are performed are radically unlike, there is no identity. Contrariwise, where the effects are identical, the functions identical, and the modes of operation identical, the ideas embodied in the two inventions must also be identical."

In determining the question of identity of the inventive idea, it is not a sufficient answer to say of any alleged anticipation that it was a mere paper patent, and that the same had not been operative or commercially successful; for prior existing conditions might not have stimulated full development. To discover the inventive idea that was in Young's mind, we naturally look to his statement of invention and to the drawings intended to illustrate it, for that is supposed to embody his ideas. We do not mean that Young's invention is necessarily limited to his own conception of its possibilities. Columbus would not be the less entitled to be considered to have discovered America because, when he set out on his voyage his object was, not to discover a new continent, but a new route to an old one; and if Young gave to the world an invention which was intended for one purpose only, yet which so clearly suggested the thought which afterwards bore fruitage in Painter's invention and which required only a more deft mechanic to develop it, then Young might justly be considered the pioneer in the art of inventing bottle stoppers, and Painter would be entitled only to such improvements as his mechanical skill wrought upon Young's invention. The line which separates invention from mechanical skill is at best a narrow one, and the difficulty of demarkation in this case is enhanced by the fact that of necessity we look upon Young's invention with eyes instructed by Painter's and other subsequent patents, and must take care that we do not in such light so reconstruct Young's patent as to see in it those possibilities which may seem very obvious now, but which may not have been disclosed by the patent itself; for, vague and uncertain as may be the line of demarkation between mechanical skill and invention, we could not deny Painter the right of invention, unless the idea upon which his patent is predicated is so clearly set forth or suggested to Young that a mechanic, with Young's patent before him, could by mere mechanical skill so modify proportions or change the mode of operation as to overcome the difficulties which excluded the prior device from commercial utility, and thus make fruitful the inventive idea which before was futile, merely through lack of the mechanical skill needed for its development.

Digitized by Google

Young's British patent, No. 12,247, August 21, 1848, contains the following statement of invention:

It "consists of employing discs of sheet metal raised into a conical form, so as to reduce the diameter in order to their entering the mouth or neck of such vessels, and then by causing them to be pressed so as to assume a flat form, they will retain the cork or other elastic stopper securely in the necks or mouths of such vessels. Figure 7 shows part of a section of a spirit can; figure 8, the plan thereof; figure 9 shows the section of a bottle or such like vessel; and figure 10 shows a disc of metal before and after it has been raised into a conical form. In these arrangements the cork or other elastic stopper enters the neck or mouth of the vessel, and rests on the shoulder, b, b, and is retained and pressed securely by means of the disc, which is introduced in the conical form, that then is to be caused to spread out and become flat by pressure, so that the edges will enter the groove around the neck or mouth, as shown by the drawing. By this arrangement the cork or stopper cannot be drawn out without the power equal to that required for bending the disc of metal."

Figure 9, showing the bottle neck, and figure 10, showing the metal discs, will be copied here from page 653.

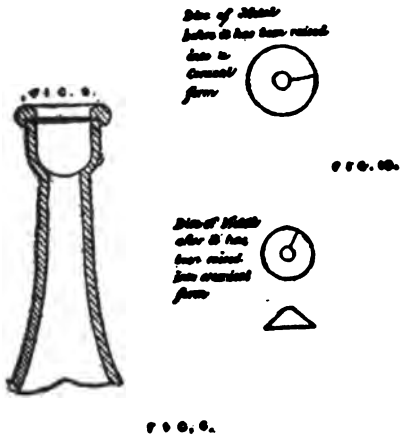

A plain man, uninstructed by the learning of experts, reading the terms of the specifications and the drawing corresponding to those terms, would see in them a disc of sheet metal intended to hold the cork in its place as a substitute for the wire caging theretofore used for that purpose. There is no suggestion for providing any substitute for the ordinary cork stopper, nothing to indicate that the cork or stopper was to act in any manner different from the ordinary way, or that the disc of sheet metal was designed for any other purpose than to retain the cork in its place. No new method of stoppering bottles was claimed or suggested. The bottle was to be stopped by a cork or other elastic stopper, entering its neck in the old way and operating in the old way; the only thing that is new being the disc of metal that is to hold it in its place. It proceeds upon the theory that a cork or other elastic stopper is necessary, and provides only against its expulsion by a device in substitution for the old cork retainer of wire or other method applied on the outside of the bottle neck. In short, his invention consists, not of a new stopper, but of a new method of retaining the old stopper in its

Digitized by Google

place. That this disc, so operating, is all that there is in Young's patent, all that is claimed, and all that an inspection of the drawing shows it to be, is confirmed by its history. It has been before the world for more than half a century, and obviously the world did not want it; for it has not used it, although it has been free to do so for many years.

We have stated what we think would be the conclusions of the ordinary intelligence as to Young's inventive idea, drawn from the reading of the specifications and from the inspection of the drawing; but there are certain mysteries in the patent law that the ordinary mind cannot penetrate, and we must seek illumination from the experts. Unhappily we cannot accept without reservation the opinions of the experts who have been examined as witnesses, for they are necessarily partisans of the side calling them, and essentially advocates, and their opinions are contradictory, and tend to perplex, instead of elucidating, although they appear to be gentlemen of great ability and deserved eminence. But we have in the record before us the opinion of some experts whose testimony cannot be impeached because of interest. We refer to the trained officials of the Patent Office, who had the same question before them, and substantially the same arguments, when Hall filed his petition of interference on Painter's application for reissue, on the ground that Painter had been anticipated by Young. One of the primary examiners, Mr. Witherspoon, who has been examined as an expert by the defendants in this case, sustained this contention; but he was overruled by the unanimous judgment of the Board of Appeals. The case was exhaustively presented and carefully considered. We referred to these proceedings in our former opinion, and it is not necessary to repeat what was then said. The final decision of the board of examiners was that the "British patent cited has not this type of stopper, and does not include its elements operating in the same way to produce the same result."

In the former case one of the defenses set up in the answer was that Painter's patents "are void for want of novelty, because the contrivance described and shown therein was, prior to William Painter's alleged invention thereof, patented to Mr. Young in the United Kingdom of Great Britain and Ireland, August 21, 1848, in letters patent No. 12,-247." When that case came on to be heard this prior patent was not introduced in evidence; but it was before the court as part of the proceedings of the Patent Office, growing out of Hall's interference, and did not escape our attention. There is an implication, rather than a suggestion, that there was something suspicious, if not sinister, in the failure of the defendants in that case to introduce this patent in evidence. It would surely have been as good a defense there as it is claimed to be here, and the omission to present it naturally calls for explanation. That it was due to lack of acumen and zeal on the part of defendants' counsel can hardly be successfully claimed. This court bears willing witness to the ability and earnestness with which the defense in that case was conducted. Mr. Walker, the leading counsel for the defendants, and the author of the well-known text-book on Patent Law, seemed to us to have explored the whole domain of the patent law to find weapons of assault upon the Painter patent, and all the learning on that subject was exhausted. That Painter's claim with-

Digitized by Google

stood these assaults seemed to us to be due to the fact that it stood upon an impregnable foundation. Inasmuch as certain testimony was offered by the defendants in this case in explanation of the reasons for the abandonment of this defense, Mr. Walker was called by the complainants as a witness in rebuttal, and testified as follows:

"No ulterior reason, or any reason aside from my judgment of want of merit in the Young defense, had any influence in causing that defense to be omitted from the evidence in the Aluminum Case."

Copies of his correspondence while engaged in preparing for the defense, giving in detail the reasons for this conclusion, are in the record, from which it appears that after repeated experiments by the expert, Mr. Lorenz, and after thorough analysis by Mr. Walker himself of the mechanical points which he found to be involved in the question, and a thorough study of the Young patent, he reached the conclusion that Young's combination was practically useless because it did "not provide any way to guide its conical disc into its groove fully and firmly enough to enable it to exert any material resistance to any tendency that the cork may have to be forced out of the bottle by pressure within the bottle." In his letter of February 2, 1899, he says:

"We find, on experiment, Young's cork will not expand his disc into its groove when it is cut on a line with the diameter of that groove, because, being yielding, the cork will suffer itself to be indented by the edge of the disc rather than force that disc outward into its groove. It is apparent to me that Young never made a stopper on that plan, or he would have discovered that it was necessary to not only give the shoulder under the cork a diameter smaller than that of the unexpanded disc, but also to give the shoulder immediately under the disc groove a diameter less than the unexpanded disc."

And, after giving further details, he adds:

"For these reasons I am convinced that we must give up all hope of making a successful defense on Young, and it is never wise to make any invalid defense in a patent case, because such a defense reflects injuriously upon whatever valid defenses may be introduced in the same case."

The conclusions reached, with manifest reluctance, after careful experiments and thorough analysis by experienced counsel, vitally interested and evidently anxious to discover in Young's patent an anticipation of the Painter patent, and which, if found, would have been a successful defense against it, and the conviction that there was no merit in such defense, and the entire abandonment of the same after it had been set up in the answer, seems to us to be entitled to great weight as the opinions of experts against their interest. Opinions of experts generally, though given under oath, are but arguments in behalf of the side calling them. They are paid for generally as counsel is paid. These considerations cannot affect the weight of the opinions of Mr. Lorenz and Mr. Walker, given in circumstances which furnished every possible motive for reaching conclusions the converse of those actually reached, and their weight depends solely upon our estimate of their ability and skill. In somewhat of the same atmosphere must be weighed the opinion of the learned and conscientious judge below. His judgment in the former case had been adverse to the complainants, not, it is true, upon the precise point now at issue, but his opinion evidently was that the Painter patent was not entitled to the broad construction claimed for it. So when this case came before him, in so far as bias may be predicated

Digitized by Google

of a mind so singularly open and just, it might be thought that his inclination would be rather to limit than to expand the claims of Painter's patent, and his conclusion that Young's patent is not an anticipation of the invention of the patent in suit states tersely the point and essence of this controversy:

"But Young's is, after all, a different kind of stopper. His is a cork or plug, which is the stopper, and which is kept from coming out by a metal disc or cup. The complainants' is a metal disc, which is the stopper, made tight by its contact with the bottle by an elastic packing of cork or other material."

On the side of the complainants, then, we have Young's statement of invention and the drawing illustrating it, which is fundamentally different from Painter's, in that it is a cork retainer, and not a new device for stoppering bottles, as Painter's is. We have the proceedings of the Patent Office, with its repeated adjudications, after discussion and consideration of substantially the same argument as now presented, adverse to the contentions now urged, and where the claims of the Painter patent were framed and approved as adequately expressing the distinction between Painter's invention and Young's and all prior inventions. We have the opinion and judgment of an uncommonly able and experienced lawyer, founded upon experiments of his expert and his own analysis, in circumstances tending to give it the highest value, that there was no merit in Young's patent as a defense against Painter. We have the judgment of the court below to the same effect, and we have the undisputed fact that, although Young's patent was before the world for half a century, it had no effect upon the bottle-stopping industry. There is no evidence that it was ever used for any practical purpose, or that any inventor or manufacturer ever found in it suggestion of or inspiration for any new form of bottle stoppers; and we have the judgment of this court, the correctness of which is not questioned or impeached, that:

"Prior to the inventions hereinafter to be described, which are the subject-matter of this controversy, the common method of stopping bottles was with cork, wood, rubber, or some other resilient material, inserted longitudinally into the neck of the bottle, and held there by its elastic, lateral pressure in frictional contact with the circumference, supplemented, in cases where gaseous liquids cause internal pressure, by wire or twine on the outside of the bottle head." 108 Fed. 847, 48 C. C. A. 72.

Such was our judgment as to the state of the art prior to Painter's invention, the testimony showing abundantly and conclusively that there was no practical method of sealing bottles which dispensed with the costly and inconvenient plug or cork; and there is nothing in the testimony in this case, or in the argument, which attempts to modify the correctness of that conclusion. There have been great improvements in the art since Painter first received his patent, such as Hall's, who was a sort of pupil of Painter, and whose patent was held to be infringement, and the patents now in controversy, admitted to be infringements, if Painter's patent is construed as we have heretofore construed it. The fact that from the time of Young, in 1848, up to the time of Painter, there were no improvements in the art, and that since Painter's invention there have been many improvements, creates a strong presumption that Young's inventive idea was a barren one, and that

Digitized by Google

Painter's inventive idea was a different and a fruitful one, and the converse of a suggestion of identity of ideas, upon which the defense rests.

Before considering further this defense it is well to state precisely what Painter's invention was. The pertinent claims are as follows:

"(1) The combination of a receptacle having a groove in the side of its mouth and a shoulder projecting inward beyond the wall of the mouth above the groove, and a cup-shaped disc or plate of material having permanent flexion, all operating as set forth."

"(4) The combination of a receptacle having a groove in the inside of its mouth and a shoulder projecting inward beyond the wall of the mouth of the groove, a cup-shaped disc or plate of material having permanent flexion, and a packing or stopper beneath and retained by the disc or plate, all operating as set forth.

"(5) A combination, substantially as hereinbefore described, of a bottle having an interior groove in its mouth, a packing or gasket in said groove, and a disc or plate of material having permanent flexion, which confines the packing in said groove, and maintains it in tight contact with the adjacent surface of the groove."

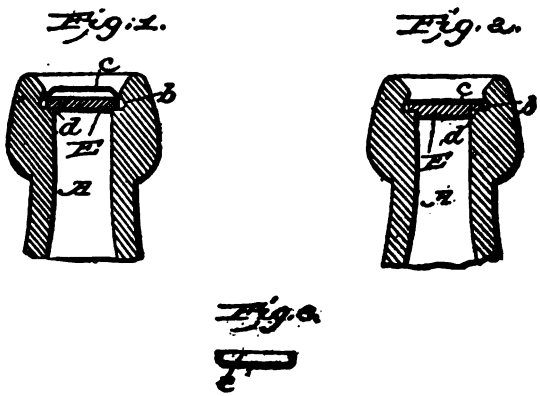

Figure 1 is a central section of the bottle neck, having a groove and a packing in such groove, and showing stopper in position to be expanded. Figure 2 is a similar section, showing the same expanded, and with the packing in the groove compressed and clamped against the adjacent surface of the groove. Figure 6 shows a cup-shaped disc. Reading his statement of invention and the figures illustrating it, what would the ordinary mind conceive to be the inventive idea of Painter? Clearly, his idea is to dispense with the old-fashioned method of stopping bottles with cork, and to produce by machinery a substitute for it. It is not intended to be an improvement on the old system, but a radical departure from it. Starting out with the knowledge that cork, being a natural product, was liable to great departures from uniformity in size and quality, relatively expensive in first cost, and requiring treatment to bring it to a satisfactory degree of elasticity, with certain disadvantages of a hygienic nature, by reason of its porous quality, which causes it to absorb deleterious substances, which might be injurious to the contents of the bottle, and which would also be injuriously affected by defective corks, requiring labor to put them in and additional labor to pull them out, he conceived a broadly novel system for stopper-

Digitized by Google

ing bottles, by dispensing with cork or reducing its use to a minimum, which would be free from the erratic effects of the natural material, inexpensive to produce, facile to operate, and efficient in results. Young's whole conception being that a cork is necessary, there is no suggestion of a substitute for it. The inventive idea involved in his disc of metal is to provide a substitute for the wire caging to hold the cork in its place. It proceeds upon the theory that a cork is necessary, and therein lies the fundamental difference in the underlying principle between Young and Painter. The elements employed, in their relation to each other, in their methods of operating, and in results obtained, are essentially dissimilar; the difference being a difference in the plan, not merely a difference of proportion and degree in carrying out the same plan. Painter's plan involves an interior annular groove in the bottle neck, which forms the chamber for the stopper, with the shoulder which forms the floor, another shoulder which forms the roof, and a peripheral wall. The stopper is a cup-shaped disc, formed of material having permanent flexion, small enough to enter the mouth of the bottle into the zone of the groove. When it so enters, being composed of material which retains its form when flattened, it is expanded by molecular deformation of the cup, whose periphery is pressed into hard and tight contact with the peripheral wall of the groove. If this wall was absolutely accurate in form, nothing more would be needed; but, as such refined nicety is expensive and difficult of attainment in ordinary bottles, Painter's scheme provides for supplementing the deflected cup with a packing of rubber, cork, or other suitable material, in the form of a gasket around the edges, and by the radial compression of this packing between the periphery of the cup and the peripheral wall of the groove; the disc serving not only its own office as a stopper, but also maintaining the packing in the groove in close contact with the adjacent surface of the bottle neck, thus making a stopper sufficiently tight to retain gaseous liquids. There is an inwardly projecting annular shoulder in the bottle neck, which prevents the cup slipping down too low in the neck of the bottle. A like shoulder above prevents it being pressed upwards by the expansion of the gaseous elements, and the cup thus easily positioned in the zone of the groove, when the deflecting agent is brought to bear on it, its periphery is expanded exactly where it is wanted. In such position it would be difficult to get it wrong. The packing required to make a tight joint need be very thin. If of cork, its bulk is trifling as compared with the amount of cork needed for an ordinary stopper; thus conserving economy and avoiding the other objections which experience has pointed out in the use of cork for stoppers.

Claim 1 of Painter's patent does not refer to packing. Claim 4 recites the packing, and claim 5 recites a bottle having an interior groove in its mouth, with a packing or gasket and a disc or plate having permanent flexion. The battle raged for years in the Patent Office over these claims, and after thorough examination of all prior patents, including Young's, and exhaustive consideration of the whole subject, as shown by the record—some of Painter's claims being disallowed—the claims of the patent were framed and allowed by the board of appeals as adequately expressing such distinctions as that board finally determined would be effective for the purpose of securing the invention

Digitized by Google

which the patent was intended to protect. If that board believed, as is claimed by appellants, that there is "substantial identity of the idea of the Young patent with that of the Painter patent," how is it possible that, after an exhaustive examination and review of the Young and other alleged anticipations, it could find, as it did find, that "there is novelty, and clear patentable novelty, in the combination which includes the vessel with its groove and shoulder and the raised expansible disc or plate?"

Having thus considered what we think are the essential features of Painter's patent, we will now, at the risk of some repetition, consider the essential features of Young's patent. Primarily, it suggests no substitute for the ordinary cork stopper. It proceeds on the theory that such a stopper is necessary, and provides nothing to take its place. There is no flanged or cup-shaped disc, or anything working on that principle as a substitute for the cork. All that it claims is "a disc of sheet metal raised into a conical form," which by pressure assumes a flat form, which "will retain the cork or other elastic stoppers securely in the necks or mouths of such vessel." The figures illustrating his conception show a round flat piece of metal, with a hole in the center and a line cut through to the circumference, which permits it to be coiled like a ribbon in the shape of a cornucopia. There is no inward projecting shoulder to the groove to arrest the coil of metal in the plane of the groove, for it is intended to rest on the cork. The law of its structure requires a pressure against the small end of the coil, which will cause it to unwind and thus slide flatwise into the groove. The principle on which it operates involves a radial division from center to circumference. It does not form and cannot form a continuous peripheral engagement with the wall of the groove as, either by itself or supplemented by a peripheral packing or gasket, will constitute a stopper, for it is not intended for any such purpose; its only purpose being to bar the escape of the stopper.

There is a great deal of testimony tending to show that it is not effective for that purpose; that, if operated under commercial conditions, it is not available for any practical purpose; and the record shows that experiments conducted in the former case for the purpose of preparing a defense satisfied the parties interested that it was inoperative and worthless. The experts, on the one hand, have pointed out the difficulties which in their opinion constitute a fatal disability inherent in the plan. On the other hand, experts have testified to their successful experiments. No bottlers engaged in the business and having practical experience in the art have shown that bottles can be stopped by this method with that uniformity, facility, and economy which gives it superiority over the old method of retaining corks by wire. All that these experiments prove is that by careful manipulation the disc can be inserted. There is no testimony whatever that the device has gone into practical use, and, as everybody has been free to use it for many years, this fact creates the strongest presumption of its inutility. Commercial success is not an infallible standard by which to test the merit of an invention. Such success is often due to mere business ability in manufacturing, exploiting, and advertising; but, given a large demand for a particular thing, a market already created, and an invention which it is free to use, the fact that it is not used strongly demonstrates

Digitized by Google

its inadequacy. The public, crying for bread, is not satisfied with a stone. It needed a new stopper, cheap in production, facile in operation, efficient in results. Young gave it only its old stopper with a new device for holding it in place, so difficult in operation as not to exclude the older method, which accomplished a like purpose, and the result was that nobody wanted it; and, so far as the testimony shows, nobody has ever used it, except the experts employed and paid to do so. From the time of Noah all mankind, including Young, stopped his bottles with cork or some other resilient material, until Painter's patents taught him something better and cheaper, so much better and so much cheaper that 60,000,000 of his stoppers were taken last year; and yet the learned counsel for the appellants, admitting in the court below, and not denying here, that he is operating under patents that are infringements, if Painter's is valid, asks with apparent earnestness, and with iteration, wherein consists Painter's inventive idea? If the records of the Patent Office, wherein it is set forth in detail, and where, after sharp contests and exhaustive examination, the claims were allowed and framed; if the instant public recognition in the large demand for the article produced—is not proof that he has invented something new and useful, it would be difficult, perhaps, to give an answer that would satisfy.

This is not one of those great inventions that awaken admiration for the genius of the inventor and stir the heart like a trumpet. It is nothing but a bit of metal and a bit of cork, so co-operating that the result is something very simple, very cheap, very efficient, and so very much needed that the wonder is that nobody did it before, but nobody did. It is not surprising that Young did not, for he was not working towards this result. He only sought to devise a new method of holding down the stopper, not to produce a new stopper. He had a different conception, worked on a different plan, and produced a different effect. He, too, it is true, used a bit of metal so coiled as to enter the mouth of the bottle, which in its devolution might be flattened out. There is no shoulder under the disc groove, with diameter less than the unexpanded disc, which would prevent its slipping into the bottle; for this shoulder, according to Young's conception, was not necessary, as the disc was not designed to enter until the cork was in, and was to rest on that. His coil might, by unwinding, serve the purpose of holding the cork in its place; but it could not possibly, by the very law of its construction, maintain that close circumferential contact with the wall of the bottle neck essential to make an effective stopper, either with or without the packing or gasket. It has not and cannot have the permanent flexion which Painter's disc has. It is a cone of thin metal, something like a metal ribbon, which is designed to perform its function by unwinding, liable to overlap, and entirely incapable of forcible expansion against the wall of the bottle like a continuous flange. The primary idea that an efficient seal could be effected by it alone, or by the lateral pressure of its edges against a packing of elastic material, which would thus insure the filling of any irregularities between the metal and the adjacent wall, is entirely lacking in Young's invention. Nobody has suggested, and nobody would pretend, that Young's disc alone could be used for sealing a bottle, while Painter's alone would seal the bottle, provided the bottle neck was perfectly round and regular; the gasket or packing being made necessary only by reason of the ir-

Digitized by Google

regularities and imperfections incident to cheap bottles. It does not follow that the inventive idea is the same because each employed a metallic element and an elastic element to accomplish the same purpose; for, if terms are employed which avoid defining the distinctive character of the device or imperfectly describe it, few patents would escape anticipation, for nearly all employ the same elements. The imagination may find in Young's "disc of sheet metal" the cup-shaped disc of Painter; for men are prone to see what they want to see. Polonius saw in the cloud first a camel, then a weasel, and then something "very like a whale," as Hamlet bade him. Taught by Painter, we can see that a "disc of sheet metal" may be converted to a purpose altogether different to that which Young conceived, not by a mere mechanical change, but by a functional change, due to a conception of a different plan. Young, it is true, does not in his statement of invention require that his disc of sheet metal should be slit; but his drawing shows it, and it cannot operate on his plan unless it is slit radially to form the coil or cone to enter the bottle neck, so as to unfold. So, with the cork. It is not a mere matter of dimensions, for that is simply a question of proportion, merely one of mechanical judgment; but the difference between the cork as used by Young and the thin layer or packing used by Painter is a difference of function. With Young the cork is the stopper; with Painter the packing is merely ancillary to the stopper. The difference in the interior groove and shoulders in the bottle neck is also one of function. This has already been pointed out, but a mere inspection of the drawings shows it more plainly than any words of description.

That there is a superficial resemblance between the two patents must be conceded, in that both use a combination of metal and elastic material; but it does not follow that there is an identity in the inventive idea, for, as we have endeavored to point out, each was guided and informed by a different purpose. The elements are combined upon a fundamentally different plan, and one cannot be merged into the other by mere changes in proportion or degree or by the substitution of equivalents. The mechanical skill which may be invoked to exclude the idea of invention must be mechanical skill applied in accordance with the direction of the alleged anticipating patent; not the skill which, taught by the invention in suit, seeks to reform and reorganize the former patent, so disguising it under a cloud of subtlety of argument and suggestion as to transform it.

The judgment of the court below is affirmed.

(131 Fed. 255.)

BRUNSWICK-BALKE-COLLENDER CO. v. KLUMPP et al.

(Circuit Court of Appeals, Second Circuit. May 17, 1904.)

No. 184.

1. PATENTS—INVENTION—BOWLING APPARATUS.

The Reisky patent, No. 599,447, claim 1, for an improvement in bowling apparatus, which consists of a specially constructed runway for the return of the balls, since the filing of a disclaimer of the feature of using a double incline, is void on its face, for lack of patentable invention.

Digitized by Google

Appeal from the Circuit Court of the United States for the Southern District of New York.

For opinion below, see 126 Fed. 765.

This cause comes here upon appeal from a decree of the Circuit Court, Southern District of New York, sustaining a demurrer to the complainant's amended bill, and dismissing the same. The decision below is reported in 126 Fed. 765.

J. C. Clayton, for appellants.

Harold Binney and S. L. Moody, for appellee.

Before LACOMBE, TOWNSEND, and COXE, Circuit Judges.

LACOMBE, Circuit Judge. The suit was brought upon letters patent No. 599,447, granted February 22, 1898, to complainant, as assignee of Emil Reisky, for "improvement in bowling apparatus." It was heard upon pleadings and proofs, and the bill dismissed for lack of patentable invention. Appeal was taken to this court, and decree was reversed. Our opinion is reported in 111 Fed. 904, 50 C. C. A. 61. It sufficiently sets forth the specifications and the claim in controversy. We concurred with the judge who heard the cause in the conclusion that the "improvement" was one which should have been obvious to an ordinary skilled mechanic, but were constrained by the testimony to hold that there was patentable invention. That testimony is set forth in the opinion. It showed that the desirability of retarding the ball as it neared the home terminal of the returnway had been appreciated for many years; that many different devices to secure that result had been suggested, but that apparently no one of those who sought to secure the result had adopted the seemingly obvious one of making the ball reach the home terminal on an up grade. Had any such method been disclosed in the earlier art, the original decision would have been affirmed. It now appears that, apprehending proof of such a structure antedating the patent, the patentee has filed a disclaimer which recites that in the prior art there were ball returnways with "an upgrade near the player's end, merging into the terminal," and disclaims such part of the claim "as would include a returnway by which the homing of the ball was not accelerated." The bill presents the disclaimer as well as the patent, and, with the concession that in the prior art the returning ball had been retarded by an up grade, the case may properly be disposed of on demurrer; and, for the reasons set forth in our former opinion, we have reached the conclusion that the patent discloses no patentable invention, except possibly as to minor details of construction, which are subject of other claims, not here in controversy.

The decree is affirmed, with costs.

Digitized by Google

(132 Fed. 901.)

MAYOR, ETC., OF CITY OF SAVANNAH et al. v. HOLST et al.

(Circuit Court of Appeals, Fifth Circuit. October 10, 1904.)

No. 1,394.

1. JURISDICTION OF FEDERAL COURTS—FEDERAL QUESTION—ENJOINING ENFORCEMENT OF INVALID ORDINANCE.

A municipal ordinance not passed in accordance with legislative authority is not a law of the state within the meaning of the prohibitions of the Constitution of the United States, and a suit to enjoin the enforcement of an ordinance alleged to have been passed in violation of the requirements of the state law presents no question arising under the Constitution, which confers jurisdiction on a federal court, on the ground that the enforcement of the ordinance will deprive complainants of property without due process of law.

Appeal from the Circuit Court of the United States for the Southern District of Georgia.

For opinion below, see 131 Fed. 931.

William Garrard and Alexander A. Lawrence (Wm. W. Osborne, on the brief), for appellants.

Walter G. Charlton and J. Ferris Cann, for appellees.

Before PARDEE and SHELBY, Circuit Judges, and TOULMIN, District Judge.

SHELBY, Circuit Judge. The original bill in this case was filed by J. B. Holst and seven others, all citizens of Georgia, against the city of Savannah, a municipal corporation chartered under the laws of Georgia, and the Savannah Electric Company, a corporation organized and chartered under the laws of Georgia. Relief was prayed for by injunction. The Circuit Court granted a temporary injunction, and the decree taking jurisdiction of the case and granting the injunction is assigned as error.

The complainants being citizens of Georgia, and the defendant corporations, for purposes of jurisdiction, being considered citizens of that state also, the court below had no jurisdiction of the case by reason of the diverse citizenship of the parties. After a restraining order had been granted pursuant to the prayer of the bill, and after the defendants had answered, denying the jurisdiction of the Circuit Court, Emma L. Carrington was, on her petition asserting her interest in the suit and alleging that she was a citizen of New York, made a party complainant to the bill. The bill then presented a case in which eight citizens of Georgia and one citizen of New York, as co-complainants, were suing two Georgia corporations. The bill, as amended, was still amenable to the objection of want of jurisdiction so far as the same is based on citizenship, for the Circuit Court has not jurisdiction of a suit in which one of the plaintiffs and the defendants are citizens of the same state. Blake v. McKim, 103 U. S. 336, 26 L. Ed. 563. The claim on the part of the complainants that the Circuit Court had jurisdiction of the

¶ 1. Jurisdiction of cases involving federal question, see notes to Bailey v. Mosher, 11 C. C. A. 308; Montana Ore-Purchasing Co. v. Boston & M. Consol. Copper & Silver Min. Co., 35 C. C. A. 7.

Digitized by Google

case was clearly based on the assumption that the suit was one arising under the Constitution or laws of the United States. The jurisdiction cannot be maintained on this ground unless the suit involves a controversy as to the effect or construction of the Constitution or laws of the United States, upon the determination of which the result depends. "And it must appear on the record," said the court in Western Union Telegraph Company v. Ann Arbor Railroad Company, 178 U. S. 239, 20 Sup. Ct. 867, 44 L. Ed. 1052, "by a statement in legal and logical form, such as is required in good pleading, that the suit is one which does really and substantially involve a dispute or controversy as to a right which depends on the construction of the Constitution or some law or treaty of the United States before jurisdiction can be maintained on this ground." We are of the opinion that the record before us does not meet the requirements of this rule. It is true that the bill contains the general averment, found in many records where the jurisdiction has been denied, that the acts of the defendants sought to be enjoined "would deprive plaintiffs of their property rights without due process of law, and in contravention of the Constitution of the United States." This conclusion of the pleader is not controlling. We must look to the case made by the bill. The bill shows that the plaintiffs own lots fronting on Gwinnett street, in Savannah, and "have certain property rights" in Gwinnett street, "of which they have been in daily use"; that the electric company, one of the defendants, is proceeding to erect poles and string wires and lay tracks for the operation of its cars upon that street under the "pretended authority of a resolution passed by the mayor and aldermen of the city of Savannah." It is alleged that this resolution was passed at midnight, without giving the notice required by law, and that it was read but once, when the law required it to be read twice. It is then averred that the resolution is "illegal and void," and that it conferred no rights on the Savannah Electric Company. This laying of the tracks, etc., it is alleged, will damage each of the complainants $2,000, in this: that each will "practically be prevented from using the street in front of his property and his property rights therein will be destroyed and taken away." It is also alleged that the mayor and aldermen, in passing the resolution, acted under "assumed authority" from the state of Georgia, and as an agency of the state for governmental purposes.

It will be observed that the complainants elaborately show that the resolution was passed without notice, and without complying with the law—clearly referring to the state law—and that, therefore, the resolution is void, and that it conferred no authority on the electric company to lay its tracks on Gwinnett street. It is not alleged, or even asserted, in argument, that the Legislature of Georgia has passed any statute which conflicts with the Constitution or laws of the United States; nor is it alleged that it has conferred, or attempted to confer, on the mayor and aldermen of the city of Savannah the authority to enact such ordinances. The gravamen of the bill is that the city has passed a resolution void under the state law, and that the electric company is acting unlawfully under a claim of authority conferred by the resolution. The only reasonable construction that can be placed on the bill is that it asserts that the action of the municipal corporation is illegal and void

Digitized by Google

because it is contrary to the laws of the state of Georgia. That contention raises questions depending for their solution on the laws of Georgia. There is no construction of the federal Constitution involved in the inquiry as to whether the resolution in question is valid or void under the Georgia laws. The bill therefore presents no dispute about the construction of the Constitution or laws of the United States in any way. The question presented is as to the validity of the city's resolution, which is a matter of state law. McCain v. Des Moines, 174 U. S. 168, 19 Sup. Ct. 644, 43 L. Ed. 936. A municipal ordinance not passed under legislative authority is not a law of the state within the meaning of the prohibitions of the Constitution. Hamilton Gas Light Co. v. Hamilton City, 146 U. S. 258, 13 Sup. Ct. 90, 36 L. Ed. 963. The jurisdiction of the Circuit Court can be sustained, if at all, only on the ground that the construction and operation of the railway enjoined deprived the complainants of their property without due process of law, in violation of the fourteenth amendment. That amendment operates against deprivation by a state, and the bill here shows that what is done is without authority, and is illegal and void. It does not appear that the municipal corporation has acted under the authority of a Georgia law alleged to be violative of the Constitution. The case comes clearly, we think, within the principle stated in Barney v. The City of New York, 193 U. S. 430, 24 Sup. Ct. 502, 48 L. Ed. 737, where the Supreme Court held that the Circuit Court was without jurisdiction. If it be true, as alleged in the bill, that the mayor and aldermen have passed an ordinance which, under the laws of Georgia, they had no right to pass, and that the ordinance is void, and that the electric company is trespassing on the property of the complainants or interfering with their property rights under the authority seemingly conferred by the void ordinance, these wrongs undoubtedly confer a right of action on the plaintiffs. But unless it appears from the averment of facts in the bill in such form as is required by good pleading that the suit is one which involves a controversy as to a right which depends on the construction of the Constitution or some law of the United States, the jurisdiction cannot be maintained on that ground.

The temporary injunction is dissolved, the decree of the Circuit Court reversed, and the cause remanded.

Digitized by Google

(132 Fed. 228.)

BETTS v. UNITED STATES.

(Circuit Court of Appeals, First Circuit. August 25, 1904.)

No. 512.

1. CRIMINAL LAW—APPEAL—ASSIGNMENTS OF ERROR.

Assignments of error, stated in general terms, and which are discussed in the brief of plaintiff in error in such general language as to cast upon the court the burden of searching the record to ascertain the precise propositions of law relied on and the facts which render them applicable, will, ordinarily, not be considered.

2. SAME—REQUESTS TO CHARGE.

Peremptory requests to charge, based upon a partial statement of the facts, or which are not properly qualified to render them applicable to the facts shown in evidence, are ineffectual to sustain assignments of error based on their refusal, and will not be considered by the appellate court unless in exceptional cases.

3. POST OFFICE—USE OF MAILS TO DEFRAUD.

Issues, evidence, and instructions considered in a prosecution based on Rev. St. § 5480, as amended by Act March 2, 1889, c. 393, § 1, 25 Stat. 873 [U. S. Comp. St. 1901, p. 3696], for fraudulent use of the mails.

4. SAME—PROSECUTION—EFFECT OF ORDER FOR TRIAL OF INDICTMENTS TOGETHER.

Rev. St. § 5480, as amended in Act March 2, 1889, c. 393, § 1, 25 Stat. 873 [U. S. Comp St. 1901, p. 3696], making the use of the mails to defraud a criminal offense, provides that an indictment thereunder may charge offenses to the number of three when committed within the same six calendar months, but the court thereupon shall give a single sentence. Rev. St. § 921, [U. S. Comp. St. 1901, p. 686], provides that a court of the United States, when causes of a like nature or relative to the same question are pending before it, may "make such orders or rules concerning the proceedings therein as may be conformable to the usages of courts for avoiding unnecessary costs or delay, * * * and may consolidate such causes when it appears reasonable to do so." Nine indictments were returned against defendant under said section 5480 [U. S. Comp. St. 1901, p. 3696], each containing three counts, all relating to the same alleged scheme to defraud, but charging different mailings, all within the same six calendar months. The record showed that "by order of the court the said nine indictments were tried together and at the same time, and upon each of the said nine indictments separate verdicts were rendered," and separate sentences were imposed under the several indictments. *Held*, that the indictments were not consolidated, which would, in effect, defeat the implied prohibition against joining more than three offenses in the same indictment, and that the only effect of the order was that all the indictments should be tried together to the same jury, leaving each party with the same material rights as though tried separately.

5. JURY—PEREMPTORY CHALLENGES—EFFECT OF TRIAL OF INDICTMENTS TOGETHER.

That a number of indictments against the same defendant under Rev. St. § 5480 [U. S. Comp. St. 1901, p. 3696], for using the mails to defraud, are by order of the court tried together to the same jury, does not affect the right under Rev. St. § 819 [U. S. Comp. St. 1901, p. 629], to three peremptory challenges for each indictment.

Aldrich, District Judge, dissenting.

In Error to the District Court of the United States for the District of Massachusetts.

¶ 1. See Criminal Law, vol. 15, Cent. Dig. § 2957.

Digitized by Google

Charles W. Bartlett and Harvey H. Pratt, for plaintiff in error.

Henry P. Moulton, U. S. Atty., and William H. Lewis, Asst. U. S. Atty.

Before HOLMES, Circuit Justice, PUTNAM, Circuit Judge, and ALDRICH, District Judge.

PUTNAM, Circuit Judge. Nine indictments were returned in the Circuit Court for the District of Massachusetts at the September term, 1901, against the plaintiff in error and one Fisher, under section 5480 of the Revised Statutes, as amended by Act March 2, 1889, c. 393, § 1, 25 Stat. 873 [U. S. Comp. St. 1901, p. 3696], which indictments were remitted to the District Court for the same district, and proceeded on to judgment. One indictment appears at large in the record before us. It contains three counts. We also understand that each of the other indictments contains three counts, and that all the offenses charged in all were within the same six calendar months. The indictments and all the counts relate to the same "scheme and artifice to defraud," and the only difference between the several counts in the several indictments is that each shows a separate mailing. The statute provides that on conviction, punishment shall be imposed "by a fine of not more than five hundred dollars and by imprisonment for not more than eighteen months, or by both such punishments, at the discretion of the court." It also provides as follows:

"The indictment, information, or complaint, may severally charge offences to the number of three when committed within the same six calendar months; but the court thereupon shall give a single sentence, and shall proportion the punishment especially to the degree in which the abuse of the post-office establishment enters as an instrument into such fraudulent scheme and device."

Section 921 of the Revised Statutes [U. S. Comp. St. 1901, p. 686], provides:

"When causes of a like nature or relative to the same question are pending before a court of the United States, or of any territory, the court may make such orders and rules concerning the proceedings therein as may be conformable to the usages of courts for avoiding unnecessary costs or delay in the administration of justice, and may consolidate said causes when it appears reasonable to do so."

Section 819 of the Revised Statutes [U. S. Comp. St. 1901, p. 629], after providing for challenges in cases of treason, other capital offenses, and other felonies, proceeds:

"And in all other cases, civil and criminal, each party shall be entitled to three peremptory challenges; and in all cases where there are several defendants or several plaintiffs, the parties on each side shall be deemed a single party for the purposes of all challenges under this section."

The record discloses the following:

"The defendants were severally ordered to proceed to, and were placed upon, trial on said nine indictments, and subsequently separate verdicts of guilty on each indictment were rendered against the defendant Betts."

And again:

"By order of the court, the said nine indictments were tried together and at the same time, and upon each of said nine indictments separate verdicts were rendered."

Digitized by Google

No objection was made to these orders. They are assumed to have been entered pursuant to that portion of section 921 of the Revised Statutes which authorizes orders for avoiding unnecessary costs or delay. Plainly, the indictments were not consolidated, because the record shows that there were separate verdicts and cumulative sentences, so that each proceeding retained its identity. The entire effect of the order was only that the various indictments were tried together by the same jury.

During the progress of the trial Fisher pleaded guilty. The record also contains the following:

"In the impaneling of the jury the defendant Betts challenged Jurymen Goodnough, Hall, and Sears. Before Juryman Tobey was sworn, he challenged him, claiming that he had a right to twenty-seven arbitrary challenges. The government objected. The challenge was disallowed, and the defendant Betts duly excepted."

The nature of the fraudulent scheme alleged against Betts and Fisher, and the substance of the case in reference thereto, are shown sufficiently by the following extract from indictment 1:

"The jurors for the United States of America, within and for the district of Massachusetts, upon their oath, present that before and at the time of the commission of the offence hereinafter charged, John M. Fisher and Frederick E. Betts did intend to devise and did devise a scheme and artifice to defraud, which scheme and artifice to defraud was as follows, that is to say, that they should falsely pretend and represent to divers persons with whom they should communicate that they, said Fisher and Betts, were engaged in carrying on a regular banking and brokerage business at Boston in the District of Massachusetts, and that they should by published advertisements and by communications through the United States mails falsely pretend and represent to the public and to persons to whom they should send circulars and letters that they, said Fisher and Betts, were engaged with a large New York firm in the business of manipulating stocks, that is to say, in the business of buying stocks and using means to enhance the prices and market value of stocks so bought, and when said stocks should have reached a higher price so that a profit over the purchase price could be had, selling said stocks for the benefit of persons who should entrust them, said Fisher and Betts, with money to pay a part or the whole of the purchase price thereof; that for the purpose of buying and selling stocks and manipulating them as aforesaid, a pool or special deal would be formed to buy and sell a certain stock listed on the New York Exchange to the purchase of which said listed stock by means of said pool or special deal the persons to whom the circulars and letters aforesaid should be sent would be asked and urged by them, said Fisher and Betts, to contribute money, and for the purpose of effecting the purchase of said listed stock, to pay over money to them, the said Fisher and Betts; whereas in truth and in fact they, said Fisher and Betts, were not engaged in carrying on a regular banking and brokerage business at said Boston or elsewhere; and whereas in truth and in fact they, said Fisher and Betts, were not engaged with any New York firm in the business of manipulating stocks, and that they, the said Fisher and Betts, did not intend to be in any way connected with any pool or special deal to be formed to buy and sell any stock listed on the New York Exchange, and no such pool or special deal had been formed or would be formed; all of which they, the said Fisher and Betts, at all the times aforesaid well knew; with the view and intent of them, said Fisher and Betts, to obtain and get into their hands and possession money and property of such persons as might entrust money and property to them for the purchase of stocks by means of a pool or special deal as aforesaid, and to convert the same to their, said Fisher and Betts', own use and benefit, without purchasing any stocks whatever and to cheat and defraud such persons as might entrust money and property to them, said Fisher and Betts, for the purchase of stocks out of the money so entrusted."

Digitized by Google

Although there were nine indictments and nine judgments, we have here only one writ of error. No question has been made on that score, and we refer to it only in order that we may not be assumed to acquiesce in this method of procedure. Betts filed a motion to quash, containing a large number of specifications, which was overruled, and on which overruling a bill of exceptions was allowed. The law is settled that, with exceptional cases, where the federal courts have conformed themselves to the ancient local practice, error does not lie to the overruling of such a motion. United States v. Gooding, 12 Wheat. 460, 478, 6 L. Ed. 693, and many subsequent decisions of the Supreme Court. We, however, pass that by, because the objections made to the indictments on the motion to quash are mainly of that class which, if valid, would not be cured by verdict, and therefore may be assigned for error independently of any demurrer or motion in arrest of judgment.

The number of errors formally assigned in this record is 37, but, in view of the fact that some of the errors thus assigned cover numerous distinct propositions, a proper enumeration would be 58. Following these through into the brief for the plaintiff in error, we find a number discussed in the following manner:

"The court should have given apt instructions concerning the requests stated in the twenty-first, twenty-second, twenty-third, and twenty-fourth assignments of error. It appeared in evidence (record, page 16) that some of the witnesses called by the government knew that they were speculating in the stock market. Other witnesses called by the defendant (record, pages 68 and 69) distinctly stated that they bought and sold stocks upon margin. There was such evidence in the case that the jury might well have found concerning some of the counts in the indictments that the defendant was not guilty, had the trial court given the substance of these requests."

This is all that is said about these four alleged errors. It is apparent that this throws upon the court the burden of searching out the law and the record, and of putting together the several portions of the latter for the purpose of sifting out the propositions on which the plaintiff in error relies, whatever they may be. This is a burden which the court will not assume. An example of another class which may also be passed by us is found in the thirty-first error assigned, as follows:

"That said District Court erred in not instructing the jury, as requested, that, if they were satisfied that the defendant Betts was in the business of receiving money and paying it out with interest, or receiving money and investing it in stock for his customers, he could not be convicted."

This is one of the class of peremptory requests of which others are found in the record, which are clearly ineffectual because unqualified. Why requests of this class are not to be considered, unless under exceptional circumstances of apparent and substantial injustice, is fully explained by us in McQueen v. Kondelin, 127 Fed. 76, 61 C. C. A. 650.

Several errors are assigned relating to the requested instructions to the jury based on the hypothesis that, in order to convict, the United States were required to prove that everything which the plaintiff in error was charged with having pretended was falsely pretended. That this is not the law with reference to indictments of this character is such a fundamental proposition that we need not notice such alleged errors. A considerable portion of the case is based on the claims that

Digitized by Google

the statute sounds in false pretenses as understood at common law, and that the indictments should disclose the name of some person intended to be deceived, and also on the further claim that the United States should prove that somebody was in fact defrauded. The entire line of authorities with reference to the statute in question is so at odds with those propositions that we easily lay them aside.

What we have said disposes of all the points made by the plaintiff in error, except some others so clearly insufficient that we do not deem it necessary to allude to them, and except those to which we will now call attention. It will be noticed that one of the allegations in the indictment is that the plaintiff in error and Fisher, who were partners under the style of J. M. Fisher & Co., falsely pretended that they were carrying on a regular banking and brokerage business. This, of course, raised an issue calling on Betts to meet the evidence offered by the United States in regard thereto by proper proofs that he and Fisher were in fact so engaged. Thereupon Betts offered to show by officers of banking institutions in Boston that within certain dates named sums aggregating a large amount of money were paid by J. M. Fisher & Co. out of their deposits to many customers, appearing by checks drawn by them, which customers he further proposed to show, in many instances, identified themselves to the banking institutions by producing statements of stock dealings and accounts received from J. M. Fisher & Co., accompanying the checks presented for payment. For the same purpose, in order to establish that a large number of customers had purchased and sold through them various stocks and commodities, he offered to prove by one in the employment of J. M. Fisher & Co. that the witness had drawn checks to these customers, and that the checks came back through the clearing house properly indorsed. The difficulty with this class of proof is that, of itself, in the absence of any expressed purpose to show the transactions out of which the checks arose by persons who knew about them of their proper knowledge, the evidence offered was entirely ineffectual. If Betts and Fisher were in fact engaged in a proper banking and brokerage business, there must have been persons in their employment who knew it. Therefore the court could justly conclude that the offer of such scraps of evidence as we have referred to could have had no purpose except to mislead and confuse, however valuable they might have been in fortifying a case resting in whole or in part on proper proofs of a direct and fundamental character. The court was not only justified in rejecting this evidence, but in the performance of its obligation to protect the case from confusion and from needlessly occupying its own time and the time of the jury it was in duty bound so to do.

An issue arose whether Betts and Fisher had caused to be purchased on the Consolidated Stock Exchange of New York certain securities, details of which need not be named. It became desirable on behalf of the United States to show that no bona fide transactions of that character had actually occurred. It appears that Betts had represented that such dealings had been made through a broker by the name of Gwynne. Thereupon one Courtney was called by the United States, who testified that he was a clearance clerk at that exchange. He produced statements of transactions cleared there on certain days in question, and tes-

Digitized by Google

tified that the clearance sheets showed no purchases by Gwynne of the character asserted. This, of course, was not the proper way of supporting this issue on the part of the United States. It was three or four generations away from proof by parties having personal knowledge. As a preliminary fact, to be connected with others, it might have been admissible; but, standing alone, it might have tended to seriously prejudice the plaintiff in error. Fisher, however, testified that he and Betts employed Gwynne at a stated sum of $30 a week to render them statements showing fictitious sales and purchases, presumably designed to be used by them in imposing on their customers. No attempt was made to contradict or discredit Fisher on this point. Therefore it may well be said that this issue was so clearly proved in behalf of the United States that the testimony of Courtney could not in any way have prejudiced the plaintiff in error.

Of like dangerous character was the evidence admitted against the objection of Betts from a witness by the name of Adams, to the effect that he had addressed a letter to R. G. Dun & Co., inquiring with reference to the standing of Betts and his partner, Fisher. This grew out of the fact that in one communication received by Adams there was this postscript:

"References as to our financial and moral standing may be had by getting a special report on us from R. G. Dun & Company, or writing to the Bankers and Manufacturers Mercantile Agency of New York and Boston, 50 State street, Boston."

Adams applied to the Bankers' & Manufacturers' Mercantile Agency, and received a favorable report; but, on the theory of the United States, this so-called agency was a mere stool pigeon of Betts and Fisher. Thereupon, against the objection of Betts, Adams was allowed to testify that he wrote R. G. Dun & Co., and received an answer from them, but no report. A representative of R. G. Dun & Co. was subsequently called by the United States, and testified that Betts and Fisher, as partners, were subscribers to the Dun Agency, but that the agency did not make reports except to its subscribers. Thereupon Betts made a request for an instruction that under the circumstances the fact that Betts and Fisher referred to the two agencies named could not be taken into consideration as a part of the scheme or artifice to defraud. This request was, of course, too broad, because it covered both agencies. The court, however, said to the jury that the facts as to R. G. Dun & Co. did not appear to have any particular relevancy one way or the other, but it concluded on this point as follows: "You may attach to it such weight as you think best." It may be that the proper instruction as to the matter of R. G. Dun & Co. would have been that it had no relevancy. In view, however, of the extreme improbability that the jury could have regarded the matter as at all material, of the unusual number of points made by Betts according to the errors assigned as we have stated, and of the omission in the requested instruction to distinguish between Dun & Co. and the other so-called agency, no exception on this account can be sustained.

Fisher testified that a few days prior to the arrest of himself and Betts they were in hiding. To overcome any inference of guilt to be drawn from this evidence, a witness called by Betts testified that he

Digitized by Google

was acting as Betts' attorney, and that whatever hiding there was was by his advice for a brief time while he was negotiating about bail. Betts claimed that this explanation robbed the hiding of any evil significance, and he asked for an instruction in reference to it as follows:

"If the jury shall find that the defendants, Betts and Fisher, concealed themselves between the 28th and 31st days of October, 1901, by advice of counsel, and for the purpose of enabling him to agree with the District Attorney upon the amount of bail, no inference can be drawn by the jury that such a concealment was flight or a confession of guilt."

Of course, this request was too positive, and the mere fact that it was not given would not afford a basis for an exception. The court, however, charged as follows:

"If a man runs away from an officer of justice, it may be taken into account against him as much or as little as the jury think, or ought fairly to think, it to be entitled to. The fact that he was seeking for bail during the time that he was away, and that he surrendered himself as soon as bail could be found for him, should be also taken into account in determining the motives of his absence and the weight which the mere fact of his absence has on the question of his guilt. These are questions for you to determine, gentlemen, as reasonable men, giving to them such weight as you think ought to be given to them."

The questionable portions of this instruction are covered by the words "as much or as little as the jury think," and "giving to them such weight as you think ought to be given to them." The effect of this repetition was to submit the entire topic to the jury without sufficient caution or explanation. The attorney's testimony was not questioned, and, while the requested instruction was too positive in form, yet his evidence left very little, if anything, of material consequence in the fact relied on by the United States, and the jury should have been cautioned accordingly. The Supreme Court has been very wary on this topic, although it never came before it in this form. Hickory v. United States, 160 U. S. 408, 16 Sup. Ct. 327, 40 L. Ed. 474; Alberty v. United States, 162 U. S. 499, 16 Sup. Ct. 864, 40 L. Ed. 1051; Starr v. United States, 164 U. S. 627, 17 Sup. Ct. 223, 41 L. Ed. 577. The rule in Allen v. United States, 164 U. S. 492, 498, 17 Sup. Ct. 154, 41 L. Ed. 528, is not applicable, because there was no attempted explanation as here.

The only other error assigned which requires consideration is with reference to the number of challenges to which Betts was entitled. It is first necessary to consider further the nature of the proceeding involved in the order of the court that the indictments should be "tried together and at the same time." We have said that under the circumstances this was not a consolidation in the proper sense of the word. The natural meaning and inherent force of the word "consolidation" are perfectly plain and irresistible, although it is known that in some of the authorities the word is used loosely. It has its place in proceedings in equity, or in admiralty, where several libels or petitions are, by authority of the court, combined into one, so that at the close only one decree is rendered. An example of this in admiralty is found in The North Star, 106 U. S. 17, 27, 1 Sup. Ct. 41, 27 L. Ed. 91, where unification by consolidation proper was clearly expressed. Beyond all question, no such consolidation could arise with reference to the present indictments, because otherwise the implied prohibition of the statute

Digitized by Google

on which they were based against combining in one indictment more than three offenses would be indirectly defeated. The result is that, as neither indictment lost its identity, the material rights of both parties as to each continued the same, unless so far as otherwise necessarily involved in the trial of all at the same time with the same jury, or unless so far as expressly provided by statute or necessarily implied from what the statute enacts. Accordingly, in Mutual Life Co. v. Hillmon, 145 U. S. 285, 293, 12 Sup. Ct. 909, 36 L. Ed. 706, in speaking of the statutes we are discussing, it naturally fell into the use of the following language: "No defendant could be deprived [meaning none could be deprived by an order for trying cases together], without its consent, of any right material to its defense, whether by way of challenge of jurors," etc. It is true that this broad language was not strictly essential to the case in which it was used, but the way in which the court fell into it illustrates strikingly that it is the natural construction to be given to the statutes in question. Therefore it rests on the United States to make it clear that this natural reading should not have full effect. With such reading the conclusion follows that, inasmuch as by the express language of section 819 of the Revised Statutes [U. S. Comp. St. 1901, p. 629] the plaintiff in error had a right to three peremptory challenges on each indictment if tried separately, this was a "right material" to his defense, not to be taken away merely because several indictments were submitted to the same jury at the same time. Not only is there no provision of the statute to the contrary, but there is nothing in the practical conditions of a joint trial which would justify the court in holding that the statute by implication necessarily deprived the plaintiff in error of the right claimed by him.

It is indisputable that the right to challenge peremptorily is a "right material" to the defense, as that expression is used in Mutual Life Company v. Hillmon. Indeed, it is among the most useful weapons of defense put in the hands of an accused person. It is the only method of cutting off underground, malevolent currents, visible at some times to no one except the accused and his counsel, and sometimes not even to both of them. Without its uncontrolled exercise, justice would be absolutely unobtainable in many cases. The greatest of all French novelists, writing with reference to some noblemen charged with violence towards a person who had acquired their confiscated estates at the period of the incipiency of the First Empire, pointed out the hopelessness of defense before a jury some of whom had purchased national lands, although no issue relating thereto was involved. In the present case the District Court, according to well-settled rules, was privileged to refer formally to its own records, and, for the purpose of advising ourselves with regard to the spirit of this statute, we can informally turn thereto. On doing so it might appear by proceedings in bankruptcy against Betts and Fisher that their dealings were very extensive, and, either through fraud or blundering on their part, very unfortunate. They dealt with a great many persons, ranging through many localities in the district of Massachusetts, and involving heavy losses. These facts illustrate the desirability of being able to purge the jury with reference to the numerous localities where this trial might stir up smouldering prejudices, thus emphasizing the necessity, under at least some

Digitized by Google

circumstances, of enlarging the number of challenges proportionately to the number of the different offenses alleged. Blackstone's Commentaries, vol. 4, 353, characterizes this privilege as involving "an arbitrary and capricious species of challenge"; and the learned author regards the law as protecting it not only for substantial reasons, but so that, in view of "sudden impressions and unaccountable prejudices," the prisoner may have assurance that the jurors stand unprejudiced, and that he may have a "good opinion" of them. However this may be, the purposes for which peremptory challenges are required are of such varied, unexpected, and sometimes unprecedented characters, that the inability to accomplish justice without them prohibits the courts from clipping the wings of the right to them beyond what the common law or the statute clearly requires.

Sometimes the best way to make certain of the falsity of a position is to sift the arguments proposed in its favor. The United States first urge the point of convenience. They say it was for the prisoner's convenience that the nine indictments should be tried together, and that the statute did not contemplate the impractical procedure which would enable him to challenge off at a single trial two juries and a half. The record does not show that Betts objected to the nine indictments being tried together. Perhaps he would have objected strenuously if he had understood that his right of peremptory challenge was thereby diminished. However, a question of convenience with reference to the construction of a statute is not to be determined by a single case. Mr. Justice Story, in United States v. Marchant, 12 Wheat. 480, 481, 6 L. Ed. 700 et seq., points out that when at the common law each person jointly indicted for a capital offense had a full right of challenging peremptorily, those accused sometimes found it convenient to be tried together and sometimes otherwise; and that the convenience involved in being tried together grew out of the multiplication of the number of challenges thus practically given. It is rarely either convenient or safe, or conducive to justice, for an accused person to be put on trial at the same time and before the same jury for a very large number of offenses, even of the same class. The point of convenience of the kind to which the United States thus refers bears as much against their contention as for it. It may be convenient for the United States, and undoubtedly assists in obtaining convictions, to put before a jury a mass of evidence bearing more or less pertinently on the whole group of alleged numerous offenses, which would not be admissible if only one were in issue; but experience has sometimes shown that the inconvenience to the accused coming therefrom rises to the danger point. Therefore, if this statute is to be construed according to the question of mere convenience, whose convenience are we to assume Congress intended to consult? It is true that, where a proposed construction would occasion great inconvenience, or produce an inequality or injustice, that construction is to be avoided if another and more reasonable interpretation is present in the statute. Knowlton v. Moore, 178 U. S. 41, 77, 20 Sup. Ct. 747, 44 L. Ed. 969; Bird v. United States, 187 U. S. 118, 124, 23 Sup. Ct. 42, 47 L. Ed. 100. The mere question between the right to challenge three jurors and the right to challenge two juries and a half, as put by the United States, is certainly not within

Digitized by Google

the meaning of the expression "great inconvenience." An inconvenience which controls the construction of a statute must be an inconvenience of such a kind as to force the court to find a reasonable interpretation in lieu of one which is unreasonable. Such an inconvenience as spoken of here is of such an inferior class that to attempt to determine whether Congress had it in mind is necessarily a matter of pure speculation.

Again, the United States declare impracticable a procedure which they say might give an accused person a right to challenge 150 jurors, and they urge anew that the statutes do not contemplate such an impracticable result. Even such a supposed extreme contingency involves nothing serious. If it did, it might well be maintained that, when Congress authorized several indictments to be tried together, it intended the right to challenge should be cut down as though there were but one; but, as no situation which can reasonably be anticipated approaches any condition of necessity, the theory of convenience or inconvenience pressed on us by the United States should properly be classed as one of those "too uncertain" things to justify resting thereon the judgment of a court in the interpretation of this statute. Bate Refrigerator Company v. Sulzberger, 157 U. S. 1, 37, 15 Sup. Ct. 508, 39 L. Ed. 601.

The next proposition of the United States on this score is that, inasmuch as on the trial of a single indictment the greater or smaller number of counts does not affect the right of challenge, the same reasoning applies to separate indictments when tried together. If in any case the United States see fit for reasons of their own to break up charges for numerous offenses into several indictments, instead of combining them into one, the person accused must, on the other hand, be protected in whatever advantages the law gives him by reason of such splitting up. This proposition of the United States is so plainly not a logical one that it clearly needs no further discussion.

The United States then cite several cases, of which one is Withers v. Commonwealth, 5 Serg. & R. 59. Although these decisions seem to go to the undisputed proposition that on a single indictment one set of challenges only is allowed, no matter how many counts it contains, Withers v. Commonwealth presses the law a little further, but not to any adjudicated proposition. Whatever the United States rely on therein is mere dictum. The United States then press the proposition that the intent of section 921 was to make one case of what formerly existed as several cases. This, we have shown, is clearly contrary to the letter of the statute and its spirit as applied to proceedings like those at bar.

The United States afterwards shift their position and rest on the direct proposition that the particular portion of section 819 covering challenges in misdemeanors is governed by the words "on the trial"; and they maintain, therefore, that, no matter how many indictments, yet, as there was here but one trial, it follows that there could be but a single set of challenges. They quote the following portion of the section: "On the trial of any other felony, the defendant shall be entitled to ten and the United States to three peremptory challenges; in all other cases, civil and criminal, each party shall be entitled to three

Digitized by Google

peremptory challenges; and in all cases where there are several defendants and several plaintiffs," etc. They then proceed: "A proper construction of the second clause [meaning the clause which we have quoted] is that upon the trial each party is entitled to three peremptory challenges, the phrase 'in all other cases' simply qualifying trial." They add: "The semicolon indicates that the thought is incomplete, and that the adverbial phrase is to be repeated." Thereupon they further say that the words "in all other cases, civil and criminal," should be interpreted as though they read, "On the trial, in all other cases civil and criminal." Then they conclude that, as the record shows there was but one trial, the case is governed by the letter of the statute as they claim it should be grammatically rearranged. It is so plain that this is a forced construction that we need make no observation about it, except to say that it is clearly met by Mutual Life Company v. Hillmon, 145 U. S. 285, 293, 12 Sup. Ct. 909, 36 L. Ed. 706, already referred to, and relied on by both parties. Such a construction necessarily means that under all circumstances, where cases have been ordered to be tried together, there can be but one set of challenges by all the proponents and one set of challenges by all the defenders; but Mutual Life Company v. Hillmon holds directly to the contrary for cases where suits against different defendants are ordered to be tried together under section 921 of the Revised Statutes.

The United States then proceed: "Suppose it be contended that there were nine trials in this case, or nine cases upon trial, yet the question is, how many defendants were there to this action?" The pertinency of this question is difficult to comprehend. The topic of the number of parties involved in such proceedings has been expressly disposed of by section 819 [U. S. Comp. St. 1901, p. 629] in connection with Mutual Life Company v. Hillmon. It in no way arises here, and it can throw no light on the case before us. In this connection, however, the United States maintain that Connecticut Mutual Insurance Company v. Hillmon, 188 U. S. 208, 23 Sup. Ct. 294, 47 L. Ed. 446, a continuation of the litigation in 145 U. S. 285, 12 Sup. Ct. 909, 36 L. Ed. 706, is favorable to their contention; but Connecticut Mutual Life Company v. Hillmon settled nothing, so far as we are concerned. There the trial court granted several sets of challenges, and the practical result was that its action in that respect was not disturbed. It is true that the Supreme Court did not touch the merits; consequently nothing was decided pro or con. Nothing was said even as dictum tending to sustain this position of the United States. The headnote at page 209, 188 U. S., page 294, 23 Sup. Ct., 47 L. Ed. 446, would lead to the understanding that the opinion states that the weight of authority is as claimed by the United States; but the opinion says nothing of the kind. The point before the trial court was the converse of what was decided by the Supreme Court in the earlier case. In the earlier case there were several distinct defendants in the various suits which were ordered to be tried together, and the Supreme Court held that, notwithstanding the cases were ordered to be tried together, each defendant was entitled to peremptorily challenge three jurors, to the same extent as though they had been tried separately. In Connecticut Mutual Insurance Co. v. Hillmon the trial court held that, inasmuch as there

Digitized by Google

were several distinct defendants in the original suits, though the same plaintiff in all, the plaintiff was entitled to several sets of peremptory challenges. Thereupon one of the defendants took out a writ of error to the Supreme Court. The opinion in behalf of that court observes (page 211, 188 U. S., page 295, 23 Sup. Ct., 47 L. Ed. 446), that the ruling of the trial court was the converse of the proposition established in the earlier case; but it held that under the circumstances the plaintiff in error was not prejudiced. It thus avoided the question before us.

The opinion in this case states at page 211, 188 U. S., page 295, 23 Sup. Ct., 47 L. Ed. 446, that the plaintiff in error cited a number of decisions in support of its construction of the statute, and it names one supposed to be to the contrary. We have examined the decisions cited, and we find that none of them bear on the question before us. After giving these citations, the opinion proceeds: "Conceding that the great weight of authority supports the proposition of the defendant, we are still of the opinion," etc. Thereupon the court disposed of the case as we have said. So far from stating, as said in the headnote, that the weight of authority was with the plaintiff in error, the opinion only conceded it for the purpose of argument. Thus a careful examination shows that the court decided nothing favorable to the United States with reference to the questions before us.

The truth is that there is no decision of the Supreme Court which can be held to be an adjudication of the question before us, and no expression from it, except what we have already quoted from Mutual Insurance Company v. Hillmon, 145 U. S. 285, 293, 12 Sup. Ct. 909, 36 L. Ed. 706, to the effect that by an order to try cases together "no defendant could be deprived without its consent of any right material to its defense, whether by way of challenge of jurors or otherwise." Within that expression, as we have already explained, the right asserted by the plaintiff in error by way of peremptory challenge was a "right material" to his defense; so that, therefore, if this citation could be regarded in its entirety as a definite ruling, it would be the end of this case. Assuming, however, that it cannot be so taken, we hold, as we have shown, that the right under discussion is a "right material" to the defense of the plaintiff in error, and that there is nothing in the positions submitted by the United States which requires us to interpret the language of the statutes to which we have referred as taking it away. Thus the United States not only fail to impress us that the statutes should be construed as they claim, but their propositions lead to the impression that, with all the ingenuity which their legal advisers possess, no satisfactory basis can be constructed by them.

We have not referred to section 1024 of the Revised Statutes [U. S. Comp. St. 1901, p. 720], which relates especially to consolidations of indictments. This section originated in 1853, while section 921 [U. S. Comp. St. 1901, p. 685] originated in 1813. So far as we can discover, both sections, under proper rules of construction, have full effect. So far as the topic we are discussing is concerned, section 1024 makes no provision for trying indictments together, but only that the court may order them to be consolidated. If this means anything more than was done in the present case, it certainly could have no just application to the indictments at bar. That section 1024 contemplates a proper con-

Digitized by Google

solidation may well be inferred from what has appeared in reference to it in the Supreme Court in Logan v. United States, 144 U. S. 263, 267, 296, 12 Sup. Ct. 617, 36 L. Ed. 429, and Williams v. United States, 168 U. S. 382, 18 Sup. Ct. 92, 42 L. Ed. 509. In McElroy v. United States, 164 U. S. 76, 77, 17 Sup. Ct. 31, 41 L. Ed. 355, 356, the opinion rendered by the Chief Justice in behalf of the Supreme Court, referring to section 1024, says: "The order of consolidation under this statute put all the counts contained in the four indictments in the same category as if they were separate counts of one indictment." This indicated that in the mind of the Supreme Court a proceeding under this section operated as a true consolidation. Therefore, in view of the special provisions of section 5480 [U. S. Comp. St. 1901, p. 3696], to which we have referred, proceedings on the indictments before us could not have been taken under section 1024, because so to do would be to defeat the letter and purpose of the statutory direction that only three distinct offenses should be included in one indictment. In In re Henry, 123 U. S. 372, 8 Sup. Ct. 142, 31 L. Ed. 174, it was held that section 5480 of the Revised Statutes did not prohibit the finding of several indictments each of which charged three distinct offenses within the same six months; but the Court of Appeals for the District of Columbia in Bass v. United States, 20 D. C. App. Cas. 232, 239, after reviewing In re Henry, held that several indictments found under that section could not be consolidated under section 1024. Therefore, finding for ourselves no occasion to question that the present proceeding was under section 921, we have followed the lead of each party in that respect.

Two decisions of the Circuit Court of Appeals in other circuits have been brought to our attention, namely, Stone v. United States, 64 Fed. 667, 12 C. C. A. 451, and Times Publishing Co. v. Carlisle, 94 Fed. 762, 36 C. C. A. 475. The earlier of the two cases seems to have gone off as did Connecticut Mutual Ins. Co. v. Hillmon, already referred to, the ruling being found on page 672, 64 Fed., page 455, 12 C. C. A. The case is not authority either way on the record before us. Times Publishing Co. v. Carlisle has weight in favor of the plaintiff in error, although the question before us was given such scanty attention that we do not feel justified in accepting the decision as authoritative. At page 780, 94 Fed., 36 C. C. A. 493, it sustains the position taken by the trial court, which was the same that was sought to be brought under review in Connecticut Mutual Insurance Company v. Hillmon, where a single plaintiff in three suits against different defendants, tried together, was allowed three full sets of peremptory challenges.

Without, however, considering further the decisions, we are satisfied that sound reasoning compels us to sustain the position that the plaintiff in error was entitled to three peremptory challenges on each indictment. While, therefore, we have questioned the proceedings in the District Court on other propositions, yet, being of the opinion that what observations we have made will render unnecessary any possible future application to us with reference thereto, we rest our conclusion on the fact that the District Court allowed the plaintiff in error only one set of peremptory challenges.

Digitized by Google

The judgment of the District Court is reversed, the verdict is set aside, and the case is remanded to that court for further proceedings in accordance with law.

ALDRICH, District Judge (dissenting). The several indictments against one and the same defendant relating to one and the same scheme to defraud, though technically presenting different cases because of different mailings of the same circular, were properly tried together under the order of court, and, being so tried, they became in every practical, substantial, and essential sense one case involving one trial. This being so, three peremptory challenges were all the defendant was entitled to. As a matter of substance, there is no greater reason for multiplying the challenges here than that which exists where similar charges are preferred in various counts in one indictment. Trying at one time the several indictments against a single defendant containing charges in respect to a single scheme to defraud based upon one and the same circular was in no way destructive of any substantial right material to the defense.

By order of court, and without objection, the cases, technically nine, though substantially one, were properly merged in one trial as one case. The object of the statutes authorizing such merger is to save expense and delay, and is as much in the interests of respondents as of the government. It would be a great hardship upon a respondent if criminal procedure conditions were such that he must be subjected to nine trials in a situation like that involved here.

The statutory right of three peremptory challenges "in all other cases" in terms applies as well to civil as to criminal cases. The idea of consolidation, or of an order that several cases shall be tried together, is always founded upon the fact that the cases involve substantially one controversy, and are, therefore, in a substantial and essential sense, one case. To so construe the statute in question as to preserve to each party in criminal and civil cases a peremptory right of full challenge in each of the cases merged for the purposes of one trial would defeat the object of the statute authorizing consolidation. Suppose it were a dozen civil cases, both parties exercising such rights under ordinary conditions would exhaust the panel and compel a continuance or a delay necessary to ordering new jurors, and all this without saving to the party or parties any substantial or essential right. The multiplied rule of 27 peremptory challenges under such circumstances as exist in this case would seriously obstruct the administration of the criminal law without saving to the respondent any substantial or beneficial right or advantage. The same would be true when the multiplied rule, if it obtains in criminal cases, shall be applied, as it logically and necessarily must be, to several civil suits tried together between private parties.

I cannot concur in the idea that Congress, in attempting to avoid delay and expense to parties by authorizing a trial, as one case, of cases technically several though essentially involving one controversy, intended to create a condition, both in civil and criminal cases, not upon grounds of reason or substantial justice, but through the right of mul-

Digitized by Google

tiplied peremptory challenges, which should defeat its purpose, and make the consolidated procedure more difficult of administration than that involved in the old procedure and the old way.

(132 Fed. 810.)

HIGGIN MFG. CO. v. MURDOCK.

(Circuit Court of Appeals, Sixth Circuit. October 15, 1904.)

No. 1,286.

1. PATENTS—INVENTION—SHELL FOR WHEEL HUBS.

The Higgin patent, No. 480,093, for a band-shell for wheel hubs, claims 1 and 2, which cover a shell having an annular groove for gripping the band and holding the shell in place, are void for want of utility in the device shown, and also for lack of patentable invention.

Appeal from the Circuit Court of the United States for the Southern District of Ohio.

This is a bill to restrain infringement of patent No. 480,093, to Henry Higgin, for certain improvements in band-shells for wheel hubs. The claims of the patent are as follows:

"(1) As an article of manufacture, a shell for hub-bands, having an inturned flange adapted to take over the point of the hub-band, and provided with an annular depression, substantially as and for the purpose specified.

"(2) As an article of manufacture, a shell for hub-bands, adapted to engage with the point of the hub-band, provided with an annular depression, and having a corrugated or knurled portion between its outer end and the annular depression, substantially as and for the purpose specified.

"(3) The combination, with a hub-band having an annular groove, of a shell adapted to engage with the point of the band, and provided with an annular depression adapted to take into the groove on the band, substantially as and for the purpose specified.

"(4) The combination, with the hub-band, B, having groove, b', and bead-ring, b, of the shell-band, C, having flange, c, and depression, c', and adapted to abut against the bead-ring of the band, substantially as and for the purpose specified."

The object of the inventor was to provide a self-securing band-shell. Figures 1 and 2 of the patent are shown below:

Fig. 1.

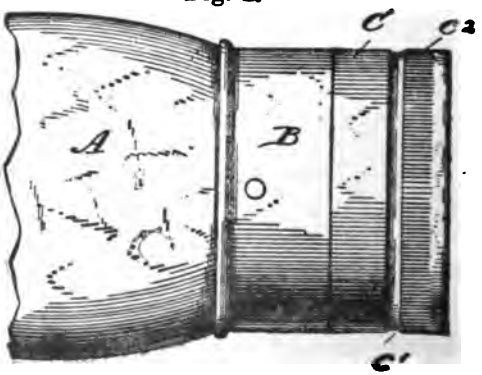

Digitized by Google

Fig. 2.

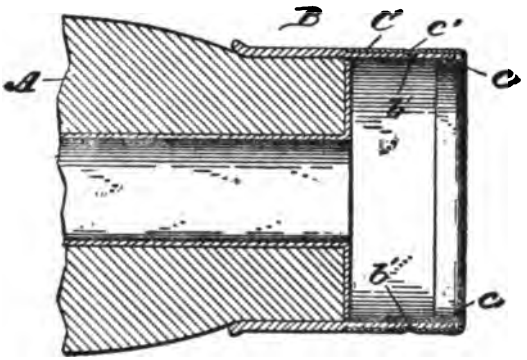

In his specifications the inventor says of these figures:

"A represents a wheel-hub, and B a hub-band. C is a band-shell, preferably of annealed brass, adapted to take over and closely embrace the band. The shell has an inturned flange, c, adapted to take over and into the point of the band, and a groove or depression, c', adapted to take into a corresponding groove or depression, b', in the band." He describes his shell as secured to the band "by pressing it thereon until the depression in the shell takes into the depression in the band, the shell having sufficient spring to insure its closing tightly over the band." He adds: "The joint thus made locks the shell in position, and affords a simple and efficient means of securing it in position, without requiring the use of special tools or machinery." In respect to the grooves in the band necessary to secure this sort of locking, he says: "The bands may be manufactured with the grooves ready cut, or the grooves may be made in bands, not thus provided, by simple and inexpensive tools," etc. Only the first and second claims are in issue.

A demurrer for want of patentable novelty was sustained, and the bill dismissed. This decree was reversed by this court upon the ground that "the presumptions of validity from the issuing of the patent were not so clearly overcome by the application of common knowledge as to warrant us in refusing to allow the complainant to go to the issue on the proof." 40 C. C. A. 491, 100 Fed. 459. The case came on again to be heard upon pleadings and evidence, whereupon the court held the claims in issue invalid, and dismissed the bill.

Henry W. Faber, George B. Parkinson, and Parkinson & Richards, for appellants.

Jones & James (Rankin D. Jones and Francis B. James, of counsel), for appellee.

Before LURTON, SEVERENS, and RICHARDS, Circuit Judges.

LURTON, Circuit Judge, after making the foregoing statement of the case, delivered the opinion of the court.

The third and fourth claims of the patent are limited to the use of the shell-band of the patent with hub-bands provided with a groove adapted to take in the corresponding depression in the shell-band when driven down, and the patentee mentions no other method of using his shell-band than in connection with hub-bands provided with a groove into which the annular groove of his shell-band might lock. The first and second claims cover the shell-band, with its annular groove, as an article of manufacture; the second claim including also a corrugated portion above the groove. Though it is quite possible that the patentee

Digitized by Google

only contemplated the use of his annular groove as a means of locking the shell in place when applied to a hub-band having a corresponding groove into which this annular rib might fit, yet if he has devised a means of holding such shell-bands in place upon hub-bands solely by reason of the gripping effect of such a rib, irrespective of an annular depression in the hub-band into which it might spring, he may maintain his first and second claims, which do not include as an element a hub-band having a depression adapted to receive such annular groove. This presents a question of utility first, and of patentable invention next. The learned trial judge thought, upon the evidence, that there was no important advantage in a band shell having an annular depression over one without it which closely fit the hub-band, and required some force to drive it down to its place. He also thought that if such an annular groove was a superior means of holding such shells in place, by reason of the gripping effect of such a rib, this means of holding did not involve patentable invention. We find no reason to differ with the learned court upon either ground.

A hub-band is an iron ferrule attached to the ends of a vehicle axle for the protection of the ends, and shielding the nut which holds the wheel on the axle. Shell-bands are thin metal cylinders, intended to be placed around the outer end of the hub-band for the purpose of ornamentation, and also to keep out moisture and prevent rusting of the iron parts. The use of such shell-bands is very old. Very many patents, some for the hub-band and shell, some for the band alone, and many for such metal shells, are in evidence. They differ mainly in the mode of holding the shell-band in place, and many ways of doing this are shown to have been in common use, or are taught by one or other of the numerous patents in evidence. In some cases the shell-band is secured by the ancient method of brazing or soldering; in others, by self-securing devices, such as spurs, spring clips, interlocking lugs, screw threads, bayonet locks, etc.; in still others, the shell is held in place by screws or rivets.

Mr. See, a learned expert, who testified for the complainant concerning the well-known methods of holding such ornamental shells in place, after referring to the methods above referred to, says that "shells could be pressed directly upon the iron hub-band." This, he says, was "the cheapest and nicest plan, * * * if it could be done satisfactorily." The objections he points out are that "the hub-bands could not be depended upon for accuracy of size, and the shells are required to fit with extreme niceness, and to be put on under heavy pressure." But these objections seem, on the evidence in this case, to apply with about equal force to shell-bands having an annular depression as a means of fastening. Exact uniformity in size or smoothness of surface of cast-iron hub-bands is no more to be expected when shell-bands are provided with annular grooves than when they are not. While it is true that hub-bands are generally of certain well-known standard sizes, yet the examples of such articles exhibited in this case show more or less irregularity in diameter, in taper, and in smoothness of surface, due to careless casting. Shell-bands are made, adapted to fit various standard sizes of hub-bands. If these shell-bands be exact cylinders, the place and extent of engagement when driven down over the hub-band necessarily depends upon the closeness of the fit of the

Digitized by Google

one upon the other. If the hub-band tapers too much, the contact between the lower portion of the shell and the hub-band may prevent any contact above at the point of the annular groove. It must fit closely enough to require some force to drive it on, and secure an engagement which will hold it fast in place. The metal, being ductile and having some resilience, will give slightly where the pressure is greatest; and this in itself furnishes a gripping or holding effect, which, according to the expert evidence, as well as the evidence of practical observers, is sufficient to hold such a shell in place, whether supplied with a gripping rib or not.

The defendant says he does not rely upon his annular groove as a means of holding at all, and that its presence in his device to an extent sufficient to constitute an annular groove is accidental, and that the very slight depression found in the shell-bands which he makes and puts upon the market is a mere ornament. To show that his annular groove does not grip, he has used certain exhibits which plainly indicate that in the particular instance there is no contact between his depressed groove and the hub-band; the shell-band being held tightly in place by close contact below the annular groove. But his exhibits, as well as the figures found in the brief, alike show that the taper in the hub-shell used was so great that a shell-band fairly close-fitting at the top was so tight when forced down to the shoulder as to prevent any possible contact between the depressed rib above and the surface of the hub-band. But given a case where the point of contact is the depressed groove, and there can be no doubt of the gripping effect of such a rib. To secure engagement by means of this gripping rib plainly requires a degree of adaptation of the shell-band to the particular hub-band which we are persuaded is not often found. Neither is it made out to our satisfaction that the gripping effect resulting from the contact of the lower wall of such a shell, though perfectly smooth, with the surface of an ordinary cast-iron hub-band, painted or not, is not for all practical purposes quite as efficient as if the engagement was only between a depressed groove and the surface of such a hub-band. In both cases care in the amount of force applied is essential to prevent buckling or cracking, and in both cases the tightness of the fit necessary to bring into play the gripping or holding effect will be such as to require some pressure to drive the shell into place.

But if we err in thinking complainant's annular groove to have no patentable utility, irrespective of the character of the hub-band upon which it is used, we cannot find reason for saying that the court below erred in holding that the use of such an annular groove as the sole means of fastening such shell-band in place involved invention. It may be conceded that the use of such a gripping rib as a means for attaching shell-bands prior to Higgin is not shown. But it was an old and well-known means of attachment, and required no adaptation or special skill to use it for this particular purpose. The same principle is exhibited in the lead pencil with a rubber tip enclosed within a thin metal cylinder, the latter having several annular depressions which grip the rubber and hold it in place. The common iron ferrule for canes, umbrellas, and jointed fishing rods afford other examples of the holding effect of such an annular groove.

Decree affirmed.

Digitized by Google

(131 Fed. 712.)

CHICAGO GREAT WESTERN RY. CO. v. RODDY.

(Circuit Court of Appeals, Eighth Circuit. July 18, 1904.)

No. 2,000.

1. TRIAL—DIRECTION OF VERDICT.

When the evidence leaves the material facts admitted or undisputed, and when the evidence leaves the material facts and the deductions from them of such a conclusive character that the exercise of a sound judicial discretion would permit the court to give effect to but one verdict, it is its duty to instruct the jury to return it.

When there is a substantial conflict in the evidence relating to the material facts, and when fair and rational minds may well draw different conclusions from established facts, the court should submit the issues to the jury.

2. INJURY TO RAILROAD EMPLOYÉ—DIRECTING VERDICT.

A rainstorm of extraordinary severity prevailed at Elma from 6 to 7 in the evening, and washed out the roadbed three-quarters of a mile south of that station. The sectionmen in charge of the section south from Elma and a telegraph operator were there. The heaviest portion of the storm ceased about 7, but lighter rain followed. The plaintiff, an engineer, was running north from Oelwein to Elma. He left Oelwein at 5. There was no storm south of New Hampton 15 miles from Elma. He passed that station at 7:30. Culverts and creeks were full of water, and low grounds were flooded at New Hampton and Alta Vista, a station four miles south of Elma. About 800 feet south of the washout a band of Italian trackmen attempted to warn the plaintiff of his danger, which they had discovered. But he did not observe their signals, or did not understand them. Neither the sectionmen nor the telegraph operator took any steps to patrol the track to discover its condition or to warn the enginemen of their danger before the plaintiff ran into the washout a few minutes past 8 in the evening, although they were at Elma, an hour had passed after the heaviest rain had ceased, and the washout was within a mile of the station.

Held, neither the absence of negligence of the sectionmen and telegraph operator, nor the contributory negligence of the plaintiff, was so clear that it was the duty of the court to give a peremptory instruction for the defendant.

3. CHARGE—REFUSAL OF REQUEST EMBODIED IN CHARGE.

Where a rule or principle of law is clearly declared by the court in its general charge, it is not error to refuse to repeat it in the words of counsel.

4. CHARGE—REFUSAL OF REQUEST CONTAINING SOUND AND UNSOUND PROPOSITIONS.

Where a request for an instruction contains several propositions of law, any one of which is unsound, it is not error to refuse it.

(Syllabus by the Court.)

In Error to the Circuit Court of the United States for the District of Minnesota.

John L. Erdall (A. G. Briggs and F. B. Kellogg, on the brief), for plaintiff in error.

Daniel W. Lawler (Frank Arnold, on the brief), for defendant in error.

Before SANBORN, VAN DEVANTER, and HOOK, Circuit Judges.

¶ 1. See Trial, vol. 46, Cent. Dig. § 377.

Digitized by Google

SANBORN, Circuit Judge. This is an action for damages for a personal injury which the plaintiff below, John J. Roddy, alleged was inflicted upon him by the negligent failure of the Chicago Great Western Railway Company to give him timely warning of a washout of the roadbed, which was caused by an unusual storm of rain. The railway company denied the alleged negligence, and averred that the plaintiff was guilty of negligence which contributed to his injury. At the close of the evidence a motion was made by the defendant, and denied by the court, to instruct the jury to return a verdict for the railway company, and a judgment for the plaintiff followed. The denial of this motion is the alleged error in which counsel for the company seem to place the most confidence, and it presents the usual question whether the evidence so conclusively failed to show causal negligence on the part of the railway company, or so clearly disclosed negligence on the part of the plaintiff which contributed to the injury, that it was the duty of the court, in the exercise of a sound judicial discretion, to withdraw the issues in the case from the jury.

There is always a preliminary question for the judge before a case can be properly submitted to the jury, and it is, not whether or not there is any evidence, but whether or not there is any substantial evidence, upon which a jury may properly render a verdict in favor of one of the parties to the action. If there is no such evidence to sustain a verdict in favor of one of the parties, it is the duty of the court to direct the jury to return a verdict against him. This duty is imposed upon the court in every case where the evidence and the rational deductions from it are undisputed, or of such a conclusive character that the exercise of a sound judicial discretion would compel a refusal to give effect to a contrary verdict. Southern Pacific Co. v. Pool, 160 U. S. 438, 440, 16 Sup. Ct. 338, 40 L. Ed. 485; Patton v. Texas & Pacific Railway Company, 179 U. S. 658, 660, 21 Sup. Ct. 275, 45 L. Ed. 361, and cases there cited. The exercise of this judicial discretion requires the direction of a verdict in every case in which the substantial evidence leaves the material facts and the just deductions from them admitted, undisputed, or so conclusively established that all reasonable men, in the exercise of an honest and impartial judgment, may fairly draw but one conclusion from them. On the other hand, if the facts are in dispute, and there is a conflict in the substantial evidence relative to their existence, or if from the established facts the minds of rational men might well draw different conclusions, it is the duty of the court to submit the disputed issues to the jury. Chicago Great Western Ry. Co. v. Price, 38 C. C. A. 239, 243, 97 Fed. 423, 427, 428, and cases there cited.

At the close of the trial of this case there was evidence tending to establish these facts and circumstances: Roddy was the engineer on a freight train of the defendant which was running north from Oelwein, in the state of Iowa, toward St. Paul, in the state of Minnesota. He left Oelwein at about 5 in the afternoon of May 19, 1902. He stopped at New Hampton, a station 15 miles south of Elma. He left New Hampton about 7:30 in the afternoon. He passed through Alta Vista, a station four miles south of Elma, about 8 in the

Digitized by Google

evening, without stopping, and he ran into a washout, which derailed his engine and seriously injured him, a few minutes after 8 o'clock, at a place about three-quarters of a mile south of the station of Elma. An unusually heavy rain storm prevailed at Elma and for a distance of 15 miles south of that station from 6 until 7 that afternoon, and lighter rain followed between 7 and 8. This storm was so extraordinary that one of the witnesses testified that he never saw it rain harder, so unusual that the telegraph operator at Elma remained at the station for an hour before he ventured forth for his supper, and all men seem to have taken shelter until 7 o'clock in the evening. Roddy was traveling south of the storm when it passed, and the only notice he received of its character was from the flooded condition of the country from New Hampton to Elma, and from the acts of the pedestrians he passed. At New Hampton there was so much water that it would not pass through a large culvert, and it backed up against the roadbed and covered several acres of land. At Alta Vista it carried away sidewalks, rose from 8 to 10 feet higher than usual, and within 2 or 3 feet of the railroad bridge which spanned a creek, overflowed the banks of the creek, and covered the surrounding fields. It did not, however, reach the ties of the railroad or interfere with the operation of the train at this point. At Alta Vista one of the witnesses motioned to the plaintiff as he passed over the bridge and pointed to the high water, but he did not attempt to stop the train. When Roddy came within a few hundred feet of the washout, he met and passed a band of Italian laborers who had been engaged in repairing the roadbed and track at Elma, and who were returning to Alta Vista, where they boarded and spent the nights. He had met and passed these men on other days. They were not the sectionmen in charge of this part of the railroad, and Roddy was aware of this fact. They had discovered three washouts in the roadbed on their way south from Elma at about 8 in the evening, and their foreman had instructed Mascolene, one of their number, to go south and stop Roddy's train, while he went back to Elma to notify the telegraph operator. Mascolene was carrying two lighted lanterns. He testified that he saw Roddy's train coming and "went to flag it, but it was so windy the lanterns went out"; that he was then on the ends of the ties; that he motioned to Roddy to stop the train with his arm, and called to him to the same effect, but that the train went on and he jumped into the ditch. Several of the Italians corroborated this evidence, and testified that they also signaled and called to the engineer to stop his train. Roddy and his fireman testified that they saw the Italians, but that they did not see or hear any signal to stop; that they did not recognize in the calls and gesticulations of the Italians anything different from their usual outcries and motions when they passed the train. At this time it was not so dark that the engineer could not see these trackmen and their movements, it was between daylight and dark, the headlight of the engine was burning, and the signal lights at Elma were lighted.

The storm struck Elma at 6 in the afternoon. Several of the sectionmen whose duty it was to care for the condition of a section of five miles of this railroad extending south from Elma were at

Digitized by Google

the station there between 6 and 7:45 that evening. The rules of the company required that all hands should be detailed during heavy storms to watch the road, that every precaution should be taken to prevent accident, and that agents, telegraph operators, and bridge and section men should telegraph the train dispatcher information as to severity of storms and extent of damage done, and that they should impart information to train and engine men. There was no evidence that the telegraph operator or sectionmen at Elma detailed any one to examine or watch the track south of that station, or that they took any steps to ascertain its condition or to warn the crew on Roddy's train of any defects in it during the two hours between the time when this storm struck that station and the derailment of the train three-quarters of a mile south of it. There was ample time between 7 in the evening, when the heaviest of the rain had passed, and the accident, more than an hour later, for the sectionmen to have patrolled this track, found the defects, sent a telegram to Alta Vista, and covered the track south of the washout with flagmen, torpedoes, and other danger signals. Under the statutes of Iowa railroad companies are liable for injuries inflicted by the negligence of the fellow servants of the victims, and the evidence in this case fails to lead our minds to the conclusion that all reasonable men in the exercise of an impartial judgment would be compelled, or would be likely, to conclude, in the light of the rules of the company, of the unusual virulence of the storm, and of the responsible nature of the duties intrusted to them, that the telegraph operator and the sectionmen at Elma exercised ordinary care to patrol this track, to ascertain and to warn the enginemen who were operating trains upon it of the danger from it, when, without making any effort to do either, they permitted Roddy to run into the pit in the roadbed within a mile of their station an hour after the heavier part of the storm had ceased.

Did the evidence conclusively establish the contributory negligence of the plaintiff? It was his duty to operate his engine with care, and to keep a constant and vigilant lookout upon the track to detect and avoid danger. The rules of the company required him to watch track, bridge, and watchmen to see the signals they were required to give, and, when circumstances rendered it necessary, to reduce speed to avoid unnecessary risk. In case of an extraordinary rainstorm or high water they imposed upon him the duty to stop his train and send a man ahead to examine embankments, bridges, trestles, culverts, and other portions of the road liable to damage, before passing over, to make careful inquiry at all stopping places to ascertain the extent and severity of the storm, and, in case of doubt as to safety in proceeding, to place his train on a siding and to remain there until it was safe to go on. Roddy did not reduce, but he probably increased, the speed of his train. He did not stop and send a man ahead to examine any embankment or bridge. He did not inquire as to the severity of the storm. He either did not observe or he did not understand the signals of the Italians for him to stop, if these signals were given. Was this course of action conclusive evidence of his failure to exercise ordinary care? In the determination of this question the alleged warning of the Italians

Digitized by Google

must be laid out of consideration. They testified that they gave the signals to stop by word and by gesture. The engineer and fireman testified that they were looking at them as they passed, but that they saw no such signals. There is here substantial evidence sufficient to sustain a finding by a jury either way upon the issue of the plaintiff's negligence in disregarding this disputed warning, and that issue was properly submitted to their determination. It may, however, be remarked in passing that it is not very probable that Roddy would have run on into the pit in the roadbed if he had seen and had understood the signals of the Italians for him to stop. The lights in Mascolene's lanterns went out, so that the engineer probably never saw them. Mascolene did not stand between the rails of the track to give his signals as he should have done, but upon the side of the track. Few, if any, of the Italians could speak English, so that it may be that the engineer did not understand what they said. These facts go far to explain their failure to convey their warning of danger to the mind of the engineer as he gazed at them from the window of his cab. What more is there in the evidence to sustain the demonstration that a reasonable man in the situation of the plaintiff would have perceived the danger, and would have stopped or inquired or sent a man forward to examine the roadbed? The filled culverts, the flooded fields and streets at New Hampton and at Alta Vista, and the gesticulating citizen at the latter place who gave no signal to Roddy to stop his train. But the care of the roadbed and of the track was intrusted primarily to the sectionmen at Elma, the operation and care of the engine and of the train to the plaintiff, Roddy. The primary duty of inspection, of watchfulness, and of preparation of the track for the passage of Roddy's train was upon the sectionmen at Elma. The duty of discovery and of warning of defects was in the first instance upon them and upon the telegraph operator, both on account of the nature of their employment, and on account of the fact that they had seen and had experienced the storm, while Roddy had not. Roddy's primary duty was to operate his engine and draw his train with reasonable care. The sectionmen and the telegraph operator had been in the midst of the storm. They knew its violence; they had the best opportunity to judge of its natural and probable effects. He had come from a region beyond that traversed by the heavy rain, and had not experienced it. It had passed over Elma an hour before he arrived in its vicinity and half an hour before he stopped at New Hampton, and he had received no warning of danger from the station at Elma, where the men in charge of the five miles of roadbed and track south of that station and the telegraph operator were located. The presumption of law and of fact, in the absence of countervailing evidence, always is that servants as well as masters have done their duty. And, while the negligence of the operator and of the sectionmen is no excuse for any negligence of Roddy, the fact that it was their duty to watch this roadbed and to give notice of any defects in it, together with the fact that when Roddy was within two miles of Elma they had given no notice of danger to him, might well be considered by the jury in determining whether or not a reasonable man in his situation

Digitized by Google

might not have justly inferred from the silence of the men in charge of this section of track which he was using, either that the storm had not been so violent as to endanger it, or that, if it had been so, the sectionmen had already patroled it and found it free from damage, so that he could safely drive his engine over it without special inquiry, and without stopping and sending a man forward to patrol it. It is not clear to our minds that such an inference and such a course of action would indicate to all reasonable men any lack of ordinary care, much less that it would compel their minds to that conclusion, and for that reason the evidence in this case fails to convince that the contributory negligence of the plaintiff was conclusively established.

In the consideration and determination of the questions which have been discussed, all the evidence in this case has been carefully read and considered, but no attempt has been made to do more in this opinion than to present its salient points. Many of the material facts were the subjects of contradictory testimony. Fair and rational minds might well draw different conclusions from the facts that were established. The evidence left the issues of negligence and of contributory negligence in doubt, and the court below was guilty of no abuse of judicial discretion in denying the motion for a peremptory instruction and submitting the issues to the jury for decision.

No exception to the charge of the court was taken. Thirteen separate requests for instructions, which cover four closely printed pages of the record before us, were presented to the court below, and were denied "save as the same may be given in the general charge." Five of these refusals are assigned as error. The requests to which they relate have been critically compared with the charge of the court, without the discovery of any prejudicial error in the refusal to submit them to the jury. The rules of law embodied in them, so far as they were applicable to the case, and so far as it was the duty of the court to communicate them to the jury, are found in the charge in terms as concise, clear, and expressive as those in which they are stated in the requests of counsel. Where a rule or principle of law is clearly declared by the court in its general charge, it is not error for it to refuse to repeat it in the words of the attorney who requests it. Southern Pac. Co. v. Schoer, 52 C. C. A. 268, 275, 114 Fed. 466, 473, and cases there cited.

One of the most serious complaints of the railway company regarding these requests is that the court refused to charge that the plaintiff must either establish by a preponderance of evidence that the servants of the defendant had actual knowledge of the washout so long before the derailment that by the exercise of reasonable care they could have repaired the track or warned the plaintiff before the derailment, or that he must establish by a preponderance of evidence that the washout occurred so long before the derailment that the defendant or its servants, in the exercise of reasonable care, ought to have discovered it, and that after such discovery there was sufficient time for the defendant or its servants, in the exercise of such reasonable care, to have repaired said track, or to have given the plaintiff the necessary warning of its condition. The statement

Digitized by Google

contained in this request is altogether too involved, refined, and technical, and it is not the law. If the storm was so violent and the rains so copious before 7 in the evening of the day of this derailment that great damage to the roadbed and track was to be reasonably anticipated from it, the duty was immediately imposed upon the sectionmen to patrol that track and to ascertain its condition. If they had done this, and had discovered a large volume of water flowing over or under the roadbed at the place of the accident which had not then undermined the track, but which constantly threatened to carry out a section of it, it would have been as much their duty to go forward and warn the plaintiff of the danger of driving his engine upon it as it would have been if the washout had actually occurred when they first discovered the danger. And if after they would, by the exercise of reasonable diligence, have discovered and have warned the plaintiff of the imminent danger that the track would be undermined, and before he arrived at the place of the accident the track had washed out, their care would have saved him from injury; while if, in the exercise of reasonable care, they could in this way have accomplished this result, their failure to exercise this care inflicted his injury. The time of the occurrence or of the discovery of the washout was not the sole condition or evidence of the negligence of the servants of the defendant. The violence of the storm, the copiousness of the rain, and the probable effect to be anticipated from them, conditioned the duty of the sectionmen and of the telegraph operator and the question of their negligence, whether the washout occurred long enough before the accident for them to have discovered it and to have given the warning or not, because the storm and the rain which caused the defect in the roadbed gave them warning of the natural results which would follow from them so long before the derailment that they might have discovered the actual condition of the roadbed and have given warning of the danger whether the track was then actually undermined or was only in imminent danger of it.

Error is also alleged because the court did not deliver to the jury the charge upon the preponderance of evidence which is embodied in the long request we have been considering. As, however, the proposed instruction contained two propositions of law, one of which has been found to be unsound, there was no error in the court's refusal to communicate the other. Where a request for an instruction contains two or more propositions of law, one of which is unsound, there is no error in a refusal to grant it. United States v. Hough, 103 U. S. 71, 72, 73, 26 L. Ed. 305; Monarch Cycle Co. v. Royer Wheel Co., 44 C. C. A. 523, 526, 105 Fed. 324, 328.

One of the rules of the railway company in evidence requires the engineer to keep a constant and vigilant lookout, and counsel for the company requested the court to charge the jury that "it was the plaintiff's first and paramount duty while his train was in motion to keep a constant and vigilant lookout along the track, and to take all precautions for the safety of himself and his train that a reasonably prudent man would take under the same circumstances." The court charged the jury that the plaintiff was required to use

Digitized by Google

due care not only for his own protection, but for the protection of the property intrusted to his charge; that he had to a very large extent the charge of the running of his train; that it was his duty to observe the condition of the road he was passing over, to determine as far as things came under his observation as to his safety; that he had the opportunity to observe the condition and extent of the flood, the condition in which it left the streams and the country, and the roadbed; and that the rules which he was required to observe referred to cases of the kind under consideration, and declared what his duties in such cases were. It then instructed the jury that it was for them to determine from the evidence whether the plaintiff performed the duties which a reasonable man in the performance of his employment, and under the rules which he was required to observe, would have performed, or whether he should have stopped his train and sent out persons ahead at any place for the purpose of ascertaining whether there was danger in the condition of the track resulting from the effect of the storm. The charge of the court here embodies the principle of law referred to in the request, and expresses it in more felicitous language than that used by counsel for the railway company. It called the attention of the jury to the rule which required the engineer to keep a constant and vigilant lookout, and it left the counsel of the company without any tenable ground for the exception to the refusal to grant their request.

The differences between the other requests which were refused and the charge of the court are less striking and important than those which have been noticed. There was no substantial error in the trial of this case, and the judgment below is affirmed.

(131 Fed. 719.)

KUNTZ v. YOUNG.

(Circuit Court of Appeals, Eighth Circuit. July 28, 1904.)

No. 2,029.

1. BANKRUPTCY—DISCHARGE—FAILURE TO APPLY FOR DISCHARGE IN SUBSEQUENT PROCEEDING.

   A failure of the bankrupt to apply in due time for, or a refusal by the court to grant, a discharge from debts provable in proceedings under one petition in bankruptcy, renders the question of the right of the bankrupt to a discharge from those debts in a proceeding under a subsequent petition res adjudicata.

2. SAME.

   A subsequent proceeding in bankruptcy for the sole purpose of obtaining a discharge which a prior proceeding has conclusively determined that the bankrupt is not entitled to presents no ground for relief, is vexatious and futile, and cannot be lawfully maintained.

3. SAME—COURT HAS POWER TO DISMISS AFTER ADJUDICATION.

   The District Court has power to dismiss such a proceeding, as soon as it learns its real purpose, under section 2, subd. 15, Bankr. Act July 1, 1898, c. 541, 30 Stat. 546 [U. S. Comp. St. 1901, p. 3421], although this is after an adjudication in bankruptcy.

¶ 1. See Bankruptcy, vol. 6, Cent. Dig. § 690.

Digitized by Google

4. SAME—FACTS—DECISION.

An involuntary proceeding in bankruptcy was commenced. The bankrupt made no application for a discharge within 12 months after the adjudication, and failed to comply with an order to pay over to the trustee $6,185.37. While this proceeding was pending the bankrupt commenced a voluntary proceeding in another division of the same court, and applied for a discharge from the same debts scheduled and provable in the first proceeding. *Held*, the District Court rightly denied the application for the discharge and dismissed the voluntary proceeding.

(Syllabus by the Court.)

Appeal from the District Court of the United States for the District of Minnesota.

William P. Murphy, Halvor Steenerson, and Charles Loring, for appellant.

Frank H. Ewing, E. H. Morphy, and John M. Bradford, for appellee.

Before SANBORN, VAN DEVANTER, and HOOK, Circuit Judges.

SANBORN, Circuit Judge. May a bankrupt who has failed to apply for a discharge within the 12 months after his adjudication of bankruptcy upon a petition of creditors lawfully maintain a voluntary proceeding in bankruptcy and obtain a discharge from the very debts scheduled and provable in the involuntary proceeding while the latter is still pending? The record in this case is meager, and it discloses nothing relative to many of the motions and adjournments which are referred to by counsel for the respective parties in the briefs. The case must be determined upon the presumption that the rulings of the court below were made after due notice, and were right, unless the record discloses some error. The burden is always on him who challenges the rulings or decree of a trial court, not only to specify errors, but to prove them by the record which he presents to the reviewing court. The error here alleged is the rendition of a decree of dismissal of a voluntary proceeding in bankruptcy and a denial of a petition for the discharge of the bankrupt in this state of the facts: In January, 1899, Oscar Kuntz was adjudged a bankrupt in one of the divisions of the District Court of Minnesota upon the petition of certain of his creditors. In the progress of this proceeding the referee found that in the year 1898 Kuntz was a general merchant in a small village in Minnesota, and that he so conducted his business that between September 18, 1898, and December 27, 1898, a deficit of $8,185.37 arose, for which he failed to account. Thereupon the referee made an order that he should pay over to the trustee of his estate $6,260.37. He paid $75, and no more. The order was never reversed, modified, or obeyed. The bankrupt made no application for a discharge within 12 months of his adjudication, and the involuntary proceeding is still pending awaiting his compliance with the order of the referee. In April, 1903, Kuntz filed a voluntary petition in bankruptcy in another division of the District Court for Minnesota, secured another adjudication of bankruptcy, scheduled the same debts and creditors that appeared in the invol-

Digitized by Google

untary proceeding, and on July 7, 1903, filed a petition in the voluntary proceeding for a discharge from these debts. The court appointed August 3, 1903, for a hearing of this petition. On August 5, 1903, a petition of the trustee of the estate of the bankrupt in the involuntary proceeding, which set forth its course and condition, was presented to the court in the voluntary proceeding, and it issued an order that the bankrupt should show cause why the voluntary should not be consolidated with the involuntary proceeding, and why all proceedings relating to the closing of the estate and to the application for the discharge should not be conducted in the latter. Upon the return day of this order the application of the bankrupt for his discharge and the petition of the trustee came on to be heard. Counsel for the respective parties appeared, and a decree was rendered, which denied the application for the discharge and dismissed the voluntary proceeding without prejudice to the right of the bankrupt to commence another after the involuntary proceeding should be closed.

The salient facts which condition the determination of the chief question in the case are, therefore, that there was an involuntary proceeding in bankruptcy pending, in which the bankrupt had disobeyed the order of the referee, and had failed to apply for a discharge within 12 months after his adjudication, and that he had instituted a voluntary proceeding, and had there applied for a discharge from the same debts scheduled and provable in the involuntary proceeding. The failure of the bankrupt to apply for a discharge from his debts in the involuntary proceeding within 12 months after the adjudication foreclosed his right to such a discharge. It is only within that time that he may, under the bankruptcy law, make a lawful application to be relieved from his debts. The record of his failure to make the application in that proceeding was, in effect, a judgment by default in favor of his creditors to the effect that he was not entitled to a discharge from their claims. A judgment by default renders the issue as conclusively res adjudicata as a judgment upon a trial. The result is that the question whether or not the bankrupt was entitled to be discharged from the claims of the creditors scheduled and provable in the involuntary proceeding was conclusively determined in an action between them and the bankrupt by the record of his failure to apply for a discharge in that proceeding. But the parties to the voluntary were the same as to the involuntary proceeding, for Kuntz scheduled the same claims and creditors, and the trustee who objected to his discharge was the legal representative of the latter. The bankrupt's application for a discharge in the voluntary proceeding presented the same issue which had been conclusively determined against him in the involuntary proceeding, and there was no error in the refusal of the court below to reverse the former judgment and grant the application.

The denial of an application for a discharge from debts provable in proceedings under one petition in bankruptcy under the act of 1898 renders the issue of a right to a discharge from those debts in a proceeding under a subsequent petition res adjudicata. A failure to apply for a discharge within 12 months after the adjudication in

Digitized by Google

the earlier proceeding has the same effect. Gilbert v. Hebard, 8 Metc. (Mass.) 129; In re Drisko, Fed. Cas. No. 4,090; In re Herrman (D. C.) 102 Fed. 753, 754; Id., 46 C. C. A. 77, 106 Fed. 987, 988.

It is said, however, that the dismissal of the voluntary proceeding was, in any event, erroneous, and unauthorized. Why was it so? The record does not disclose that the bankrupt brought any property to the court to be distributed among his creditors when he presented his petition for a second adjudication in bankruptcy. The sole purpose of that proceeding, so far as we may learn it from the record presented here, was to enable the bankrupt to raise the very issue which the record in the involuntary proceeding had conclusively determined—the issue whether or not he was entitled to a discharge from the debts there scheduled and provable. The voluntary proceeding was in fact nothing but a suit in equity to obtain a discharge. The second adjudication in bankruptcy, the appointment of the trustee, his report, and every other act in that proceeding were nothing but steps in the progress of the suit for the discharge. For any other purpose they were both farcical and futile. As there was no equity in the suit for the discharge, and the bankrupt was entitled to no relief in it, it was properly dismissed. A voluntary proceeding in bankruptcy for the sole purpose of obtaining a discharge which a prior involuntary proceeding has conclusively determined that the bankrupt is not lawfully entitled to presents no ground for relief, is vexatious and futile, and should be dismissed. In re Fiegenbaum, 121 Fed. 69, 57 C. C. A. 409.

Other objections to the decree are that the application for the discharge was improperly denied because no specifications of objections to the discharge were ever made, that the order to show cause was an irregular proceeding, that it was not properly served on the bankrupt, and that the court was without power to dismiss the voluntary proceeding. But the disclosure by the petition of the trustee that the issue of the discharge of the bankrupt was conclusively determined was a sufficient and fatal objection to the application for it, and any other would have been useless. An order to show cause why a certain act should not be done or a certain course pursued is the regular and approved method of giving notice of contemplated action to parties to suits and proceedings in equity and bankruptcy, and the terms of this order were sufficiently broad and general to suggest notice of, or to warrant a dismissal of, the proceeding and a denial of the discharge. It is true that the record fails to disclose that the order to show cause was ever served upon the bankrupt, but his counsel made a general appearance for him at the hearing upon it, and this was a waiver of any defect or failure in its service.

Nor was the court without power to dismiss the voluntary proceeding. That proceeding was a mere device to evade the order of the referee and to secure indirectly what the bankrupt evidently despaired of obtaining otherwise. It entailed unnecessary expense and vexation upon the creditors and upon the court. Its continuance was a constant menace and annoyance to the creditors, and there was no sound reason for its existence. Ample power to dismiss it, even after the adjudication in bankruptcy, was vested in the

Digitized by Google

District Court under section 2 of the bankrupt act of July 1, 1898, c. 541, 30 Stat. 545 [U. S. Comp. St. 1901, p. 3420].

The decree below is affirmed.

(131 Fed. 175.)

PHŒNIX BRIDGE CO. v. CASTLEBERRY.

(Circuit Court of Appeals, Fourth Circuit. May 25, 1904.)

No. 499.

1. JUDGMENTS—COLLATERAL ATTACK—FEDERAL AND STATE COURTS.

The jurisdiction of a court to render a judgment is always subject to collateral attack and inquiry in a court of another sovereignty in which such judgment is relied on, and in such respect federal and state courts are foreign to each other, although sitting within the same state.

2. SAME—FEDERAL COURTS—FOLLOWING STATE DECISIONS.

The right of collateral attack on a judgment is a matter of general law as to which the decisions of the courts of a state are not binding on a federal court.

3. ADMINISTRATION OF ESTATES—PRIORITY OF JURISDICTION—SOUTH CAROLINA STATUTE.

Under 2 Code Civ. Proc. S. C. § 48, which provides that, "when any probate court shall have first taken cognizance of the settlement of the estate of a deceased person such court shall have jurisdiction of the disposition and settlement of all the personal estate of such deceased person to the exclusion of all other probate courts," that court first "takes cognizance of the settlement" of an estate which first grants letters thereon, which is the first judicial act in the proceeding, the petition being ex parte, and the issuance of citation thereon ministerial.

4. MASTER AND SERVANT—INJURY OF SERVANT—RULE GOVERNING MASTER'S DUTY.

The rule as to the duty of a master in respect to providing a safe place to work is not applicable to a case where a servant is injured by reason of defects in or insufficiency of a temporary structure, such as a scaffolding or framework for supporting heavy materials, which are appliances or instrumentalities by means of which the work is to be done.

5. SAME—APPLIANCES OR TEMPORARY STRUCTURES.

When, by the express or implied contract between the master and servant, the former undertakes to furnish the necessary tools or appliances, it is his duty to use ordinary care to see to it that such instrumentalities are safe and suitable; and as this duty, when it exists, is one of the absolute or personal duties, any servant to whom the master delegates it is pro hac vice a vice principal, for whose negligence the master is responsible. But where, by the express or implied contract, the master undertakes merely to furnish the materials needed for the construction of some appliance, which is to be constructed by the workmen themselves, as incident to the main work, the master's duty is performed if he furnishes suitable material and competent workmen, and the negligence of a foreman in charge of the construction by which a workman is injured is that of a fellow servant, for which the master is not liable.

¶ 2. State laws as rules of decision in federal courts, see note to Griffin v. Wheel Co., 9 C. C. A. 548; Wilson v. Perrin, 11 C. C. A. 71; Hill v. Hite, 29 C. C. A. 553.

Digitized by Google

6. SAME—RULE APPLIED—INSPECTION.

A bridge company sent a force of men under a foreman to make repairs on a railroad bridge, consisting in part of replacing certain old parts with heavy steel girders. In doing this, it was necessary to construct on the spot wooden frames or bents to support the weight of the girders while they were being put in place, and they were made by the workmen as an incident to the work. Owing to the defective construction or condition of one of such frames, which had been erected three days before, a girder fell, and killed one of the workmen. *Held* that, in the absence of evidence that the materials furnished by the company were not in all respects suitable and sufficient to make a safe structure, it was not liable for the negligence of the foreman either in the construction of the frame or in failing to inspect it on the day of the accident.

In Error to the Circuit Court of the United States for the District of South Carolina, at Charleston.

J. S. Muller, for plaintiff in error.

Stanyarne Wilson and J. Q. Marshall, for defendant in error.

Before GOFF, Circuit Judge, and BRAWLEY and McDOWELL, District Judges.

McDOWELL, District Judge. S. J. Castleberry, an inhabitant of Spartanburg county, S. C., was, on August 26, 1901, killed while employed in repairing a bridge. His wife, Effie Castleberry, petitioned the probate court of Richland county (in which the decedent had no estate and of which he was not a resident) for letters of administration on August 29, 1901. Citation was issued by that court on the same day, and letters of administration were granted Effie Castleberry on September 19, 1901. On August 30, 1901, Jas. H. Castleberry, the father of the decedent, filed his petition for letters of administration in the probate court of Spartanburg county. Citation issued the same day, and letters of administration were granted on September 16, 1901. On September 17, 1901, Jas. H. Castleberry instituted the present action in a state court of South Carolina, which was removed to the federal court; and on September 21, 1901, Effie Castleberry, in the same state court, instituted her suit for the same cause of action against the plaintiff in error here. On December 4, 1902, Effie Castleberry applied for and obtained from the probate court of Richland county an order revoking the letters granted her by that court, in which order is a recital that the court had acted under a misapprehension, and had not had the right to issue letters of administration. And on December 9, 1902—the day the trial of the case at bar was commenced in the federal Circuit Court, and just before it was commenced—Effie Castleberry dismissed her action against the plaintiff in error here. The jury rendered a verdict for the plaintiff below and judgment was entered in accordance therewith.

It is contended for the plaintiff in error that the plaintiff below did not have title as administrator at the time of the institution of this action. The trial court decided this question against the plaintiff in error, and this is the first error assigned here. The statute law of South Carolina bearing on the question here presented is as follows (2 Code Civ. Proc.):

"Sec. 37. Every judge of probate in his county shall have jurisdiction in all matters, testamentary and of administration, in business appertaining to

Digitized by Google

minors and the allotment of dower, in cases of idiocy and lunacy, and of persons non compotes mentis."

"Sec. 39. The probate of the will and the granting of administration of the estate of any person deceased shall belong to the judge of probate for the county in which such person was last an inhabitant; but if such person was not an inhabitant of this state, the same shall belong to the judge of probate in any county in which the greater part of his or her estate may be.

"Sec. 40. All proceedings in relation to the settlement of the estate of any person deceased shall be had in the probate court of the county in which his will was proved, or administration of estate was granted."

"Sec. 48. When any probate court shall have first taken cognizance of the settlement of the estate of a deceased person, such court shall have jurisdiction of the deposition [disposition] and settlement of all the personal estate of such deceased person to the exclusion of all other probate courts."

"Sec. 49. The jurisdiction assumed by any probate court in any case, so far as it depends on the place of residence or the location of the estate, shall not be contested in any suit or proceeding whatever, except in an appeal from the probate court in the original case, or when the want of jurisdiction appears on the record."

Rev. St. § 2027 (1901):

"The judge of probate shall grant administration in the following manner: After requiring the person or persons applying therefor to file a petition in writing, he shall issue a citation to the kindred or creditors of the intestate or person deceased, to show cause, if any they have, why administration shall not be granted to the person or persons applying therefor," etc.

The alleged invalidity of the grant of letters of administration to the plaintiff below by the Spartanburg court is founded on section 48 of volume 2, Code Civ. Proc., supra.

It is a settled rule of law of the state courts of South Carolina that the first grant of letters of administration by a domestic probate court—even when made by a court not having jurisdiction of the particular estate in question—cannot be collaterally attacked. Petigru v. Ferguson, 6 Rich. Eq. 380. See, also, Turner v. Malone, 24 S. C. 398; Ex parte Crafts, 28 S. C. 281, 5 S. E. 718. And this rule was followed by at least two of the subordinate federal courts in respect to a judgment of a probate court of the state in which these federal courts were sitting. Holmes v. Oregon & C. R. Co. (D. C.) 5 Fed. 523; Id. (C. C.) 9 Fed. 229. But we regard these opinions as overruled by the Supreme Court in later cases cited herein below. However, the courts of the state in which a federal court sits are not domestic courts quoad the federal court. The two courts are created by and exist under different governments. Swift v. Meyers (C. C.) 37 Fed. 43; Hekking v. Pfaff, 91 Fed. 60, 33 C. C. A. 328, 43 L. R. A. 618; Pennoyer v. Neff, 95 U. S. 732, 24 L. Ed. 565. Hence the federal court sitting in South Carolina should, on collateral attack, examine the question of the jurisdiction of a South Carolina state court which rendered a judgment relied on in such federal court. That there is a right of collateral attack for want of jurisdiction on a judgment of a court of another sovereignty is the rule prevailing in the majority of the states, not excepting South Carolina. McCreery v. Davis, 44 S. C. 195, 22 S. E. 178, 28 L. R. A. 655, 51 Am. St. Rep. 794; 2 Black on Judgments (2d Ed.) § 897; 12 Am. & Eng. Ency. (1st Ed.) 148 et seq. And beyond question this is the rule laid down by the Supreme Court of the United States, which we are required to follow. Thompson v. Whitman, 18 Wall. 457, 21

Digitized by Google

L. Ed. 897; Simmons v. Saul, 138 U. S. 448, 11 Sup. Ct. 369, 34 L. Ed. 1054; Guaranty Co. v. Railroad Co., 139 U. S. 147, 11 Sup. Ct. 512, 35 L. Ed. 116, and cases therein cited.

If the above-mentioned decisions in Petigru v. Ferguson, Ex parte Crafts, etc., could be considered as decisions of a matter of local law, we should be bound to follow them. But the right of collateral attack on a judgment for want of jurisdiction is a question of general law. The plaintiff in error is relying on a common-law right. Galpin v. Page, 3 Sawy. 93, Fed. Cas. No. 5,206; Chicago v. Robbins, 2 Black, 419, 17 L. Ed. 298; Olcott v. Supervisors, 16 Wall. 689, 21 L. Ed. 382.

Again, if the South Carolina decisions above mentioned could be considered as construing the statute law of that state, we should be bound by them. But they were not so intended. They merely lay down the rule of common law prevailing in the South Carolina state courts, where it is proposed to collaterally attack in such courts a first grant of letters of administration made by a South Carolina probate court. So far as we are advised, the Supreme Court of South Carolina has never construed section 48 of the Code of Civil Procedure in respect to the question here made. It follows that we must now construe that statute.

In the opinion of the learned trial court it is said:

> "In the case at bar the probate court of Spartanburg county was the first court which had taken cognizance of the settlement of the estate of Castleberry. It first issued the letters granting plaintiff title, and when the Richland court acted there was nothing to act on. The petitions were ex parte. They decided nothing. The effective action was the grant."

The language of section 48 is peculiar. If it had declared that the court in which the petition is first filed, or which first issued citation, should have exclusive jurisdiction, we should have a different question. But the language is "the court which first takes cognizance of the settlement of the estate." Section 40 of the Code of Civil Procedure reads:

> "All proceedings in relation to the settlement of the estate of any person deceased shall be had in the probate court of the county in which his will was proved, or administration of estate was granted."

Apparently the theory of the Legislature was that the grant of letters is the first action of a court which may be considered as "taking cognizance of the settlement" of an estate. The filing of the petition is ex parte. The issue of citation is a ministerial act in essence, made obligatory by section 2027 of the Revised Statutes, and does not involve the exercise of discretion, or any strictly judicial action. The first judicial act of the probate court is the grant of letters of administration. Such action is beyond doubt taking cognizance of the settlement of the estate. And it is the first act that can be properly so considered. We are of opinion that the jurisdiction of the Spartanburg court was not defeated by the subsequent grant of letters by the Richland court. It follows that the grant by the Richland court was made without jurisdiction, and was void ab initio. The plaintiff below, therefore, had title as administrator at the institution of this action.

Finding no error so far in the rulings of the trial court, we must now

Digitized by Google

state the facts on which are based the remaining assignments of error. The Phœnix Bridge Company, a Pennsylvania corporation, had undertaken to make certain repairs of a railroad bridge over the Congaree river in South Carolina. The business of the company is divided into two departments, and this work belonged to the "erection department." Neither the superintendent nor the assistant superintendent of this department left the home office. The work in question was in immediate charge of one Simmons, who was the foreman. Castleberry was a workman employed by and under the direction of Simmons. The repairs to be made consisted in part in replacing certain old parts of the bridge with heavy steel girders. In order to do this, it was first necessary to erect certain wooden frames or bents to sustain the weight of the steel girders while being put in place. These wooden frames had been made on the spot by the bridge force under the direction of Simmons, and had been on the Friday preceding the accident, which occurred on Monday, August 26, 1901, put in place and held there by guy ropes. On the following day heavy rain prevented work. The next day (Sunday) was clear and warm. On Monday Simmons ordered Castleberry to take up the old track under the steel girders, which were suspended above him, and which were sustained by the wooden frames. While in this situation the frames gave way and toppled over, and the girders fell and killed Castleberry. There was evidence tending to show that under the girders was not a safe place to work, in the absence of cribs to support the girders and take the strain off the wooden frames, and that cribs were not on this occasion used. Also that the frames had not been constructed according to the plans furnished by the defendant company, and that they were unsafe. Also that the frames were not properly guyed. There was also evidence that the rain on the Saturday preceding the accident, which contracted the guy ropes, and the heat of the sun on Sunday, which loosened the ropes, had disturbed the placing of the frames, and that on Monday no inspection of the condition of the frames was made, the guy ropes were not tightened and the frames were not plumbed. There was evidence introduced by the defendant below tending to contradict the evidence of the plaintiff below. The remaining assignments of error are to certain parts of the charge given by the trial judge and to his refusal to give certain instructions requested by the defendant below. It is unnecessary to state in detail these assignments. The instructions given the jury were based on the theory that the defendant was liable for want of ordinary care in furnishing safe and proper instrumentalities for carrying on the work, or for want of ordinary care in inspecting the condition of such instrumentalities. Counsel for the defendant below excepted to the parts of the charge covering these points, and also to the refusal of the court to give certain instructions based on the theory that Simmons and Castleberry were fellow servants. It was evidently the plan of work that the new steel girders should be temporarily suspended, or otherwise supported, above their final resting place, and that thereafter the workmen must, going under the steel girders thus supported, remove some of the old parts of the bridge.

It is the established rule of the federal courts that a mere foreman—not the head of a separate department—is a fellow servant of the work-

Digitized by Google

men under him, or a vice principal, dependent on the nature of the duties such foreman is discharging at the time of the negligent act with which he is charged. If he is discharging one of the absolute or personal duties of the master, he is a vice principal, and his negligence is imputable to the master. Baltimore & Ohio R. Co. v. Baugh, 149 U. S. 368, 13 Sup. Ct. 914, 37 L. Ed. 772; Northern Pac. R. Co. v. Hambly, 154 U. S. 349, 14 Sup. Ct. 983, 38 L. Ed. 1009; Central R. Co. v. Keegan, 160 U. S. 259, 16 Sup. Ct. 269, 40 L. Ed. 418; Northern Pac. R. Co. v. Peterson, 162 U. S. 346, 16 Sup. Ct. 843, 40 L. Ed. 994; Northern Pac. R. Co. v. Charless, 162 U. S. 359, 16 Sup. Ct. 848, 40 L. Ed. 999; Martin v. Atchison R. Co., 166 U. S. 399, 17 Sup. Ct. 603, 41 L. Ed. 1051; Alaska Min. Co. v. Whelan, 168 U. S. 86, 18 Sup. Ct. 40, 42 L. Ed. 390; 12 Am. & Eng. Ency. (2d Ed.) p. 933. The injury to Castleberry was caused either by the insufficiency of the supports for temporarily holding the steel girders, or because of a want of proper inspection of their condition. In cases such as we have here—where the injury results from the use of some device or appliance intended for temporary use—it is frequently difficult to determine whether the rights of the parties are to be determined by reference to the duty of the master in respect to providing a safe place in which to work or to the master's duties in respect to appliances and instrumentalities for carrying on the work. Under the circumstances of this case we think that the rule as to providing a safe place is inapplicable. In Thomas on Negligence, at page 790, it is said:

> "A staging or scaffolding for workmen is not a place in which work is to be done, within the rule requiring the master to furnish his servants a suitable and safe place in which to work, but it is an appliance or instrumentality by the means of which the work is to be done."

See, also, 20 Am. & Eng. Ency. (2d Ed.) p. 81, note 7, where it is said, citing Butler v. Townsend, 126 N. Y. 105, 26 N. E. 1017; Whallon v. Sprague Co., 1 App. Div. 264, 37 N. Y. Supp. 174; Stewart v. Ferguson, 34 App. Div. 515, 54 N. Y. Supp. 615:

> "Under these decisions, what is temporary must be considered as an 'appliance,' and only what is permanent as a 'place.'"

It has frequently been said that it is one of the absolute and personal duties of the master to furnish reasonably safe and suitable appliances. This statement cannot be considered as universally true. We think a better statement of the rule is as follows: When, by the express or implied contract between the master and his servant, the former undertakes to furnish the necessary tools or appliances, it is the master's duty to use ordinary care to see to it that such instrumentalities are safe and suitable. And as this duty, when it exists, is one of the absolute or personal duties, any servant to whom the master delegates it is pro hac vice a vice principal, for whose negligence the master is liable. It frequently happens that by the express or implied contract the master undertakes merely to furnish the materials needed for the construction of some appliance, and that the workmen themselves, as incident to the main work, construct the appliance. In many such cases it has been said that the master's duty is performed if he furnishes suitable material and competent workmen. In 20 Am. & Eng. Ency. (2d Ed.) at page 82, it is said:

Digitized by Google

"Where the servant, as a part of his work, is to construct a scaffold or other structure out of materials furnished by the employer, and the employer furnishes proper materials for that purpose, but the servant, by negligence either in putting the materials together or in selecting them, erects an unsafe appliance, which results in injury to another servant, no negligence can be imputed to the master, and he is not liable for the injury. In such cases the master's responsibility ends with the selection of suitable material and suitable men for the work."

Again, in 12 Am. & Eng. Ency. (2d Ed.) p. 956, it is said:

"But where the duty of erecting the necessary scaffold or staging is devolved upon workmen as a part of or as incident to the work which they are to perform, they are all fellow servants, and the master is not liable to one of them for the negligence of his fellow workman in the construction of the scaffold. * * *"

The numerous cases referred to in the Encyclopædia have been examined, and we find them to fully warrant and support the above-quoted statements. It is true that in the majority of the cases cited in support of this rule the defective structure was a simple scaffold or staging. But we are unable to find any line of demarcation between such cases and the case at bar. Here the frames for the support of the steel girders were constructed on the spot by the bridge force as a part of the work. The construction of these frames was merely a detail of the work. The duty performed by Simmons in directing the construction of the frames or bents did not differ from that performed by him in regard to the other details of the work. If these frames had been constructed elsewhere, and furnished as a completed instrumentality, a different rule would apply. As the employer here only undertook to furnish the materials and the plan, and as the bridge force was to construct the supports, we are constrained to hold that in such construction Simmons was not a vice principal. If his negligence in constructing insufficient supports caused the injury, it was the negligence of a fellow servant, for which the employer is not liable.

In the case at bar it is clear that the duty of furnishing proper materials for constructing the device needed to temporarily support the steel girders rested on the master. There was evidence in this case tending to show that the frames were not sufficient without cribs or blocks, and that cribs were not used. But there was no evidence that such cribs were not furnished. So far as the record shows, the necessary blocks may have been furnished, and the failure to use them may have been simply the result of negligence on the part of Simmons, the foreman. The burden of proving negligence rested on the plaintiff, and, in the absence of affirmative evidence that the defendant failed to furnish the blocks, there could not properly have been a verdict for the plaintiff on this ground.

There was evidence, also, tending to show that the injury may have been caused by want of proper inspection of the condition of the frames and guy ropes. If the duty of inspection in this respect rested on the master, Simmons, the foreman, was, as to such duty, a vice principal. But we fail to find a sufficient reason for holding that the master was here charged with the duty of inspection. Where the master furnishes an appliance, he is charged with the duty of inspecting its condition. But where, as here, the construction of the appliance devolved on the workmen, there was no more reason for requiring inspection of its

Digitized by Google

condition than of requiring inspection of any other part of the work. So far as we have found, whenever the authorities discuss the duty of the master in respect to inspection, it is in regard to the safety of the place of work or the condition of appliances and instrumentalities furnished by the master.

The charge given the jury was based on the theory that the defendant had undertaken to furnish the appliances needed for the temporary support of the girders, and that a want of ordinary care in constructing or inspecting such appliances made the defendant liable. From what we have said it follows that we are of opinion that the charge was erroneous. We must, therefore, reverse the judgment of the trial court and remand the cause for proceedings not inconsistent with this opinion.

Reversed.

(131 Fed. 182.)

ELLIS v. INMAN, POULSEN & CO. et al.

(Circuit Court of Appeals, Ninth Circuit. June 6, 1904.)

No. 1,000.

1. MONOPOLIES—ANTI-TRUST LAW—COMBINATION IN RESTRAINT OF INTERSTATE COMMERCE.

In determining whether or not a combination is in violation of the federal anti-trust law, as in restraint of interstate commerce, it is immaterial that such is not its ultimate object, which is in most cases to increase the trade and profits of the parties to such combination; nor is it material to ascertain what proportion the resulting restraint of interstate commerce bears to other results. The true inquiry is whether it tends directly to appreciably restrain interstate trade, and, if it does, it is within the statute, although such effect may not be so considerable as its other effects.

2. SAME.

A complaint alleged that plaintiff was a builder doing business in Portland, Or.; that in such business he purchased large quantities of rough lumber from mills located at Vancouver, Wash., which was seven miles from Portland, but that such mills did not manufacture finished or kiln-dried lumber; that defendants, who comprised all the manufacturers and dealers in Portland, combined to fix exorbitant prices on all lumber sold by them, and to compel all consumers in Portland to pay such prices by refusing to sell any finished lumber at any price to such consumers as bought lumber of any kind from other dealers, except on condition that such consumer pays to defendants the difference between the price he paid for lumber so bought from others and the price charged therefor by defendants and promises to buy all his lumber thereafter from defendants; that the purpose and effect of such combination was to prevent plaintiff and other consumers from buying lumber at Washington mills, and to obtain a monopoly of the trade in Portland at unreasonable and exorbitant prices. *Held*, that the combination charged constituted a violation of the federal anti-trust act, its effect being to directly restrain interstate commerce, and that the complaint stated a cause of action thereunder for the recovery of damages alleged to have resulted to plaintiff.

In Error to the Circuit Court of the United States for the District of Oregon.

For opinion below, see 124 Fed. 956.

Digitized by Google

The plaintiff in error brought an action against the defendants in error under the provisions of the act of Congress of July 2, 1890, c. 647, 26 Stat. 209 [U. S. Comp. St. 1901, p. 3200], entitled "An act to protect trade and commerce against unlawful restraints and monopolies," to recover damages resulting from a combination of the defendants in error to prevent him from purchasing lumber in the city of Vancouver, Wash., to be used in the city of Portland, Or. The substantial averments of the complaint are as follows: That the plaintiff in error is engaged in the business of constructing houses and other buildings in the city of Portland and selling the same for profit, and in the business of constructing such buildings on contracts with his customers; that the defendants in error are engaged in the business of manufacturing and selling both rough lumber and seasoned or kiln-dried lumber at Portland, Or., and that they are the only manufacturers of such lumber in or adjacent to said city who sell lumber therein; that there are persons engaged in the business of manufacturing and selling rough lumber at the city of Vancouver and at other points in the state of Washington, and that, until interfered with by the acts and combination of the defendants in error, the plaintiff in error could and did purchase at and import from the city of Vancouver large quantities of lumber for use in his business at Portland; that, in order to carry on his said business, it is necessary for him to purchase and use large quantities both of rough lumber and of seasoned or kiln-dried lumber; that the mills at Vancouver produce only rough lumber, and that the seasoned or kiln-dried lumber required by the plaintiff in his business can only be procured from the defendants in error, and he is absolutely dependent upon them for his supply thereof; that on July 2, 1902, the other defendants in error organized the defendant City Retail Lumber Company, and for the purpose and with the intent of creating a monopoly of the manufacture and sale of lumber for local use in the markets of the city of Portland, and of controlling and restricting the output of lumber from defendants' said mills, and fixing and controlling the price of lumber in said Portland market, and arbitrarily advancing said price and demanding and receiving excessive and unreasonable prices for the lumber manufactured and sold by them, and preventing the shipment of lumber by the said manufacturers in the state of Washington from said state to the city of Portland, and preventing the sale in the city of Portland of lumber manufactured in the state of Washington, and preventing the plaintiff in error and all other contractors and builders in Portland from purchasing lumber from any dealers other than the defendants, and particularly from said manufacturers in the state of Washington, did conspire, confederate, and agree together that they would sell lumber in the Portland market only through said City Retail Lumber Company at prices to be fixed by it and to persons to be designated and approved by it; that thereafter the entire sales of lumber in the Portland market from all the defendants in error were placed in the control of said City Retail Lumber Company for the purpose and with the intent of preventing the plaintiff in error and other contractors and builders in Portland from purchasing lumber from said manufacturers in the state of Washington, and that the defendants in error further conspired and agreed to adopt such means and prescribe and enforce such burdens and penalties as might be necessary to carry out said purpose, and thereby enable them to fix a price on lumber in the city of Portland, and control the output and sales of lumber therein; that to carry out said purposes the defendants in error have employed agents to watch the construction of all buildings in the city of Portland, and ascertain the sources from which lumber used therein is procured, and to report to the City Retail Lumber Company all buildings for the construction of which any lumber was procured from said manufacturers in the state of Washington, and that upon such report the defendants in error would refuse to supply any lumber upon any terms to such contractor, builder, or other consumer who purchased any lumber for use in Portland from said manufacturers in the state of Washington, and have refused to sell any lumber to such contractor, builder, or other consumer, except upon the condition that he pay them, in addition to the price charged by them for lumber required from them, the difference between the price he paid for the lumber so purchased in the state of Washington and the price then charged by them

Digitized by Google

for the same quantity of similar lumber, and the further condition that he promise them to purchase no more lumber from said manufacturers in the state of Washington, and that in all cases where the contractor, builder, or other consumer had procured a sufficient supply of rough lumber from manufacturers other than the defendants in error, and bought from manufacturers in the state of Washington, the defendants in error have refused to sell any finished, seasoned, or kiln-dried lumber to such contractor, builder, or other consumer, except upon his making such payment and such promise; that by these means the defendants in error have compelled all contractors and builders in Portland to cease buying lumber from the mills in the state of Washington, and have been enabled to and do control the output of lumber sold in the market in Portland, and have fixed extortionate prices therefor; that in March, 1903, in the course of his business, the plaintiff in error purchased from a manufacturer in Vancouver, Wash., and had shipped to and delivered to him at Portland, a large quantity of rough lumber at a price of $250 less than was then charged by the defendants in error for the same quantity of like lumber in Portland, and the plaintiff used the same in the construction of buildings; that on March 20, 1903, he required for use in the construction of said buildings large quantities of finished and seasoned or kiln-dried lumber, and was and has been unable to procure the same from any manufacturer or dealer other than the defendants in error, and that on or about that date he applied to the defendants in error to purchase such lumber, to wit, about 7,000 feet of flooring, about 7,000 feet of ceiling, and about 9,000 feet of rustic, which lumber was so needed by him in his business, and offered to pay them therefor the regular price charged by them for the same, but that because of his purchase of lumber at Vancouver, Wash., the defendants in error refused to sell him said or any lumber upon any terms, and so refused for a period of two months, and still refuse, unless the plaintiff in error pay them, in addition to the prices charged by them for the lumber which he wished to purchase from them, the sum of $250, the difference between the price he paid for lumber in Vancouver and the price they charged for the same quantity and quality at Portland, and unless, in addition thereto, he promise them in the future to purchase no lumber from any manufacturer or dealer in the state of Washington; that the plaintiff in error refused to comply with said conditions, and was unable to procure any lumber from the defendants in error; that at all the times mentioned in the complaint the defendants in error have had on hand and for sale in the city of Portland ample supplies of lumber of the quantity and kinds that the plaintiff in error required, and during all said time the plaintiff in error has been ready and able and has offered to pay therefor the regular prices charged by the defendants in error, but they have so refused to sell the same in pursuance and furtherance of their conspiracy, and for the purposes and with the intent above stated, and for the reason that the plaintiff in error had purchased lumber from said manufacturers in the city of Vancouver, and for the purpose and with the intent of preventing him from purchasing lumber from said manufacturers in the city of Vancouver and forcing him to purchase the same from the defendants in error, and for the purpose of punishing and injuring him for having made such purchase in Vancouver, and not for any other reasons. The plaintiff in error alleged that he was damaged in the sum of $7,000 through his inability to continue his business and through loss of profit on his business during the building season of 1903, and the loss of custom and good will of his said business; in the sum of $500 through the delay caused in the construction of two certain buildings and from being compelled to use unseasoned and inferior lumber in their construction; in the sum of $1,000, caused by delay in the construction of a certain building which he had contracted to build for the price of $4,000, and by the exposure of said building to the rains, and by being required to use unseasoned and inferior lumber in finishing the same, and by being unable to secure payment on his contract on that account; in the sum of $25 through being compelled by reason of said combination to purchase in the month of April, 1903, rough lumber from them at their own price, which was $25 in excess of the cost of the same lumber if purchased in Vancouver and shipped therefrom to Portland. The defendants in error filed demurrers to the complaint on the ground

Digitized by Google

that it did not state facts sufficient to constitute a cause of action. The demurrers were sustained, and the complaint was dismissed, with costs to the defendants in error. To review that judgment the plaintiff in error has sued out this writ of error.

Veazie & Freeman, for plaintiff in error.

Cake & Cake, for defendants in error Inman, Poulsen & Co.

Wm. D. Fenton, for remaining defendants in error.

Before GILBERT and ROSS, Circuit Judges, and HAWLEY, District Judge.

GILBERT, Circuit Judge, after stating the case as above, delivered the opinion of the court.

The question presented is whether the complaint states a cause of action. It alleges that an interstate trade in lumber had existed between purchasers in the city of Portland, in the state of Oregon, and manufacturers at Vancouver, in the state of Washington, about seven miles distant from Portland, and that the defendants in error, who constitute all the manufacturers of lumber in the city of Portland, formed a combination for the purpose of preventing the importation of lumber from the state of Washington for use in Portland, and that they adopted means such as to accomplish their purpose. It is contended by the defendants in error: First. That the combination does not operate directly upon the manufacture, sale, or transportation of an article of interstate commerce; that it only incidentally and collaterally relates to or affects the sale and transportation of lumber from another state, and that it is therefore not within the prohibition of the act. Second. That the injury complained of by the plaintiff in error was not the direct or unavoidable result of an illegal combination, but that such injury, if any, resulted from the refusal of the defendants in error to deal with the plaintiff in error except upon terms acceptable to them. The interpretation of the statute applicable to the case is found in Anderson v. United States, 171 U. S. 615, 19 Sup. Ct. 54, 43 L. Ed. 300, in which it was said:

"Where the subject-matter of the agreement does not directly relate to and act upon and embrace interstate commerce, and where the undisputed facts clearly show that the purpose of the agreement was not to regulate, obstruct, or restrain that commerce, but that it was entered into with the object of properly and fairly regulating the transaction of the business in which the parties to the agreement were engaged, such agreement will be upheld as not within the statute, where it can be seen that the character and terms of the agreement are well calculated to attain the purpose for which it was formed, and where the effect of its formation and enforcement upon interstate trade or commerce is in any event but indirect and incidental, and not its purpose or object. * * * If an agreement of that nature, while apt and proper for the purpose thus intended, should possibly, though only indirectly and unintentionally, affect interstate trade or commerce, in that event we think the agreement would be good; otherwise there is scarcely any agreement among men which has interstate or foreign commerce for its subject that may not remotely be said to in some obscure way affect that commerce, and to be therefore void."

Also, in United States v. Joint Traffic Association, 171 U. S. 568, 19 Sup. Ct. 31, 43 L. Ed. 259, where it was said:

"The effect upon interstate commerce must not be indirect or incidental only. An agreement entered into for the purpose of promoting the legitimate

Digitized by Google

business of an individual or corporation, with no purpose to thereby affect or restrain interstate commerce, and which does not directly restrain such commerce, is not, as we think, covered by the act, although the agreement may indirectly and remotely affect that commerce."

Does the combination which is set forth in the complaint in the present case tend directly to restrain interstate commerce? The complaint alleges that such was its purpose, and that such is its effect. Notwithstanding these allegations, however, it is clear that, if it can be seen from the facts set forth that the restraint is only indirect and incidental, no cause of action is stated within the intendment of the act. But it is equally clear that the distinct allegation of the purpose of such a combination may be taken into consideration in connection with the facts alleged. If it be true that the purpose of the defendants in error was as alleged, how can it be said of any means which they adopt to effectuate the purpose that they accomplish it only indirectly and incidentally? It is true that the complaint alleges the existence of another purpose—the purpose to obtain excessive and unreasonable prices for lumber; but one of the purposes alleged in attaining that end is the purpose of shutting off the Portland trade in Washington lumber. In determining whether or not the restraint of trade is the direct and necessary result of the combination, no assistance is to be found by pursuing the inquiry further and ascertaining whether its main purpose and chief effect are to foster the trade and increase the business of those engaged in it. It may be conceded that the main purpose of all such combinations is to foster the trade and increase the profits of those who are engaged in them, that the restraint of interstate trade as such is not their ultimate object, and that the effect of the combination on interstate trade is to the members of the combination an immaterial matter. Nor is it material, we think, to inquire what is the chief effect of the combination? The true inquiry is, does it tend directly to appreciably restrain interstate commerce? It is not material to ascertain just what proportion the resulting restraint of interstate commerce bears to other effects or results of the combination. Nor is the court called upon to weigh the effects, or to determine that, if the effect in restraining interstate trade is not so considerable as other effects, the combination is not forbidden. In the case of W. W. Montague & Co. v. Lowry et al., 24 Sup. Ct. 307, 48 L. Ed. 608, in which the Supreme Court very recently affirmed the judgment of this court, a combination was made between certain dealers of tiles, mantels, and grates in the cities of San Francisco, Sacramento, and San José, who were members of an association formed for the purposes of the combination, and all of the manufacturers of such articles in the other states of the Union. By the terms of the agreement the manufacturers bound themselves not to sell goods in San Francisco, or within a radius of 200 miles therefrom, to any one who was not a member of the association. There was no manufacturer of such goods in California. The plaintiffs who brought the action were dealers in tiles, but not members of the association They were unable to purchase goods of the manufacturers. The only restraint on trade was that which resulted from the inability of the plaintiffs to buy goods on equal terms with members of the association for use at their place of business in San Francisco. It could not be

Digitized by Google

demonstrated in that case that by reason of the agreement the total amount of interstate trade would be at all diminished. But the Supreme Court held that it was sufficient if it could be seen that the tendency of the combination was such as to diminish such interstate trade. Said the court, "The amount of trade in the commodity is not very material."

The defendants in error admit that the business of importing lumber from the state of Washington into the city of Portland may be affected by the combination; but they say that the result is due, not to their combination to refuse to sell to purchasers in the city of Portland who make such importations, but to the inability of the Washington mills to supply the Portland market with kiln-dried or finishing lumber; and that the combination is not the direct and proximate cause of the inability of the Washington mills to sell lumber in the city of Portland. But that very inability is one of the essential facts which aid to create the situation which is complained of. It is a fact conceded to exist, and it is taken advantage of by the defendants in error. But for the existence of that fact, it is safe to assert that the combination would not have been formed. The facts must be reckoned with as they are found. Can it be said that the absence of factories and plants outside of the combination capable of producing finishing lumber so as to compete with the defendants in error shall relieve them from responsibility for their acts? Does the fact that the whole combination and its success are made possible by the adventitious circumstance that no one has yet seen fit to invest the capital necessary to establish a competing plant at Vancouver render the restraint of interstate commerce effected by the combination any the less direct and necessary? If such is the law, it follows that, to secure immunity for every such combination, it is necessary only to bring into it all manufacturers of its line of goods, and to intrench it behind the proposition that the resulting restraint of trade comes, not from the combination, but from the inability of others to supply the market. The mere statement of the proposition is its refutation. With equal reason it might have been urged in the Montague Case that the restraint of interstate trade was owing, not to the combination, but to the fact that there was no independent manufacturer of tiles from whom the plaintiffs in that case could purchase.

The opinion of the trial court in sustaining the demurrers seems to have been largely influenced by the argument that if the defendants in error, instead of combining to advance prices and to refuse to sell to certain purchasers, had combined to reduce the prices of all kinds of lumber to all purchasers, it would have had an equal tendency to destroy the trade in lumber between Vancouver and Portland, and yet in so doing the defendants in error could not have been accused of acting unlawfully in restraint of that trade. But is this argument sound, and does it lead to the conclusion which was reached by the court? We submit that a combination which is made for the specific purpose of restraining interstate trade and which accomplishes that purpose, restrains it directly, and that, if such be its intention and its direct tendency, it is under the ban of the act, whether it include an agreement to raise prices or an agreement to lower them. The mere agreement to raise or lower prices, as was said by the court in the E. C. Knight Case, 156 U. S. 16,

Digitized by Google

15 Sup. Ct. 255, 39 L. Ed. 325, might tend to restrain external trade, "but the restraint would be an indirect result, however inevitable and whatever its extent; and such result would not necessarily determine the object of the contract, combination, or conspiracy." But this is far from saying that a combination to raise or lower prices aimed directly at the destruction of a particular branch of interstate trade would accomplish that result indirectly, and therefore lawfully. In United States v. Freight Association, 166 U. S. 328, 17 Sup. Ct. 554, 41 L. Ed. 1007, the court, referring to the terms of the act, said:

> "The plain and ordinary meaning of such language is not limited to that kind of contract alone which is in unreasonable restraint of trade, but all contracts are included in such language, and no exception or limitation can be added without placing in the act that which has been omitted by Congress."

The same view was reaffirmed in United States v. Joint Traffic Association, 171 U. S. 558, 19 Sup. Ct. 25, 43 L. Ed. 259. In United States v. Swift & Co. (C. C.) 122 Fed. 534, Judge Grosscup, referring to the doctrine of the two cases just cited, well said:

> "It is clear from them that restraint of trade is not dependent upon any consideration of reasonableness or unreasonableness in the combination averred; nor is it to be tested by the prices that result from the combination. Indeed, combination that leads directly to lower prices to the consumer may, within the doctrine of these cases, even as against the consumer, be restraint of trade; and combination that leads directly to higher prices may, as against the producer, be restraint of trade. The statute, thus interpreted, has no concern with prices, but looks solely to competition, and to the giving of competition full play, by making illegal any effort at restriction upon competition."

From the recent case of Northern Securities Co. v. United States, 193 U. S. 197, 24 Sup. Ct. 436, 48 L. Ed. 679, it would appear that when the questions involved in the opinions of the Supreme Court in the two cases last above quoted shall again come before that court for consideration the majority of the members of the court may hold that the rulings in those cases should have gone no further than to decide that the contracts there presented were unreasonable restraint of interstate trade, and were, as such, within the scope of the act. But if we adopt that view of the law, and assume that the purpose of the act was to place a statutory prohibition only on those combinations which are unreasonable and against public policy, as well as in direct restraint of interstate trade, the present combination, as it is set forth in the complaint, clearly comes within the prohibition. The complaint alleges that the prices placed upon all lumber by the defendants in error are excessive and unreasonable, and that for unfinished lumber their price is double the price of Vancouver lumber of the same kind. The combination, as it is stated in the complaint, is more than a mere agreement to raise prices. It includes also an agreement to coerce purchasers of lumber by other means, and to compel them to desist from the interstate trade. Taking together all the allegations of the complaint, it appears that an active trade in lumber between the Vancouver mills and the Portland consumers of lumber has been restrained by the acts of the defendants in error. By combining as they did they wielded a power that no individual action could possess. They possessed the power to

Digitized by Google

ruin the business of any Portland contractor who imported lumber from the adjoining state, and they exercised that power. Restraint of the trade resulted therefrom, and the restraint was the direct and necessary result of a combination made to carry out that specific purpose. If the allegations of the complaint be true, the defendants in error have violated the prohibition of the act, and are answerable to the plaintiff in error in damages.

The judgment of the Circuit Court is reversed, and the cause remanded for further proceedings not inconsistent with these views.

(131 Fed. 189.)

THE KING GRUFFYDD.

(Circuit Court of Appeals, Second Circuit. April 6, 1904.)

No. 160.

1. SHIPPING — INJURIES TO STEVEDORE — APPLIANCES — SELECTION — FELLOW SERVANTS.

Where a stevedore was injured during the raising of a skid weighing something more than a ton from a lighter, by the breaking of a wire cable known as a "topping lift," and it appeared that such lifts, when in apparent good condition, as was the one in question when selected, were capable of lifting 20 tons, the servant who selected such lift was not guilty of negligence in selecting it, instead of selecting a chain span, which was used for heavier loads.

2. SAME—APPLIANCES—INSPECTION.

A stevedore was injured by the breaking of a topping lift furnished by the vessel for use in raising a skid from a lighter. Such appliance consisted of a wire cable bent round a concave ring and spliced; the splicing being served with spun yarn, wrapped with bagging and saturated with oil. The appliance in question, instead of being carefully stowed between voyages, had been permitted to remain on deck, exposed to the weather, during several voyages to West India ports, which tended greatly to shorten the period within which it could be safely used. *Held*, that the master of the ship was guilty of negligence in permitting such lift to be used after a mere external inspection, without a periodic examination of the splice, and a renewal of the oiled service intended to protect it.

Appeal from the District Court of the United States for the Eastern District of New York.

This cause comes here upon appeal from a decree of the District Court, Eastern District of New York, in favor of libelant, for personal injuries sustained by him in an accident on the steamship King Gruffydd, on which he was working as a stevedore.

J. Parker Kirlin, for appellant.

Alfred C. Cowan, for appellee.

Before WALLACE, LACOMBE, and COXE, Circuit Judges.

LACOMBE, Circuit Judge. At the time of the accident the port boom at No. 1 hatch had been rigged, and the stevedore's men were about to raise a heavy skid from a lighter, so as to bring one end of it to the rail of the ship, to facilitate discharge of cargo into the lighter. The boom was held up by a wire cable known as a "topping lift," which extended from the end of the boom to a block on the mast, and thence to

Digitized by Google

the deck. The fall from the end of the boom was hooked into the skid, and while it was being hoisted by the winch the topping lift broke close to the eye, which was fastened to the boom, and the latter fell upon the plaintiff. There is much dispute in the evidence as to how far up the skid had been lifted, and whether it had been kept free of the vessel; but the District Judge, who heard and saw all the libelant's witnesses, and all but two of the claimant's, finds it was raised till it caught on the side of the vessel, and we see no reason to dissent therefrom. There is no other finding of fact in the opinion, which is only five lines in length, and does not indicate the theory upon which defendant was held liable. We have reached a like result upon independent conclusions as to the truth of the testimony, which is very conflicting. We are satisfied that the boom was rigged up for service by the stevedores, not by the ship; that an ample supply of gear and tackle for such rigging was furnished by the ship, but that its officers did not indicate which should be used, the selection being left to the stevedore's men. We are not satisfied that the libelant at any time before the accident called the attention of the mate or boatswain to the topping lift, saying "it was rusty and didn't look very strong." The libelant testified on direct, cross, and redirect without any suggestion of his having made any such complaint. Subsequently one of his fellow workmen testified that he heard him say so; volunteering the statement, which was not responsive to any question. Thereupon the libelant was recalled, and told the same story. The importance of such evidence must have been so obvious, even to an ignorant man, that it is difficult to understand how the case could have been prepared for trial without any suggestion of it being made to libelant's counsel. Apparently none such was made, since he made no effort to elicit it from the plaintiff. Moreover, the libelant and his witness both testify that the statement to the mate or boatswain was made before anything had been done by them in the way of rigging, and while the end of the boom was hoisted up—it came to within 10 or 15 feet of the mast—and that they were looking up at it. It must have been considerably more than 15 feet above their heads, and, since the wire cable was only about 1 inch in diameter, the statement that plaintiff at that time noticed rust spots on it, and signs of weakness in it, is so extremely improbable, that, in view of the positive denials by both mate and boatswain, we must discredit it.

The claimant contends that the negligence which caused the accident was that of libelant's fellow servant, to wit, the particular stevedore who made selection of a wire-cable topping lift to support the boom, instead of a chain (technically called a "chain span"), which was available, and equally at his service, and would undoubtedly have withstood all strains. Much evidence has been introduced showing that when the ship's crew were working the derricks, in foreign ports, they used wire topping lifts only for light loads, not over a ton in weight, and the chain spans for heavier ones. But the question is not what the ship's crew did, but what a reasonably prudent man would have done when making the selection. The stevedores were about to discharge pig lead, 100 pounds to the pig; 15 to 20 pigs to a sling or single load. The skid weighed somewhat more than a ton—possibly a ton and a half. It might be anticipated that the skid would catch on some projection.

Digitized by Google

Indeed, such a contingency was taken into consideration, for the stevedores had men hauling on the skid to prevent it from contacting with the ship's side. In the event of its catching on some projection, the load would be increased, possibly up to the limit of the lifting capacity of the winch. The captain testified that such capacity was 3 tons. We are satisfied that, except in the place where it broke, which had been "served," as will be hereafter explained, and was therefore covered from view, there was nothing about the topping lift to indicate that its tensile strength was not normal. The selection made by the stevedores, therefore, was between a chain and a wire rope, both apparently in good order; and the only question is, would a reasonably prudent man have rejected the wire when about to rig the boom for regular sling loads of 1 ton, with the possibility of exposure to strains up to 3 tons? The testimony introduced by libelant is to the effect that a normal wire cable of that size would have held more strain than the engine could have pulled on it, while a witness called by claimant testified that a cable of that size in good condition will lift easily 20 tons. In view of this evidence, it cannot be held that there was any negligence in the selection of the topping lift instead of the chain.

The claimant contends that the defect was latent, and that there was no negligence in examination, nor in failure to anticipate and provide for such defect. The topping lift is a section of wire cable, at each extremity of which an eye has been inserted by bending the cable around a metal ring concave on its outer periphery, and splicing the end into the cable just above the ring. This splice necessarily breaks up the structure of the cable, and leaves a place more exposed than the rest of it is to the entrance and retention of water, and to the corrosive action of rust. In order to guard against this, the splice is "served"; that is, bagging saturated with oil is wrapped around the splice, and then spun yard is put over that—"served" over with a mallet. The service covered the place where the break in this wire rope occurred, and the defect which caused the break apparently could not have been discovered without removing the service. The captain testified that gear of this kind ought to be examined every time they are taken down and put up, but, under the authorities there was no obligation to take the structure apart on each of these examinations. The Olympia, 61 Fed. 120, 9 C. C. A. 393; Killman v. Robert Palmer & Son Shipbuilding & Marine Ry. Co., 102 Fed. 224, 42 C. C. A. 281. In the absence of anything which challenged attention, and under normal conditions of use, the claimant was entitled to rely upon a certain period of life in the structures it used. The captain testified that the life of a wire topping lift "depends on the use it is put to—sometimes it will last 3 and 4 and 5 years"—and that this particular one had been in use not more than 18 months. If it had been used in the ordinary way, there would be much force in the contention that the testimony failed to show any negligence on the part of the ship or those in charge of her. Such topping lifts are commonly and ordinarily used when in port for loading and discharging cargo—not always in every port, because sometimes when heavier loads are being moved the chain spans are used. While they are thus in use in port they are exposed to the weather, but that time occupies a comparatively small part of the ship's period of activity.

Digitized by Google

When cargo handling is completed and a voyage begins, the topping lifts are taken down and stowed either in the forepeak or in the alleyway under cover in a place that is warm and dry, owing to its proximity to the boilers; and, of the "three years' life" of such a cable, by far the greater part is thus passed in a place where the effects of moisture are dissipated, or at least greatly retarded. But this particular topping lift had had a very different experience. The ship had made 14 round voyages under her last charter between New York, Philadelphia, Baltimore, and Norfolk and some 16 West India ports; the delivery and discharge of cargo being unusually frequent. The boatswain testified that on the last voyage up from Tampico the topping lift, instead of being stowed away, was hung in the rigging up against the mast; one end being shackled to the sheer pole in the rigging, and the other being shackled to the deck. This was done, as he said, in order that it might be available to lift out any cattle that might die on the voyage. The captain, moreover, testified that, during the short trips between the different West Indian ports, it was left thus on the mast—apparently to avoid the necessity of constantly putting it up and stowing it away—and that during such times it would get all the dampness that there was in the salt air and in any rain or storm that happened to be going on at the time. It is also apparent that hung in this way, with one end fast to the sheer pole far up the mast, and the other end shackled to the deck, the rain and moisture which might be deposited on its whole length would naturally trickle down, so that the lower end would be exposed to a more continued wetting than other parts of the cable. And the water thus coming from above would have a tendency to make its way under the service to the point of weakness where the splice had disintegrated the structure of the cable. The captain further admitted that this topping lift was thus left on the mast "perhaps 100 days in the year." This is a use very different from the ordinary, and those in charge of the ship were bound to know that they were exposing the topping lift to conditions which would in all probability greatly shorten its life. Reasonable prudence, under these circumstances, would seem to require, in addition to the external inspection whenever it was put up or taken down, some periodic examination of the splice, and renewal of the oiled service which was intended to protect it. In the absence of proof of any such examination, we concur in the conclusion of the District Judge that there was negligence on the part of the ship.

The decree is affirmed, with interest and costs.

(131 Fed. 192.)

BUCKINGHAM et al. v. FIRST NAT. BANK OF CHICAGO et al.

(Circuit Court of Appeals, Sixth Circuit. June 15, 1904.)

No. 1,288.

1. BANKRUPTCY—PARTNERSHIP—EVIDENCE TO ESTABLISH.

Two men for a number of years conducted a business under a partnership agreement by which each agreed to bring into the business as rapidly as practicable all money he should be able to control, and not to withdraw, without the consent of the other, more than necessary to support

Digitized by Google

his family. It was also provided that each was to have a certain interest in the business, and, to equalize the capital, interest should be allowed annually. All the capital was contributed by one, and, the business having been conducted during the later years at a loss, the other, by agreement, drew out a fixed sum per month for living expenses. *Held*, that such arrangement constituted a partnership, and that, on the bankruptcy of the concern, the capital employed in the business and the debts incurred therein were firm property and debts, and not those of the partner who furnished the capital.

2. SAME—INDIVIDUAL DEBTS—FIRM AND INDIVIDUAL ESTATES.

Holders of notes of a bankrupt partnership, also indorsed by the individual partners, may, at their election, prove the same as individual debts of one of the partners, and, under Bankr. Act July 1, 1898, c. 541, § 5f, 30 Stat. 548 [U. S. Comp. St. 1901, p. 3424], are entitled to payment in full from his estate before any part of the same is applied on firm debts, at least where there are substantial firm assets; and it is immaterial that all the capital of the partnership was also contributed by such partner.

3. SAME—INDEBTEDNESS OF PARTNER TO FIRM.

A finding by a referee, affirmed by the District Court, that a partner in a bankrupt firm was not indebted to the partnership on account of money drawn out, which was less than he was entitled to draw under the partnership agreement, *held* sustained by the evidence.

Appeal from the District Court of the United States for the Western District of Tennessee.

In Bankruptcy.

Carroll, McKellar, Bullington & Biggs, for appellants.

Turley & Turley, for appellees.

Before LURTON, SEVERENS, and RICHARDS, Circuit Judges.

RICHARDS, Circuit Judge. On October 16, 1901, Z. N. Estes and S. S. Spicer, alleging they were doing business under the firm name of Z. N. Estes & Co., filed their petition in bankruptcy, upon which an adjudication has been had. The firm had been engaged in the grocery, cotton, and commission business. In the schedules annexed to the petition were contained statements of the firm property and of the individual property of Estes, Spicer having no property. The firm assets consisted of tangible personal property (stock in trade, etc.) estimated at $17,700, and accounts receivable aggregating a very large amount. The individual property of Estes was placed at over $100,000; the largest items being his residence in Memphis, valued at $25,000, and a plantation in Tunica county, Miss., known as the "Indian Creek Farm," valued at $65,000. Among the creditors of the firm were certain banking associations, the appellees, who had bought and held $35,000 of the firm notes. These notes were drawn by Z. N. Estes & Co., payable to their order at the First National Bank of Chicago, and indorsed by them in blank. They also bore the individual indorsements of Z. N. Estes and S. S. Spicer. These notes were presented as claims against the individual property of Estes. Their allowance was resisted by the appellants (creditors of the firm only) on the ground there was no real partnership; that Spicer was only an ostensible partner, having no property or real interest in the firm; that Estes owned all the firm property, and

Digitized by Google

was in fact the firm, doing business individually under the firm name; and that therefore the firm creditors ought to share equally with the individual creditors in the individual property. The referee sustained this contention, holding that the assets of every description were the individual property of Estes, in which all creditors—firm and individual—must share pari passu. The action being certified up, the court below reversed the referee; holding that the "above-named banks, who, it appears by said certificates, are the individual creditors of said Z. N. Estes, as well as joint creditors of the firm of Z. N. Estes & Co., * * * are entitled to be paid out of the individual property * * * before any of the firm creditors can participate therein."

It is urged the court erred (1) in holding there was a partnership estate, as distinguished from an individual estate; and (2) in sustaining the claims of the appellees against the individual estate in preference to those of the so-called creditors.

1. Z. N. Estes was in business in Memphis for more than 35 years. He had many partners, but there was no break in the business. As one partner retired, another took his place. The last articles of partnership were entered into April 26, 1886, between Z. N. Estes, S. S. Spicer, and W. B. Doan. They stated at the outset:

"The said parties hereby agree to form and do form a partnership for the purpose of carrying on a wholesale grocery, cotton and commission business on the following terms."

The style of the partnership was to be Z. N. Estes & Co. The business was to begin June 1, 1886, "and continue as long as is agreeable to all parties, unless dissolved by death or mutual agreement of all parties." The parties agreed—

"To bring into the business as rapidly as practicable all moneys they may be able to control from former business connections, and to withdraw nothing from the business except such amounts as may be necessary for the support of their families unless by mutual agreement.

"To equalize the amount of all parties, interest shall be charged and allowed at the end of each business year at the rate of 8 per cent. per annum. * * * The profits and losses of the said partnership are to be divided as follows, to wit: Z. N. Estes' interest to be four-sixths, W. B. Doan, one-sixth and S. S. Spicer, one-sixth."

Doan remained in the firm four years, and withdrew by mutual agreement. Estes and Spicer continued to do business under the articles until the application in bankruptcy. The firm was held out as a partnership composed of Estes and Spicer, the stationery used in the business so representing it. Firm books were kept, containing a statement of the property owned and a record of the business done by the firm. Estes furnished the entire capital, amounting to about $165,000. Spicer never contributed any. After a few years the firm ceased to make any profits, and thereafter Spicer, by agreement with Estes, was allowed to withdraw $125 per month for the support of his family.

We are satisfied from these and other facts shown in the record that there was a partnership existing between Estes and Spicer. To constitute a partnership, it was not necessary that Spicer should contribute to the capital employed. Joint capital is not necessary. One

Digitized by Google

partner may furnish capital, and another experience in the business, and they may agree to share the profits and losses in a certain proportion. Such was this case. But there was also, in addition, an agreement by all the partners to contribute to the capital of the firm in a certain contingency. Each agreed to bring into the business as rapidly as practicable all money he might be able to control, and withdraw nothing except an amount necessary for the support of his family. To equalize the amounts thus contributed, interest was to be charged and allowed at the end of each business year at the rate of 8 per cent. per annum. If the business had proved profitable, Spicer would have had an interest in the capital as well as the profits of the firm. Although it did not prove profitable for some years before the bankruptcy proceedings were begun, there was always the chance of a turn in the tide, and therefore Spicer had an interest in the capital contributed by Estes, which could not be withdrawn without Spicer's consent. We are satisfied that the relations created by the articles of partnership were never terminated by mutual agreement between Estes and Spicer. After the business ceased to be profitable, Spicer was allowed to draw $125 monthly, but this did not operate to end the partnership and place Spicer on a salary. The allowance was to cover his expenses. It was a temporary expedient. As a salary, it would have been singularly small. One of the employés was getting $200 a month.

2. The next question is whether the claims of the appellees as individual creditors of Estes should be paid out of his individual estate in preference to the claims of the firm creditors. Doubtless the notes executed by the firm and indorsed by Estes were firm debts, as well as individual debts of Estes. But the holders had a right, if they preferred, to present them as claims against Estes individually. And they did so. The notes were originally purchased by the firm of Gartenlaub & Co., of Chicago, which sold them to the banks. Gartenlaub, who acted for the firm, was advised of the fact that Estes individually owned a large amount of real estate, and for that reason required his individual indorsement.

The present bankruptcy act provides:

"The net proceeds of the partnership property shall be appropriated to the payment of the partnership debts, and the net proceeds of the individual estate of each partner to the payment of his individual debts. Should any surplus remain of the property of any partner after paying his individual debts, such surplus shall be added to the partnership assets and be applied to the payment of the partnership debts." Section 5f, Act July 1, 1898, c. 541, 30 Stat. 548 [U. S. Comp. St. 1901, p. 3424].

This is a statutory statement of a general rule early adopted in England (Ex parte Crowder, 2 Vernon, 706), upon which subsequently an exception was ingrafted to the effect that firm creditors may share in the individual assets in competition with individual creditors, if there be no firm assets and no solvent partner. Lowell on Bank. § 125. Loveland, Bank. (2d Ed.) § 99. Recently, in Conrader v. Cohen, Trustee, 9 Am. Bankr. Rep. 619, 121 Fed. 801, 58 C. C. A. 249, the Circuit Court of Appeals of the Third Circuit sustained Judge Buffington (In re Conrader, 9 Am. Bankr. Rep. 85, 118 Fed. 676) in

Digitized by Google

applying this exception under the present bankruptcy act; but in the case of In re Wilcox (D. C.) 94 Fed. 84, Judge Lowell, in an opinion showing unusual research and learning, declined, under the present bankruptcy law, to recognize or apply the exception; holding that firm creditors are not entitled to receive dividends out of a partner's separate estate until his individual creditors have been paid in full, and this notwithstanding there are no partnership assets.

But we are not obliged to choose between these two views. In the present case there are partnership assets of a substantial character. Already a dividend of 15 per cent. has been paid out of them to the firm creditors. The case, therefore, is not one involving questions of law, so much as questions of fact, namely: Was there a partnership? Are there partnership assets? Is there an individual estate? And are the notes of the appellees claims against the individual estate? All these questions, as we read the record, are answered in the affirmative. The two largest pieces of property held by Estes separately were his residence and what is known as the "Indian Creek Farm." The proof is clear that he purchased each of these himself, with his own money, and for himself. They stood in his name, and were always regarded as his individual property. It is true that, in the statement he made out for Gartenlaub, he placed them among the assets of the firm as real estate. But he did so, as he explained, because he was the only solvent member of the firm, and he knew they were liable for the firm debts. In this sense only were they firm assets. Gartenlaub understood this, was advised of the fact that they were owned by Estes individually, and accordingly required his individual indorsement on the notes.

Apparently, reduced to a simple form, the contention of the appellants is that, because all the capital of the firm belonged to Estes, therefore all the capital of Estes belonged to the firm. This is a strange contention. A man may put all the capital a firm has into it, but it does not follow that he puts all the capital he has into it. Estes had other ventures than this mercantile business. He put into it what he saw fit, and, with the consent of his partners, he drew out considerable amounts. The record shows clearly what he put in, what he kept out, and what he drew out. His residence and the Indian Creek farm were never put in. They and all his individual estate should be applied first to the payment of his individual debts, as the court below held.

3. The final claim is made that Estes was indebted to the firm in a very large amount for money drawn out, and the court was asked to compel the collection of this from his individual estate for distribution among the firm creditors. In this way it was sought to convert the separate estate into firm assets, and distribute them pro rata among all the firm creditors, including the appellees. This claim was disposed of by the finding of the referee that it does not appear from the record that Estes "ever was or is indebted to the firm in any amount." In this connection the referee said:

"I find from the evidence before me that Z. N. Estes at the end of the first year of the partnership had put into the firm $128,821.30, and that from this period the amount to his credit varied, running up to $166,770.76 for a short

Digitized by Google

time in 1891, and then declining to $101,188.27 in 1898, and then gradually increasing until he had to his credit as capital in the firm on the date of the bankruptcy thereof, after charging him with all amounts of every kind withdrawn therefrom, the sum of $106,424.13; that the capital originally contributed by him was reduced only $22,397.17, and that the amounts necessary for the support of his family, which, as shown, he was entitled to withdraw from the firm, far exceeded this amount; that up to and including the year 1891 the firm was prosperous, and a large amount of profits was annually credited up to each one of the partners; that there was also interest, under the terms of the partnership articles, credited up to Z. N. Estes up to and including the year 1895, and that the amount of interest and profits thus credited up to him, and which he had a perfect right to withdraw from the firm, amounted up to September 30, 1895, the sum of $146,344.29; that from September 30, 1895, to September 30, 1901, being the period embracing the last six years of the business prior to the bankruptcy of said firm, no interest had been credited to Z. N. Estes; that during all this period he had more than $100,000 of capital in the firm, on which he was entitled to 8 per cent. interest under the partnership articles; that it thus appears he is entitled to a credit on this account. It will be seen that this capital has not been in any respect diminished. In other words, if this credit is placed to his account, the result will show him entitled to about $160,000 at the time of the bankruptcy of the firm. It appears affirmatively from the testimony that all sums drawn by each of the partners were drawn out by mutual consent; that each partner knew what the other partner was drawing out, and for the purpose for which it was being drawn; and that there never was any intention or expectation of calling for the return of any of these sums to the firm. It is clearly established by the proof that every dollar drawn out by Z. N. Estes was drawn out in good faith, for honest purposes, and with the full acquiescence and understanding of Mr. Spicer, and that not a dollar was ever drawn out for the purpose of injuring or defeating any partnership creditor. And it further appears affirmatively by the proof that from 1898 up to the bankruptcy of the firm, in October, 1901, Z. N. Estes, instead of reducing his capital, was gradually increasing the same, and this objection should be sustained. This claim is therefore disallowed."

This finding, affirmed by the court below, has our approval. The judgment of the lower court is affirmed.

(131 Fed. 197.)

RICHMOND LOCOMOTIVE WORKS v. RAMSEY.

(Circuit Court of Appeals, Fourth Circuit. July 12, 1904.)

No. 508.

1. NEGLIGENCE—CONTRACTOR'S SERVANT—INJURIES—QUESTION FOR JURY.

Plaintiff, a negro laborer, was employed by an independent contractor to tear down a wall in defendant's locomotive works during the making of the alterations therein, for which purpose plaintiff climbed on the third round of a ladder, with the width of the wall of the erecting shop of the defendant's works between him and the rail on which a movable crane was operated. Plaintiff reached across the wall and took hold of the rail, and in this position began throwing bricks from the wall, and while so engaged the crane was moved along the rail, crushing plaintiff's hand. At the time defendant's crane operator started the same, when it was about 50 feet distant from the plaintiff's hand, he looked along the track, and saw nothing to cause him to suspect danger to plaintiff, and there was nothing in plaintiff's position to cause the operator to believe that plaintiff's hand, which was dark, was on the rail. *Held*, that such facts did not justify the submission of the case to the jury on the theory that defendant, after plaintiff had put himself in a position of danger, could, by exercise of reasonable care, have discovered the danger, and avoided the injury.

Digitized by Google

On Writ of Error to the Circuit Court of the United States for the Eastern District of Virginia.

C. V. Meredith and M. M. McGuire, for plaintiff in error.

John A. Lamb (H. A. Atkinson and R. T. Lacy, on the brief), for defendant in error.

Before GOFF, Circuit Judge, and BRAWLEY and McDOWELL, District Judges.

McDOWELL, District Judge. This was an action at law, brought by the defendant in error, who will be hereafter designated as the "plaintiff," for damages for personal injury, which resulted in a verdict and judgment in behalf of the plaintiff for $2,917.50. The Richmond Locomotive Works, to be hereafter designated as the "defendant," had some months previous to the accident to the plaintiff let to contract the work of tearing down certain parts of its building and erecting others in lieu thereof. The contractor sublet a part of the work to one Wilson, by whom the plaintiff was employed at the time of the accident. Wilson's men had been at work for some weeks, and the plaintiff, who had also been on the work previously, had been engaged for about a week prior to the accident. The work at which the plaintiff was engaged was in tearing down a brick wall of the old boiler house, which ran at right angles to the erecting shop. The drawing opposite shows the partially demolished brick wall which the plaintiff was tearing down, the ladder on which he was standing at the time, which is leaning against the western wall of the erecting shop, and one of the rails on which ran a crane, which was constantly used in the erecting shop. The crane tracks were about 600 feet in length, and some 39 feet apart. The man who operated the crane was in a cage suspended under the bridge or axle of the crane, on the far side of the erecting shop, and nearly under the more distant rail, with his head about 18 inches beneath the level of the rails. The crane was used for hoisting and carrying heavy machinery and materials from place to place in the erecting room.

On the morning of the accident, Cole, foreman of Wilson, the subcontractor, directed the plaintiff, a negro laborer 23 years old, to go up on the ladder and throw off the bricks composing the boiler house wall to be removed. The plaintiff ascended the ladder until he stood on the third round from the top. He then turned so that his face was towards his work, put his left hand over the crane rail, and, stooping forward and towards his right, commenced to pull out and throw down the bricks with his right hand. While he was in this position, the crane, which was moved slowly from the south (right side of drawing), ran over the plaintiff's hand, and injured it and his forearm to such an extent that the arm had to be amputated. The crane operator did not know of the plaintiff's position until after the injury. The plaintiff knew that the crane was frequently and almost constantly moved up and down the erecting room.

There is a conflict of testimony as to whether the ladder was put in the position shown in the drawing by the plaintiff under Cole's direction, or whether it had for some days been standing as shown. There

Digitized by Google

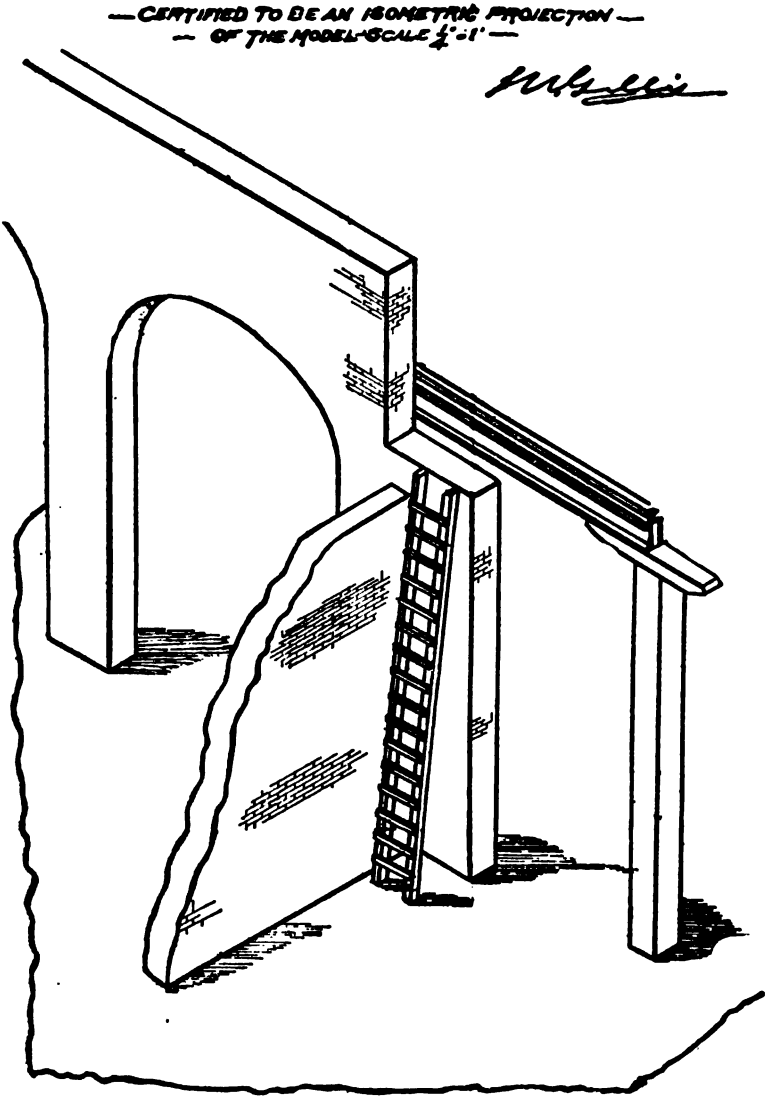

was some testimony for the plaintiff to the effect that Cole, when directing the plaintiff to tear down the wall, told him that the crane would not be operated. This is denied by Cole. There is no evidence that Cole, if he made this statement, had been authorized to make it by any person representing the defendant, or that this statement, if made, was heard by any one representing the defendant. The contract made by the defendant with the contractor provided that the contractor's work should be so carried on as not to interrupt the work of the defendant. And the defendant's work in the erecting shop was being carried on at

Digitized by Google

the time of the injury. So far as appears, no employé of the defendant knew of the plaintiff's position of danger. The crane operator had been engaged by the defendant for about ten years, and for three years prior to the accident he had been operating the crane. It was affirmatively shown that he was competent and careful, and that, if there was any cause of complaint against him, it was that he was wont to move the crane too slowly because of his unusual caution. His testimony, which is wholly uncontradicted, is that he looked down the tracks before starting the crane—which had been for some moments standing some 30 feet south of the place of the accident—and saw nothing to indicate that any one was in danger.

Had the learned trial court taken the view of this case that we feel constrained to take, the jury would have been directed to find for the defendant, and we think the court erred in not giving such instruction. In other respects we find the charge given the jury erroneous, in that it was based on the theory that the defendant, after the plaintiff had put himself in a position of danger, could, by the exercise of reasonable care, have discovered his danger and avoided the injury. But to us, even without considering the fact that the plaintiff's negligence continued until the moment of the injury (Gilbert v. Erie R. Co., 97 Fed. 747, 38 C. C. A. 408; Kirtley v. Chicago R. Co. [C. C.] 65 Fed. 386; St. Louis R. Co. v. Shumacher, 152 U. S. 77, 81, 14 Sup. Ct. 479, 38 L. Ed. 361; Rider v. Syracuse R. Co. [N. Y.] 63 N. E. 836, 58 L. R. A. 125; Fonda v. St. Paul R. Co., 71 Minn. 438, 74 N. W. 166, 70 Am. St. Rep. 341; Montgomery v. Lansing R. Co., 103 Mich. 46, 61 N. W. 543, 29 L. R. A. 287), it seems that there was no evidence making this rule applicable. The plaintiff had unnecessarily taken an unusual and extraordinary position. He was standing on the third round of the ladder, with the width of the wall of the erecting shop between him and the rail, leaning towards the partially demolished wall of the boiler house. There was nothing in his position, as viewed from the situation of the crane operator, which would have suggested to the latter that the plaintiff had his hand on the rail. The erecting shop was under roof, and it appears that it was rather dark. The plaintiff is a negro, and his hand therefore would not have attracted the attention of the crane operator. According to his uncontradicted testimony, the crane operator looked along the tracks before starting the crane, and saw nothing to cause him to suspect the danger of the plaintiff. The crane operator was, when he started the crane, about 50 feet distant from the plaintiff's hand. At the very moment of the accident he was nearly 40 feet distant, with his head some 18 inches below the level of the rail. In looking down the tracks to see if the way was clear, if he had seen the plaintiff's head, or his head and shoulders, he would not have been led to suspect that the plaintiff had his hand in the extraordinary position in which he did have it. The back of the plaintiff's head was toward the crane operator. Under these circumstances negligence could not be imputed to the defendant. There was, therefore, no room for the application of the rule of law on which was based the charge to the jury. It follows that it is unnecessary to consider the other assignments of error.

We are of opinion to reverse the judgment below, and remand this cause for proceedings consistent with this opinion. Reversed.

Digitized by Google

(131 Fed. 242.)

GALOW v. CHICAGO, M. & ST. P. RY. CO.

(Circuit Court of Appeals, Seventh Circuit. April 12, 1904.)

No. 979.

1. MASTER AND SERVANT—INJURIES TO SERVANT—DEFECTIVE APPLIANCES.

Where a partition made of planks nailed to piles under a railroad trestle was temporarily erected to separate piles of broken stone and sand dumped under the trestle, to be used in making certain concrete foundations, and such partition was put up, taken down, and transferred as the work progressed by the workmen themselves, the master was not liable for injuries to a servant caused by his being struck by three of the planks which fell from the top of the partition by reason of their being insufficiently secured.

In Error to the Circuit Court of the United States for the Northern District of Illinois.

The action in the Circuit Court was to recover for personal injuries sustained by plaintiff in error, while at work on the railway tracks of the defendant in error, near Janesville, Wisconsin. The substantial facts brought to the attention of the court and jury were without dispute.

The tracks of the defendant in error entering Janesville, Wisconsin, pass over a high trestle on wooden piles. At the time of the injury complained of, the defendant in error was engaged in constructing concrete piers to support the tracks at their under crossings, in which work a large force of men was employed. To carry on this work, crushed stone and sand was, from time to time, unloaded from cars on the trestle to the ground below; and to separate the stone from the sand, a temporary wooden partition about sixteen feet high had been put up. The partition consisted of planks laid on edge crosswise of the trestle, and nailed to the upright piles. The partition was put up by the men themselves. At times the stone heap lying on one side of the partition would rise in the middle to a height of twenty feet; the sand heap on the other side being somewhat lower; but both the stone heap and the sand heap were in constant change, as stone and sand was being carried off by the workmen, in the progress of the work.

Plaintiff in error was, at the time of the injuries, engaged with others in wheeling stone from the pile to a mixer near by. Nearly all the stone had been removed, but the partition still remained. In this state of things, while engaged in loading a wheelbarrow, three of the top planks fell from the partition upon the back of the plaintiff in error, inflicting the injuries for which the action was brought.

The further facts are stated in the opinion of the court. At the close of all the evidence, the court, on motion, directed a verdict for the defendant, and from the judgment entered on such verdict, the writ of error is prosecuted.

Richard Fischer, for plaintiff in error.

Charles B. Keeler, for defendant in error.

Before JENKINS, GROSSCUP, and BAKER, Circuit Judges.

GROSSCUP, Circuit Judge, after the foregoing statement of facts, delivered the opinion of the court.

It is clear that the partition fence was of the simplest kind of construction, requiring no skill—a mere temporary appliance to the work being done. It was put up, taken down, and transferred, as the work progressed, and the piles of sand on one side, and of stone on the other, rose or fell away from day to day.

It is equally clear that the erection, maintenance, and removal of the fence, was one of the details of the work necessarily entrusted to the

Digitized by Google

workmen themselves. To the mere adjustment of such appliances, and their maintenance in a safe condition, the responsibility of the master to give a safe place in which to work, does not extend. Armour v. Hahn, 111 U. S. 318, 4 Sup. Ct. 433, 28 L. Ed. 440; Butler v. Townsend, 126 N. Y. 112, 26 N. E. 1017. This, indeed, is not a case where the master failed to give the servant a safe place in which to work. It is a case, rather, in which a servant in the performance of his work, was overtaken by an accident, due to the giving away of an appliance for the strength and safety of which he, along with the other workmen, was responsible.

The judgment will be affirmed.

(131 Fed. 680.)

PATILLO et al. v. ALLEN-WEST COMMISSION CO.

(Circuit Court of Appeals, Eighth Circuit. August 8, 1904.)

No. 1,920.

1. LIMITATION OF ACTIONS—AMENDMENT OF PLEADING—RELATION TO BEGINNING OF ACTION.

An amendment to a petition, which sets up no new cause of action or claim, and makes no new demand, but simply varies or expands the allegations in support of the cause of action already propounded, relates back to the commencement of the action, and the running of the statute against the claim so pleaded is arrested at that point. But an amendment which introduces a new or different cause of action, and makes a new or different demand, does not relate back to the beginning of the action, so as to stop the running of the statute, but is the equivalent of a fresh suit upon a new cause of action, and the statute continues to run until the amendment is filed; and this rule applies although the two causes of action arise out of the same transaction, and, by the practice of the state, a plaintiff is only required in his pleading to state the facts which constitute his cause of action.

2. SAME—RULE APPLIED.

A complaint stated facts from which the law raises the legal presumption of a promise to pay the balance of an account stated, and demanded judgment for that amount. An amendment was made to this complaint by adding to it an averment of a promise to pay the balance of the stated account. *Held*, this amendment presented no new cause of action, but simply expanded the allegations in support of the cause of action presented in the original complaint, and the amendment related back to the commencement of the action, where the running of the statute of limitations against the cause of action upon the account stated ceased.

3. ACCOUNT STATED—ESTOPPEL TO DENY LIABILITY.

An account stated, conceded to disclose some just indebtedness received and retained by the debtor without objection for an unreasonable time, estops him, in the absence of fraud or mistake, from denying his liability for all the items it contains, and raises the legal presumption of his promise to pay the balance. A consideration and legal liability for each item outside of the stated account is not essential to sustain a cause of action to recover its balance. The balance is one debt, regardless of the items, and a consideration for that debt is sufficient.

4. TRIAL—COURT MAY WITHDRAW QUESTION OF FACT FROM JURY.

Where the evidence upon a question of fact is so clearly preponderant, or of such a conclusive character, that the court would be bound, in the

---

¶ 3. See Account Stated, vol. 1, Cent. Dig. §§ 31, 42.

Digitized by Google

exercise of a sound judicial discretion, to set aside a finding in opposition to it, it is its duty to withdraw the question from the jury and direct their finding.

(Syllabus by the Court.)

In Error to the Circuit Court of the United States for the Eastern District of Arkansas.

J. W. House (H. A. Tillett and M. House, on the brief), for plaintiffs in error.

J. M. Moore (G. B. Rose, on the brief), for defendant in error.

Before SANBORN, VAN DEVANTER, and HOOK, Circuit Judges.

SANBORN, Circuit Judge. This is an action by the Allen-West Commission Company, the plaintiff below, a corporation, to recover of Smith, Patillo & Co., a partnership, a balance of an account current. This balance consists of three items—one of $1,025, due September 1, 1892; one of $1,198.75, due September 1, 1893; and one of $508, due September 1, 1894—for commissions on cotton not shipped, at the rate of $1.25 per bale. At the trial below the jury allowed the first two items upon the ground that they were parts of a stated account between the parties, and disallowed the third item, which is no longer in issue in this case.

The alleged error in the trial upon which the defendants place their chief reliance is that the cause of action upon the stated account arose in 1898, that it was barred by the statute of limitations in either three or five years thereafter, and that, although this action was commenced on April 25, 1895, the cause upon the stated account was first presented to the court below by an amendment to the complaint on July 15, 1903. This cause of action was undoubtedly barred by the statute of limitations if the effect of the amendment was not simply to vary or expand the allegations in support of the cause of action pleaded in the original complaint, but to introduce a new or different demand, not before presented in the pending suit. The rule of law upon this subject is that "an amendment to a petition which sets up no new cause of action or claim and makes no new demand, but simply varies or expands the allegations in support of the cause of action already propounded, relates back to the commencement of the action, and the running of the statute against the claim so pleaded is arrested at that point. But an amendment which introduces a new or different cause of action, and makes a new or different demand, not before introduced or made in the pending suit, does not relate back to the beginning of the action, so as to stop the running of the statute, but is the equivalent of a fresh suit upon a new cause of action, and the statute continues to run until the amendment is filed." Whalen v. Gordon, 95 Fed. 305, 309, 37 C. C. A. 70, 74; Railway Co. v. Wyler, 158 U. S. 285, 289, 298, 15 Sup. Ct. 877, 39 L. Ed. 983; Railway Co. v. Cox, 145 U. S. 593, 601, 606, 12 Sup. Ct. 905, 36 L. Ed. 829; Sicard v. Davis, 6 Pet. 124, 8 L. Ed. 342; Van De Haar v. Van Domseler, 56 Iowa, 671, 676, 10 N. W. 227; Jacobs v. Insurance Co., 86 Iowa,

Digitized by Google

145, 53 N. W. 101; Buel v. Transfer Co., 45 Mo. 563; Scovill v. Glasner, 79 Mo. 449, 453; Crofford v. Cothran, 2 Sneed, 492; Railroad Co. v. Jones, 149 Ill. 361, 37 N. E. 247, 24 L. R. A. 141, 41 Am. St. Rep. 278; Eylenfeldt v. Steel Co., 165 Ill. 185, 46 N. E. 266; Railroad Co. v. Campbell, 170 Ill. 163, 167, 49 N. E. 314; Christy v. Farlin, 49 Mich. 319, 13 N. W. 607; Flatley v. Railroad Co., 9 Heisk. 230, 237; Buntin v. Railway Co. (C. C.) 41 Fed. 744, 749; Newton v. Allis, 12 Wis. 378; Railroad Co. v. Smith, 81 Ala. 229, 1 South. 723. The only question here presented, therefore, is whether the amendment merely expanded the allegations in support of a cause of action upon a stated account which was propounded in the original complaint, or introduced a new and different cause and made a new demand which was not before presented in this action.

This is the third appearance of this case in this court, and its history is interesting. In the original complaint the plaintiff alleged that in the early part of the year 1891 the defendants applied to it to advance moneys to them to be used in their business of purchasing cotton, and agreed to ship to it 100 bales of cotton for every $1,000 advanced to them in the spring and summer of each year, and that, if they failed to ship that amount, they would pay to the plaintiff $1.25 for each bale of the deficiency each year as long as they retained the use of the plaintiff's money; that during the year 1891 and during subsequent years the plaintiff transacted business with the defendants, and advanced money to them; that "during the continuance of said business down to and including the year 1893 it furnished the defendants at stated periods,,and at other times when requested, statements of the accounts between them, which were received without objection; that at the end of the year 1893 plaintiff furnished the defendants a statement of account showing a balance due it for advances made by the plaintiff to the defendants, and for commissions on cotton which defendants had theretofore failed to ship to plaintiff under and in accordance with the aforesaid agreement, whereupon shortly thereafter defendants, without objection, paid plaintiff on said account the sum of $2,996.27, leaving a balance due plaintiff of $2,504.75, which sum, with interest thereon, and the further sum of $508.53, due for commissions on 407 bales of cotton, which under the understanding and agreement between plaintiff and the defendants, as aforesaid, defendants should have shipped to plaintiff during the season of 1893 and 1894, and did not ship, is now due by the defendants to plaintiff." The defendants, by their answer, denied the agreement, admitted the advances and the receipt of the statements of account, averred objections to them, and that the agreement was usurious. There was a trial, and a verdict for the defendants. Thereupon the plaintiff removed the case to this court, where the judgment was reversed because the court below refused to charge the jury that, in view of the plaintiff's letters and statements of account, and the silence of the defendants, they could not dispute the item of $1,025 charged in the statement rendered them for commissions on cotton not sold. Allen-West Com. Co. v. Patillo, 90 Fed. 628, 630, 631, 632, 33 C. C. A. 194, 196, 197, 198. In the statement preceding the opinion

Digitized by Google

then rendered will be found a copy of the complaint, and in the opinion a review of the letters, statements of account, and acts of the parties which led to this decision. At all the trials there have been introduced in evidence a statement of account rendered to the defendants on July 1, 1892, which contained the item, "To Com. on 820 b/c at $1.25, 1025," and disclosed a balance of $15,388.14 due from the defendants to the plaintiff, and a statement of account rendered December 20, 1893, which contained the item, "To Commissions on 959 b/c, deficiency season 1892-93, should have shipped 1033 b/c, while you only shipped 74 b/c C 1.25 1198.75," and presented a balance due from the defendants to the plaintiff of $5,364.-58. In the first opinion rendered in this case this court said:

"As we view it, this was a factor's charge for commission under his contract with his principal, and related to the same subject-matter as the interest and other commissions; that it could not have been omitted from the account stated without thereby waiving the right to it, and binding the plaintiff to a stated account which did not include it; and when the defendants received it, accepted it, and acted and permitted the plaintiff to act upon it, it became a stated account against them, which could only be set aside by proof of fraud or mistake. * * * If the law will presume an agreement from silence in any case, we think it will in this case, and that the accounts which have been rendered by the plaintiff, and received by the defendants without objection, must be considered as stated or settled accounts, and as liquidated by the parties, as fully so as if they had been signed by both. The balance is a debt as a matter of contract implied by the law. It is to be considered as one debt, and a recovery may be had upon it without regard to the items which compose it. Atkinson v. Allen, 71 Fed. 58, 60, 17 C. C. A. 570, 572, 36 U. S. App. 255, 260; Porter v. Price, 80 Fed. 655, 657, 26 C. C. A. 70, 72, 49 U. S. App. 295, 300"; 90 Fed. 631, 632, 33 C. C. A. 196, 197, 198.

Upon the second trial the Circuit Court instructed the jury to return a verdict for the plaintiff for the amount of the three items in dispute, less a small amount of interest, upon the ground that no objection to the account rendered and no fraud or mistake in them had been proved. The defendants sued out a writ of error, and when it was presented to this court the record disclosed evidence that timely objection had been made to the third item of $508.75, which was due September 1, 1894, so that it was necessary to again reverse the judgment. The majority of the court expressed the view, in which the writer of this opinion has never been able to concur (Patillo v. Allen-West Com. Co., 108 Fed. 723, 730, 731, 47 C. C. A. 637, 644, 645), that, although the complaint stated the facts from which a legal presumption of a promise to pay the balance of a stated account necessarily arises, it failed to state a cause of action upon an account stated, because it did not contain an express averment of the legal conclusion, the promise to pay the balance.

When the case returned to the court below for the third trial, and on January 15, 1903, the plaintiff amended its complaint by adding to the allegations which it originally contained the averment that at the various times when the defendants received the statements of account without objection they promised to pay the balances which appeared thereon to be due. This is the amendment which is challenged upon the ground that it introduced a new

Digitized by Google

and independent cause of action not before presented in this suit. Conceding that the opinion of the majority of this court at the last hearing that the original complaint did not contain a perfect statement of a cause of action upon a stated account because it did not contain the averment of the implied promise to pay the balance is now the law of this case, this averment cannot be said to have introduced a new or different cause of action, or to have made a new or different demand from those presented in the original complaint. The demand under the amended complaint is for the same items and for the same amount as that under the original complaint. The cause of action upon the stated account was so clearly propounded in the first complaint that the court below twice tried it, and this court once reviewed its trial, before any defect in its statement was discovered. The fact that the complaint stated two good reasons—the alleged contract and the stated account—why the plaintiff was entitled to a recovery, in no way detracts from the sufficiency of the statement of either cause of action. The truth is that the averment of the promise to pay the balances of the accounts rendered, which the law implied from the facts stated in the original complaint, was nothing but the expansion of the allegations in that pleading in support of the cause of action upon the account stated. It was germane to the cause of action stated in the original complaint. It wrought no departure from that pleading. The amendment which introduced it was properly allowed by the court below, and it related back to the commencement of the action where the running of the statute of limitations against the cause of action upon the account stated ceased. The contention that this cause of action was barred by the statute of limitations because it was not presented until this slight amendment to its statement was introduced cannot be sustained.

G. W. Smith, one of the defendants, testified that in the latter part of the summer of 1893 he told Exall, an agent of the plaintiff, that it was claiming that he made a contract to pay commissions on cotton not shipped, that the plaintiff had charged these commissions in some account rendered, that he had never made an agreement of this nature, and that the defendants could not and would not pay the commissions. This is the only evidence in the record of any objection to the statements of account or to the commissions for cotton not shipped prior to the month of February, 1894. Exall testified that Smith never had any such conversation with him. Allen, a witness for the plaintiff, testified, and Smith denied, that the latter agreed to pay commissions on cotton not shipped in the spring of the year 1891. The accounts which contain the charges of the two items of commissions in controversy were sent to the defendants on July 1, 1892, and December 20, 1893, respectively. In a letter to the defendants dated April 3, 1891, the plaintiff wrote: "Your Mr. George Smith has been here, and has returned home. He informed us that from this time forward your firm will do all your business with us and will guarantee us a bale of cotton for every $10 of spring and summer advances." On October 29, 1891, the plaintiff wrote: "Your agreement was to ship

Digitized by Google

us a bale of cotton for every $10 of the spring and summer advances, or pay the commission on the same. Our desire is always to do the work by selling the cotton. We never like to charge commissions when the cotton has not been shipped, but, so far, we have received bills of lading for only 200 and odd bales." On February 24, 1892, plaintiff wrote defendants that they owed it $13,138.50, and requested a settlement. On April 11, 1892, the defendants wrote the plaintiff to sell all their cotton, and that they would make some satisfactory arrangement with it. On May 27, 1892, the plaintiff wrote to the defendants that, if they desired to keep its money, it wanted a clear understanding, such as it had the preceding year, that they would ship it 100 bales of cotton for every $1,000 carried over during the spring and summer, or would pay it $1.25 per bale for any deficit up to that amount; and the defendants answered that as soon as the plaintiff had sold all their cotton they would have a settlement, and make their account satisfactory. On June 24, 1892, the plaintiff wrote to the defendants that it charged them commissions as agreed between Smith and it at the rate of 100 bales of cotton for every $1,000 carried over the spring and summer; that they and G. W. Smith & Bro. owed it on September 1, $15,219; that they should have shipped 1,522 bales; that they did ship only 702 bales; and that the plaintiff was entitled under the agreement to commissions on 820 bales at $1.25 per bale, or $1,025, which it had charged to them. On July 1, 1892, it sent them a statement of account which contained this charge. On the next day the defendants wrote to the plaintiff a letter in which they remitted $5,000, and made no objection to the charge. On November 12, 1892, they wrote that they had been trying to get some cars to ship some cotton, and as soon as they could get them they would ship. On March 29, 1893, the defendants wrote to the plaintiff: "We write to know if we pay you, say $5,000, about the middle of April, how would it suit you to carry the balance over another year." The plaintiff answered on April 1, 1893: "If you pay us the $5,000 in the middle of April and guarantee to ship us 100 bales of cotton for every $1,000 carried over, or advanced in the spring and summer (which are the very best terms we can give anybody) of course we will carry the balance over for you, and if you fail to ship us cotton pay us commissions." The defendants replied: "You will please find $4,500 for our credit in account. Will write you again soon." On June 19, 1893, and again on November 11, 1893, the defendants wrote that, if they could get some money, they would pay the plaintiff all they owed to it. On December 15, 1893, the plaintiff sent the account which contained the second item of commissions upon cotton not shipped, and on February 15, 1894, the defendants wrote to it, apparently for the first time, that they never expected to pay it any money upon cotton not shipped, unless the courts decided otherwise.

It is assigned as error that in this state of the case the court charged the jury that there was no evidence to show that any objections were ever made to the two accounts within a reasonable time, and that it refused to instruct them that they should consider

Digitized by Google

and determine whether or not G. W. Smith objected to the commissions on cotton not shipped in the latter part of the summer of 1892, and whether or not this was an objection to the accounts within a reasonable time. But when the evidence upon a question of fact is so clearly preponderant, or of such a conclusive character, that the court would be bound, in the exercise of a sound judicial discretion, to set aside a finding in opposition to it, it is its duty to withdraw the question from the jury and direct its finding. Southern Pacific Co. v. Pool, 160 U. S. 438, 440, 16 Sup. Ct. 338, 40 L. Ed. 485; Union Pac. R. Co. v. McDonald, 152 U. S. 262, 283, 14 Sup. Ct. 619, 38 L. Ed. 434; Delaware, Lackawanna, etc., Railroad v. Converse, 139 U. S. 469, 472, 11 Sup. Ct. 569, 35 L. Ed. 213. The testimony of Smith upon this question, in view of the denial of Exall, and of the writings which have been recited, and which so clearly portray the attitude of the parties during the two years when this account was current and during which the two itemized statements were rendered, is too incredible to sustain a finding that he made the complaint or objection to which he testified. The court rightly withdrew the question of timely objection to the accounts from the jury.

It is assigned as error that the court refused to instruct the jury that if they found that there was fraud or mistake in entering any of the items in the account they should deduct these items from the amount claimed by the plaintiff, and that it charged them that there was no evidence of any fraud or mistake that would justify a reexamination of the accounts, save in regard to two small items, which it specified, and directed the jury to disallow. A careful examination of the record, however, discloses no evidence sufficient to sustain a finding of fraud or mistake in the entry of any other item in these accounts. Our attention has been especially called to the testimony relative to $300 of the item of $1,025 charged in the account of July 1, 1892. This $300 consisted of a commission of $1.25 per bale on 240 bales of cotton not shipped, and it was based on a charge to the defendants on December 18, 1891, of $2,406.26, a balance of the account of the plaintiff against G. W. Smith & Bro. This $2,406.26 was the amount which G. W. Smith & Bro. owed to the plaintiff on September 1, 1891. It was the balance of the plaintiff's spring and summer advances to Smith & Bro., and this balance was charged to the defendants, who were their successors, on December 18, 1891. There was no agreement between G. W. Smith & Bro. and the plaintiff that the former should pay commissions on cotton not shipped. The plaintiff asserted and the defendants denied that this $2,406.26 advanced to Smith & Bro. in the spring and summer of 1891 fell within the disputed agreement between plaintiff and defendants. The evidence in the record discloses the fact that the right to charge every dollar of the commissions was in dispute at the trial as well as the right to charge that portion of the commissions which was based upon the $2,406.26. There was, however, no evidence that the charge of the $300 commissions based upon this balance was fraudulently or unintentionally made in the itemized account delivered to the defendants, or

Digitized by Google

that the latter did not receive the same notice of this charge, and did not become bound to pay it by their failure to object to it as firmly as they were to every other portion of the $1,025 of which it formed a part. Indeed, the evidence that this charge was not mistaken is full and clear. The plaintiff not only sent to the defendants the account which contained it on July 1, 1892, but on June 24th preceding they wrote them that "Smith, Patillo & Company and G. W. Smith & Brother owed us on the 1st of September, without interest, $15,219.00, so they should have shipped us 1,522 bales of cotton. They only shipped us 702 bales, so we are entitled to commissions on 820 bales, at the rate of $1.25 per bale, which was the agreement between Mr. Smith and ourselves. You probably saved money by not shipping the cotton as the market during cotton shipping time was declining, so we charge you with $1,025.00 commissions on cotton not shipped, as per agreement, which we hope you will find correct and satisfactory." There was surely no fraud, deceit, or concealment in this charge. It certainly was not made by mistake or inadvertence, for this letter shows that the amount of it was carefully computed upon the indebtedness of both Smith & Bro. and the defendants. The latter had complete notice of the charge, of the amount, and of the basis of it, and there is no evidence that it was through any mistake that they failed to object to it. There was no error in the charge of the court upon the subjects of fraud and mistake.

The question whether or not any agreement was made in 1891 to the effect that the defendants should pay commissions on cotton not shipped, the question whether or not the contracts of the parties were usurious, and the question whether or not the defendants were liable for the two items of $1,025 and $1,198.75 on an account stated were submitted to the jury for their determination. The court charged that, if there was a contract in 1891 to pay these two items, the plaintiff might recover upon that ground; and that, if the two accounts of July 1, 1892, and December 20, 1893, contained charges of these two items, and those accounts were received and retained by the defendants without making any objection to them within a reasonable time, then the plaintiff was entitled to recover these amounts whether there was any previous express contract to pay them or not. The latter portion of this instruction is assigned as error. But it is not indispensable to a cause of action for the balance of an account stated that the defendants should have been legally liable for every item in it upon some other ground before the itemized account is delivered. Such a rule would nullify the effect of the stated account, and destroy the cause of action upon it. The only legal effect and virtue of an account stated is that it estops its recipient from denying his liability for the charges it contains, whether he was actually liable for them or not, and that it raises a legal presumption that he promised to pay the balance of the account. It is the law of this case, under the decision of this court in Allen-West Commission Co. v. Patillo, 90 Fed. 631, 632, 33 C. C. A. 197, 198, as well as the general and salutary rule upon this subject, that one may become bound by virtue of an account stated

Digitized by Google

to pay charges contained therein for which he was not previously legally liable. "The balance is a debt as a matter of contract implied by law. It is to be considered as one debt, and a recovery may be had upon it without regard to the items which compose it." 90 Fed. 632, 33 C. C. A. 198; Marye v. Strouse (C. C.) 5 Fed. 483, 496; Porter v. Price, 80 Fed. 655, 658, 659, 660, 26 C. C. A. 70, 73, 74, 75; Backus v. Minor, 3 Cal. 231; Young v. Hill, 6 Hun, 613; Bainbridge v. Wilcocks, Baldw. 536, Fed. Cas. No. 755; Freeland v. Heron, 7 Cranch, 147, 3 L. Ed. 297. There was no error in the instruction of the court upon this subject, or in its refusal to charge to the contrary.

For the same reason the challenge of the instructions of the court and of its refusals to instruct with reference to the liability of the defendants outside of the stated account to pay the items of $1,198.75 and $300, and with reference to the right of the defendants to a credit for 230 bales of cotton not credited to them in the account, cannot be sustained. The criticism of the charge and of the refusals to instruct might be worthy of consideration if the question to be considered now was whether or not there was error in the trial of the issue whether or not the charges and credits in the itemized accounts were correct. That is not the question we are now considering. The stated account estopped the defendants to deny its correctness. Counsel for the defendants concede—nay, more, they insist—that this record demonstrates the fact that the jury found that there was no agreement between the parties to the effect that the defendants should pay any commissions on cotton not shipped prior to the rendition of the itemized accounts. The evidence and the verdict of the jury sustain this contention. If there were any errors in the charge of the court or in its refusals to instruct the jury relative to the question of the defendants' liability under the alleged agreement of 1891, those errors were not prejudicial to the defendants, because the verdict was in their favor upon that issue. It is therefore useless to consider them, because error without prejudice is no ground for reversal.

The only question remaining is whether or not there was any error in the charge or the refusals to instruct as requested relative to the issue whether or not there was a stated account. Upon this issue the correctness of the items in the account was not open to dispute. The question was, in the absence of mistake and fraud, whether the accounts were received and retained for an unreasonable time without objection. Upon this issue there was no error in the instruction of the court, and, so far as the refused instructions related to this question, and were not embodied in the charge, they were either immaterial or incorrect. The answer to all the contentions of the defendants with reference to the items of the account is that upon the issue of stated account or not, where an account current of many items, some of which represent a just indebtedness, is delivered to the debtor, its receipt and retention without objection estops the recipient from denying liability for the items which it contains and the balance it discloses. It was not fatal to the cause of action upon the account that one or more of the items

Digitized by Google

in it were without consideration, provided there was a good or valuable consideration for other items which were merged in the balance. If there is a valuable consideration for the single debt evidenced by the balance, the promise to pay it implied by the law from the silent acceptance of the statement will sustain the action.

A careful examination of the various assignments of error to which reference has not been separately made, and of the record, satisfies us that there was no prejudicial error in the trial of this case, and the judgment below is affirmed.

(131 Fed. 689.)

LOCKARD et al. v. ASHER LUMBER CO. et al.

(Circuit Court of Appeals, Sixth Circuit. July 6, 1904.)

No. 1,304.

1. FEDERAL COURTS—STATE STATUTES—STATE DECISIONS.
   Where an action in the federal court depends on the construction of a state statute providing for the sale of state lands, the federal court is required to adopt the construction placed on the statute by the highest court of such state.

2. SAME—PUBLIC LANDS—SALE—PATENTS—STATUTES—CONSTRUCTION.
   Rev. St. Ky. c. 102, § 3, provides that any person who wishes to appropriate any vacant and unappropriated lands, on application to the county court of the county in which the same lies, paying at such price as the court may allow, not less than $5 per 100 acres therefor, may obtain an order of court authorizing him to enter and survey any number of acres of such land in the county, not less than 25 nor more than 200. *Held*, following the decisions of the Kentucky Court of Appeals, that such act did not preclude the survey of several tracts of 200 acres each by the same person, and that a patent for lands so surveyed was not void on its face because it conveyed more than 200 acres.

Appeal from the Circuit Court of the United States for the Eastern District of Kentucky.

For opinion below, see 123 Fed. 480.

Morris & Newberger, A. E. Wilson, and Holt & Alexander, for appellants.

W. B. Dixon and Beckner & Jouett, for appellees.

Before LURTON, SEVERENS, and RICHARDS, Circuit Judges.

RICHARDS, Circuit Judge. This was a suit in equity to quiet the title to a tract of land in Harlan county, Ky., containing 40,400 acres. Some of the defendants demurred and others answered. To portions of the answers the plaintiffs filed exceptions. The plaintiffs claimed under a patent issued by the state of Kentucky to C. O. Lockard, their devisor, on November 4, 1873. The patent was issued under chapter 102 of the Revised Statutes of Kentucky, which took effect July 1, 1852. The question raised by the demurrers and exceptions was

¶ 1. State laws as rules of decision in federal courts, see notes to Griffin v. Wheel Co., 9 C. C. A. 548; Wilson v. Perrin, 11 C. C. A. 71; Hill v. Hite, 29 C. C. A. 553.

See Courts, vol. 13, Cent. Dig. §§ 957, 959.

Digitized by Google

whether a patent issued under that act for a greater quantity of land than 200 acres was or was not void on its face. The defendants below claimed it was. The court below, in an able opinion, upheld this claim, sustaining the demurrers and overruling the exceptions. From this an appeal has been taken.

Section 3 of the act in question, under which the patent was issued, provided as follows:

"Any person who wishes to appropriate any vacant and unappropriated lands, may, on application to the county court of the county in which the same lies, and paying at such price as the court may allow, not less than five dollars per hundred acres, therefor, obtain an order of court authorizing him to enter and survey any number of acres of such land in the county, not less than twenty-five nor more than two hundred.

"1. The party obtaining such order may, by an entry in the surveyor's book of the county, describing the same, appropriate the quantity of land it calls for in one or more parcels, as he may think proper.

"2. The surveyor shall survey the entries in the succession in which the same are made, bounding the same by plainly marked trees, stones, or stakes, noting where it binds on a watercourse, or the marked line of another survey, giving names. It shall be made in the presence of two disinterested housekeepers as chainmen, whose names must be placed at the bottom of the plat and certificate.

"3. Such survey must be made within two months from and after the date of the entry.

"4. A plat and certificate of the survey must be made out by the surveyor and recorded in his books, and the original thereof, and a copy of the order of the court under which it is made, must be deposited in the register's office within four months after the survey is made.

"5. A patent may issue on the survey within three months after a plat and certificate thereof, and a copy of the order are filed in the register's office.

"6. When a survey has been carried into grant, the register shall write across the face of the order on which the survey was made, 'satisfied,' and sign his name thereto.

"7. The legal title of the land shall bear date from the time of making the survey.

"8. None but vacant land shall be subject to appropriation under this chapter. Every entry, survey, or patent, made or issued under this chapter, shall be void so far as it embraces lands previously entered, surveyed or patented.

"9. A plat and certificate of survey shall be assignable, and the assignment thereof shall authorize a patent to issue thereon to the assignee.

"10. The register may receive plats and certificates of survey after the expiration of the time herein allowed for returning the same; but, in such case, the legal title shall take effect only from the date of the patent.

"11. No land shall be subject to appropriation under this chapter that has reverted to the commonwealth by escheat, or has been forfeited for an omission to list the same for taxation, or for failing to pay the taxes thereon, or which has been once patented and the title of the same has in any way become again vested in the commonwealth."

The construction of this statute—the ascertainment whether it does or does not prohibit the issue of a patent for more than 200 acres—is obviously a Kentucky question. The federal courts follow the rule laid down by Chief Justice Marshall in Polk's Lessee v. Wendal, 9 Cranch, 87, 97, 3 L. Ed. 665:

"In the cases depending on the statutes of a state, and more especially in those respecting titles to land, this court adopts the construction of the states, where that construction is settled and can be ascertained."

The statute has been before the highest court of Kentucky in six cases. Register v. Reid, 72 Ky. 103, decided October 21, 1872; Breathitt Coal, Iron & Lumber Company v. Strong, 51 S. W. 189, 21 Ky. Law Rep.

Digitized by Google

302, decided in 1899; West v. Chamberlain, 58 S. W. 584, 22 Ky. Law Rep. 687, decided in 1900; American Association, Limited, v. Innis, 60 S. W. 388, 22 Ky. Law Rep. 1196, decided in January, 1901; and Uhl v. Reynolds, Register, 64 S. W. 498, 23 Ky. Law Rep. 759, and Nickels v. Commonwealth, 64 S. W. 448, 23 Ky. Law Rep. 778, both decided in September, 1901.

The patent demanded in Register v. Reid appeared to be for an additional tract of 200 acres only, but, as developed in Breathitt, etc., Co. v. Strong, was ultimately issued for 154,800 acres, the patent in the latter case being the identical one issued because of the decision in the former. The patent in American Association, Limited, v. Innis covered 12,400 acres, that in Uhl v. Reynolds, 200,000 acres, and that in Nickels v. Commonwealth 34,800 acres. The patent before us was issued after the decision in Register v. Reid, and it is claimed, upon the faith of it, in accordance with the resultant practice of the register's office. Up to the time of the decision it was a doubtful question whether a person could purchase and obtain by patent more than 200 acres. Orders had been obtained and surveys made by the same person for more than 200 acres, and pending the decision acts had been passed in March, 1872, authorizing the issue in certain counties of patents upon such orders and surveys. This was, in effect, a legislative decision or declaration with respect to the question pending in Register v. Reid. The statute itself contains no inhibition against the obtaining by one person of several orders and surveys, nor any against the inclusion in one patent of several orders and surveys thus obtained. The inhibitions contended for are implied from other provisions and what is asserted to be the policy of the law. Obviously, the fundamental question was whether several orders and surveys could be obtained by the same person, for, if one person could obtain several orders and surveys, there would seem to be no reason why the state should not grant a patent covering them. What the state had a right to sell, it would seem to have the right to convey, and in one instrument. Polk's Lessee v. Wendal, 9 Cranch, 87, 95, 3 L. Ed. 665; Smelting Co. v. Kemp, 104 U. S. 636, 653, 26 L. Ed. 875. The statute authorizes any person who wishes to appropriate any vacant land to apply to and obtain from the county court an order authorizing him to enter and survey not more than 200 acres. This limits the order to 200 acres, but that is the extent of it. A subsequent paragraph provides that "a plat and certificate of survey shall be assignable, and the assignment thereof shall authorize a patent to issue thereon to the assignee." In view of the presence of this provision, the lack of any express inhibition, and the supposed policy of the act, the court held in Register v. Reid that there was no limitation on the number of orders the same person might obtain; in other words, no limitation on the number of acres a person might purchase from the state under this act. Respecting the policy of the law, the court said:

"This court knows judicially, moreover, that before the adoption of the Revised Statutes nearly or quite all of the lands of the state of much value for farming purposes had been appropriated, and that the chief value of the residue consisted in the timber and minerals they contained; and it is not certain that the prohibition contended for might not operate to prevent their appropriation

Digitized by Google

for those purposes, and tend to deprive the commonwealth of the revenue which they would yield in the hands of private owners." 72 Ky. 105.

And regarding the practice of the land officers, it is said:

"If, however, the meaning of the statute, so far as it involves the question under consideration, is so obscure or doubtful as to require a resort to other tests than those already mentioned for a solution of the difficulty, much weight is due to the fact that from the adoption of the Revised Statutes, over twenty years ago, until this controversy arose, the same construction which we adopt has, as we believe, been acquiesced in by the people, and acted upon by that department of the government having official duties to discharge under the law in relation to the appropriation of public lands." 72 Ky. 106.

But it may be and is urged that Register v. Reid only held that more than one patent for 200 acres might be issued to the same person, and not that a patent for more than 200 acres mignt be so issued. This is true unless the second proposition follows from the first. And, indeed, it is hard to understand why, in the absence of an express prohibition, one patent for 400 acres might not be issued if two patents for 200 each could. If the state could sell and grant to Lockard 40,400 acres, there would seem to be no reason why this grant should not be clearly expressed in a single instrument. Why require 202 patents, with all the accompanying trouble, expense, and confusion? As Judge Pryor pointed out in his dissenting opinion in Register v. Reid, the more patents and the more descriptions, the greater the liability to interference and confusion. Accordingly, what Register v. Reid practically decided was that a person may obtain as many orders, not exceeding 200 acres each, as he cares to buy, and unite them in one patent by proper surveys. Evidently, Judge Pryor knew this would be the effect of the holding, for he says:

"While this case now before us only involves the right to enter an additional 200 acres of land, I am well aware from the argument and agreed facts that it is but a test case, and that there are those who have surveyed thousands of acres now clamoring at the register's door for patents."

The case of Breathitt Coal, Iron & Lumber Company v. Strong, supra, decided 26 years after Register v. Reid, shows plainly what the effect of the holding was. This case involved the validity of a patent to Stephen G. Reid, issued June 15, 1872, for 154,800 acres, which excluded 25,000 acres "of patented and otherwise appropriated land, which is deducted from the calculation." The outer boundary was described by courses and distances, but the excluded land was not. Counsel presented the objection urged in this case that the patent was for more than 200 acres, but the court, in an opinion by Judge Paynter, sustained the validity of the patent, stating that the only question which merited consideration was whether the patent was void by reason of the failure to describe the excluded boundaries, and, commenting on certain cases, held it was not. The court below explained the neglect to discuss the question before us by saying that the patent involved was the very patent which the register had been directed to issue in Register v. Reid, and that, therefore, the question as to the invalidity of the patent on the ground that it covered more than 200 acres was treated as res adjudicata. But obviously the question was not res adjudicata, for the additional patent demanded in that case was for only 200

Digitized by Google

acres, and, if the court treated it as not meriting consideration, it was because the court had in view not only the technical, but the real and practical, holding in Register v. Reid. The court knew that, as a result of that decision, patents had properly issued not only to Reid, but to many others, for tens of thousands of acres in Kentucky, each covering more than 200 acres.

Following the Breathitt Case came the case of West v. Chamberlain, supra, decided in October, 1900. The patent in this case covered many thousands of acres. It was claimed it was void for uncertainty, because there were in fact no surveys on which the patent was based. The court below overruled these objections, and was sustained by the Court of Appeals. It does not appear that the question in the case before us was either presented or considered, but the court must have been aware that the patent was for many times 200 acres. It is said, however, there was an act passed in 1868, which made this patent, granted in 1855, good. But if, under the general law, the patent was palpably bad, and a special act alone saved it, certainly the court would have referred, in its opinion, to the special act.

The next case is that of the American Association, Limited, v. Innis, supra, decided in 1901. The land involved was situate in Bell county, and was patented in October, 1871. Sixty-two patents, each for 200 acres, were issued to Innis. The court below sustained these patents. It was sought in the Court of Appeals to have them held void on the ground they had been obtained fraudulently because the entries of the orders and surveys were in the names of fictitious persons, and the assignments to Innis forged; also, because the tract covered by the 62 patents was surveyed by laying out a base line and platting the patented tracts on this line. Both these contentions were overruled, the court saying that Bell county was not complaining of any fraud in the transaction, and the appellants were in no position to complain. The decision in Register v. Reid was referred to as controlling, the court saying:

"However much we might be inclined to dissent from the views expressed in that opinion as an original proposition, it must be regarded as settled law, as vast pecuniary transactions have been made on the faith of it, and any departure therefrom would involve in ruin many innocent purchasers of vacant land taken up exactly as it was in that case and this one." 60 S. W. 391. 22 Ky. Law Rep. 1201.

In the case of Uhl v. Reynolds, Register, supra, the validity of the Cheever patent, issued June 14, 1872, for land in Clay county, was sustained. This patent, as appears in the dissenting opinion of Judge O'Rear, was for 200,000 acres. In sustaining it, the court said:

"In the brief filed by the very able counsel for appellee it is first contended that under the statute as it existed at the time this survey was made not more than 200 acres of land could be appropriated by a single individual, referring to section 3 of chapter 102 of the Revised Statutes, which was in force at the time this survey was made; and that for this reason the patent was against the public policy of the state and consequently void. In response to this contention it may be said that it was held in the case of the Register v. Reid, 9 Bush, 103, by this court, in construing this identical statute, that the same person could purchase and patent several orders of the county court, each for 200 acres or any less number; and, whilst this opinion has been more or less criticised by the profession, it has been uniformly followed by this court in

Digitized by Google

numerous subsequent decisions, and vast property rights have been acquired on the faith of it, and any departure therefrom at this late day would involve in ruin many innocent purchasers of vacant land taken up as it was in this case." 64 S. W. 499, 23 Ky. Law Rep. 761.

The court goes on to point out that the validity of the Cheever patent does not rest alone upon the construction of the statute in Register v. Reid, but is sustained by the acts approved March 9, 1872 (1 Acts 1871–72, p. 562, c. 487), and March 27, 1872 (1 Acts 1871–72, p. 74, c. 827), which we have referred to. There is a dissenting opinion in this case by Judge O'Rear, who begins by saying:

"It may be noted at the outset that the majority opinion finds no merit in the acts in question to uphold appellant's claim to 320 square miles and more of the public lands of this state. It rests solely on the fact that it is supposed previous decisions of this court have already settled the law involved in the case, and therefore it is but following the path heretofore made by the court that the result is reached."

He then examines the case of Register v. Reid, and points out that all that case authorized was the issue of more than one patent for 200 acres to the same person, and, taking up the acts of March 9 and 27, 1872, calls attention to the fact that they were passed while the case of Register v. Reid was pending, and before it was decided, and only authorized what Register v. Reid subsequently held, namely, that the same person might obtain more than one order for 200 acres, and have the same surveyed and patented. Neither authorized a warrant to be granted, nor a survey made, nor a patent issued for more than 200 acres. We are disposed to agree with Judge O'Rear's construction of these two acts. If the holding in Register v. Reid did not warrant a patent for more than 200 acres, these acts did not. Judge O'Rear concedes that under Register v. Reid and these acts Cheever was entitled to 1,000 patents of 200 acres each, provided he had entered and surveyed 1,000 separate tracts under his 1,000 orders; but he points out that what happened was this:

"In the first place, the land was never actually surveyed before the patent issued. One assuming to be a county surveyor (but who was not, and was not even a de facto officer), sitting in his office, by protraction upon a private map of the county, without marking a tree (merely adopting one marked for another line), platted one thousand 200-acre tracts upon an imaginary base line. Upon this proceeding Cheever obtained one patent for 200,000 acres." 64 S. W. 503. 23 Ky. Law Rep. 767.

Towards the close of his opinion the judge says:

"The majority opinion stakes its warrant upon the suggestion that it is the fixed law of this state since the date of Register v. Reid, supra, that patents such as the one herein upheld are valid." Page 769, 23 Ky. Law Rep., page 504. 64 S. W.

And he concludes with a strong assault upon the premises and the policy of the decision, ending by saying he is in favor of overruling it.

It is clear from a reading of the opinion and the dissenting opinion in this case that the question before us was considered and passed upon, and that the highest court of Kentucky held, following Register v. Reid and other cases, that a patent for 200,000 acres could be issued to a person holding orders covering that number of acres, although no actual surveys of the separate and distinct tracts were made. It will

Digitized by Google

not do to say that the decision turns upon the acts of March, 1872, and that the references to Register v. Reid were dicta. It is obvious that it was the holding of the court in Register v. Reid which was controlling. The dissenting judge showed his appreciation of this when he ended his opinion by asserting his readiness to join in overruling that case.

In Nickels v. Commonwealth, supra, a patent for 34,800 acres in Letcher county, issued May 16, 1873, was upheld. The patent was based on 174 warrants for 200 acres each. It was insisted there were no separate surveys of the several tracts, that only the entire boundary was surveyed, and a plat was made by running a base line and platting the land in blocks of 200 acres. The court, sustaining the patent, said:

"The arguments that are so earnestly pressed upon us by appellee's distinguished counsel and elaborated in the dissenting opinion of Judge O'Rear in the case of Uhl v. Reynolds were forcibly stated by Judge Pryor in his dissenting opinion in Register v. Reid, 72 Ky. 103, and for us now to take this view, and hold a patent issuing for more than two hundred acres to be void, would be for us now substantially to adopt the rule urged by Judge Pryor in that dissenting opinion, notwithstanding the fact that this court has sustained numbers of patents under this statute, similar to the one before us, on the authority of the majority opinion in that case. There is no provision of law inhibiting the inclusion of several surveys in one patent. It being settled that one person might at the same time make two surveys, each of two hundred acres or more, at his election, the land office issued patents upon these surveys including in one grant as many surveys as were desired at the request of the patentee. When there was no statute forbidding this, and such patents have time and again been recognized by this court, after large sums of money have been invested on the faith of this practice of the land office and these decisions of this court, it would be, in our judgment, a departure from well-settled legal principles for us now to declare such patents invalid." 64 S. W. 449, 23 Ky. Law Rep. 780.

Judge O'Rear dissented on the grounds given in Uhl v. Reynolds, Register, and, in addition, called attention to the fact that there never was an actual survey of the land embraced in the patent, and never an entry of the respective warrants for 200 acres.

It is stated that counsel for the appellees in the case before us filed a petition in the Court of Appeals of Kentucky for a modification of the opinions in the Uhl and Nickels Cases, calling attention to the case at bar, then pending in the lower court, stating the validity of the Lockard patent depended solely upon the meaning of the Revised Statutes, there being no special act applying to Harlan county, and asked the modification on the ground that, if the opinions were adhered to, they would conclude the questions raised in the Lockard case. But the court adhered to its statement that there was no provision of law inhibiting the inclusion of several surveys in one patent, and that in issuing a patent covering as many surveys as were obtained the land office but followed a practice supported by the rulings of the Supreme Court of the United States in Polk's Lessee v. Wendal, 9 Cranch, 87, 3 L. Ed. 665, and Smelting Co. v. Kemp, 104 U. S. 648, 26 L. Ed. 875. Whatever view we might be disposed to take of the proper interpretation of this act, with respect to the matter involved in this case, if it were before us as an original question, our examination of the foregoing cases decided by the Court of Appeals of Kentucky constrains us to the conclusion that that court, in the exercise of its rightful authority, has

Digitized by Google

settled its construction, and settled it in favor of the validity of the patent before us.

The judgment of the lower court is therefore reversed, and the case remanded for further proceedings not inconsistent with this opinion.

(131 Fed. 696.)

TENNESSEE OIL, GAS & MINERAL CO. v. BROWN et al.

(Circuit Court of Appeals, Sixth Circuit. July 15, 1904.)

No. 1,295.

1. MINES AND MINING — CONTRACT—CONSTRUCTION—TERMINATION—ABANDONMENT.

A landowner, in consideration of one dollar, "as well as the agreements hereinafter mentioned," bargained, sold, and conveyed to plaintiff's assignor, his heirs and assigns, all the mineral, coal, iron ore, ore and potter's clay, and other minerals, etc., and all timber suitable for lumber on a certain farm described. The agreement required the grantee "to enter upon the land and make search for coal and other minerals," and, if they were found in such quantities as to justify him to work the same, then he was to pay $10 per annum after the completion of a certain railroad, and on request, until mining was commenced or during the continuance of the agreement, "to apply on the payment of rent of coal, iron ore, or other minerals, or oil first mined thereafter." There was no provision as to how long the agreement should continue, nor any stipulation as to when the grantee should commence to mine, or how long he should continue. *Held*, that such agreement did not constitute a conveyance of the minerals, timber, etc., to the grantee in fee, but constituted a mining lease, requiring the grantee to search for ores, etc., within a reasonable time.

2. SAME—EXPLORATION FOR MINERALS—EXTENT.

Where a mining lease required the grantee to make a search for minerals on the land within a reasonable time as a condition precedent to the right to take minerals discovered on the terms of payment specified, the duty of exploration included a search for all of the minerals named in the lease which might reasonably be expected to be found in the land, considering known geological conditions, to such an extent as would not only determine the presence or absence of minerals, but their commercial value, considering their abundance and accessibility.

3. SAME—ABANDONMENT.

Where a mining lease required the grantee to search for minerals within a reasonable time as a condition precedent to his right to take minerals from the land under the lease, his failure to make any search or examination, except a mere superficial one, of which the grantor had no notice, for a period of 15 years, entitled the lessor to treat the lease as abandoned.

4. SAME—TERMINATION—ELECTION.

Where a mining lease provided that the grantee might terminate the same at his election, the lease was terminable at the will of either party.

Appeal from the Circuit Court of the United States for the Eastern District of Tennessee.

This is a bill to remove a cloud from the title to a tract of mineral land situated in Scott county, Tenn. The land in question is wild mountain land, situated in the Cumberland Mountains, and has little or no value, save for its timber and minerals. The plaintiffs are in possession and claim title in fee through conveyance made by one Richard Slaven, under whom the defendants also claim the mineral interest in said lands. The alleged cloud consists in a

Digitized by Google

prior conveyance or agreement of lease or license made by said Richard Slaven to one Geo. W. Colbert under whom defendants claim the mineral and timber interests in said land. This instrument is in these words:

"The said party of the first part, for the consideration of one dollar, to him in hand paid, the receipt of which is hereby acknowledged, as well as the agreements hereinafter mentioned does hereby bargain, sell, and convey unto the party of the second part, his heirs and assigns, all the mineral, coal, iron ore, ore and potter's clay, and other minerals, and all rock or petroleum oil and salines, and all timber suitable for lumber, in, upon, or under the farm or tract of land in the district of No. 1st, in the county of Scott, in the said state of Tennessee, bounded and described as follows: * * * Granting to the party of the second part, or his assigns, the exclusive right to enter upon said lands at any time hereafter, and search for coal, iron ore, and all other minerals, oils, and salines, and, when found, to remove the same from said lands, together with all rights and privileges incident to the mining and securing said coal, iron ore, clay, and other minerals, oils, and salines, including the right of ingress and egress. And the party of the second part agrees to enter upon and make search for coal and other minerals in said lands above described; and should he find coal, iron ore, or other minerals, or oils, or salines, in said lands and adjoining lands, of sufficient thickness, quantity, and quality to justify him, the party of the second part, to open and work said mines, or oils, or salines, then he, or his representatives or assigns, shall pay to the party of the first part, his heirs or assigns, within five years after the completion of a railroad, built in connection with any leading railroad by which said minerals or oil can be taken to any large markets, the sum of ten (10) dollars a year, until mining is commenced upon said premises, or during the continuance of this agreement; and the failure to make these advance payments yearly upon request, shall be deemed an abandonment of this agreement, but not to the injury of the party of the second part, or his assigns. And the party of the second part shall have the right to abandon said lands and mining at any time and remove all his buildings and fixtures from said lands. And the said party of the second part, by himself or assigns, agrees to pay to the party of the first part, his legal representatives or assigns, the sum of ten (10) cents for each ton of (2,240 pounds) of screened coal, iron ore, or other minerals mined and removed from said lands herein described; and the price shall be ten (10) cents per 1,000 feet of sawed lumber; and the price or rent for rock or petroleum oil and salines shall be one-twentieth of the net proceeds. But it is understood and agreed that any advance payments of ten (10) dollars as before mentioned to be paid yearly, that shall be made to the party of the first part, are to apply on the payment of rent of coal, iron ore, or other minerals or oil first mined thereafter. The payment of rent per ton on coal, iron ore, other minerals, clays, oils, and salines, mined and removed, shall be made half-yearly, and all payments required by this agreement shall be made and accepted in bankable funds of the state of Tennessee. It is mutually understood by the parties that the coal, clay, and ore under any dwelling house or other permanent buildings upon the premises shall not be mined out, and as little injury to the surface of said land shall be done as possible, in the mining, removal, and transportation of said coal, clay, and ore, as herein contemplated. It is also mutually understood that the stipulations herein contained shall apply to and bind the heirs, executors, administrators, and assigns of the parties, respectively. In witness whereof, the parties hereunto set their hands and seals the day and year first above written."

Upon the pleadings and evidence, the prayer of the bill was granted, and a cancellation of the instrument above set out decreed.

H. H. Ingersoll and Wm. Wisner White, for appellant.

E. G. Foster, C. E. Lucky, Edward T. Sanford, and J. A. Fowler, for appellees.

Before LURTON, SEVERENS, and RICHARDS, Circuit Judges.

LURTON, Circuit Judge, after making the foregoing statement of the case, delivered the opinion of the court.

The contention of the appellant company is that the agreement be-

Digitized by Google

tween Richard Slaven and Geo. W. Colbert, set out in the statement of the case, is a deed of conveyance of the minerals in the land and of the timber thereon, which operated to vest a fee in the minerals and timber, subject to defeasance only upon breach of the agreement to pay $10, upon request, annually, after the completion of the railroad referred to. This construction is based upon the insistence that the terms "bargain, sell, and convey," found in the first clause of the instrument, necessarily characterize it as a conveyance of the timber upon and the minerals under the surface of the land of Slaven. Prima facie this may be true. But before we give these words this construction we must look into the four corners of the agreement and give effect to the whole of the contract. The Cincinnati Southern Railroad was in prospect when this contract was made, and was constructed to a point within nine miles of this property within five years after this contract. But no railroad has been built connecting that railway with this property, and appellants say that they are not under covenant, implied or express, to construct such connecting road. Without such road they say the coal under this land cannot be profitably mined or the timber converted into lumber, and that, having the title to the coal and timber, and the title to any other minerals which may yet be found, they are under no obligation to mine the coal or other minerals, or cut down the timber, until it can be done to their advantage, and that they may hold this estate until such time as it suits them to remove the minerals or oil or timber, and that neither Slaven nor his subsequent lessees can complain because the instrument contains no agreement, express or implied, obligating them to begin or continue mining, if they should choose to begin. Though they have done nothing, and paid only the nominal consideration of $1 under this deed, they justify this nonaction for 25 years by the insistence that one may do as he will with his own, in the absence of a contract to do a particular thing, and that, not having agreed to mine the minerals upon said land, they are within their right in biding their time, and that, if they shall deem it advantageous to ever commence mining, they are under no covenant, implied or express, to mine any definite quantity, or continually, or until the mineral is exhausted, but may, if they see fit, "abandon said lands and mining at any time, and remove all buildings and fixtures," having reserved the right to terminate the estate vested at will.

The logic of the situation compels the learned solicitor for the appellants to take up this extreme ground, for otherwise their utter failure to do any valuable thing in pursuance of the agreement after the lapse of 25 years would be unaccountable. If in all the time past they have had the right to stand upon their claim to be the owners absolutely of the mineral interests thus severed, in law, from the land, and to refuse to develop and operate that interest, because that is the right of an owner of the fee, the same right to hold onto this estate for the next century is undeniable. That they may be required to pay $10 annually if a railroad shall ever be constructed from the Cincinnati Southern to this land they concede. But this concession is possibly inadvertent; for, although one clause of the agreement does provide for such a payment until mining commences, and that the failure to make these advance payments yearly upon request shall be deemed an abandonment

Digitized by Google

of this agreement, it is added, "but not to the injury of the party of the second part or his assigns." If it is true that the appellants have for $1 acquired the right to prevent Slaven or his assigns from using, exploiting, or mining the mineral interests upon or under his own land, and can at no time be required to convert the timber into lumber, or to open and operate the very valuable vein of coal now known to underlie its surface, to say nothing of the possibilities of iron ore, coal oil, and other minerals, the contract is one of the most unreasonable and one-sided which any court has ever been called upon to uphold. But this $1 was not the real consideration moving to Slaven, for the recital of the contract is that the consideration is one dollar in hand paid, "as well as the agreements hereinafter mentioned." Now, what are these agreements referred to? for before we may conclude that this is an out and out conveyance in præsenti of the timber and mineral interests owned by Slaven, we must scrutinize the agreements which constitute the real consideration, for in the "agreements" we are most likely to find the purpose, intent, and meaning of the instrument regarded as a whole.

First. We find that Colbert agrees "to enter upon said land and make search for coal and other minerals." Why shall he agree to do this, if already he is the fee-simple owner of the minerals that may be hidden there? Second. If he finds such minerals, what then? The agreement provides that, if they are found in such quantity and quality as to "justify him, * * * to open and work same, * * * then" he shall pay $10 per annum, after the completion of the railroad mentioned, and upon request, "until mining is commenced, or during the continuance of this agreement." But how long is this "agreement" to continue? There is no stipulation that he shall ever commence to mine, or, if he does, that he shall continue for one day, one year, or until the minerals developed by the "search" he agreed to make shall be exhausted. Upon the contrary, it is expressly provided that "he shall have the right to abandon said lands and mining at any time, and remove all his buildings from said lands." If we should concede that the technical effect of the words of bargain, sale, and conveyance found in the document was to vest in Colbert title to the mineral and timber interests referred to, without regard to the requirement that he should "enter upon and search for minerals" and should pay the stipulated rent of $10 only when his search shall satisfy him that the interests referred to existed in quantity and quality sufficient to "justify him * * * to open and work them," we could not reconcile the claim that this was a deed of conveyance passing the title, with this clause giving to him the right to abandon a fee in this "nether estate" at his will.

The divestiture of a vested legal title by "abandonment" is unknown at the common law, unless it result from some estoppel or adverse possession under a statute of limitations. 1 Cyc. Law, 6; East Tenn. Iron & Coal Co. v. Wiggin, 68 Fed. 446, 15 C. C. A. 510; Calloway v. Sanford (Tenn. Ch. App.) 35 S. W. 778. Manifestly this agreement obligated Colbert "to enter upon and make search for coal and other minerals." In the absence of a stipulation, he was bound to do this within a reasonable time. If this search developed nothing, the agreement was at an end. The payment of the stipulated sum of $10 per annum is

Digitized by Google

"to apply on the payment of rent of coal, iron ore, or other minerals or oil, first mined thereafter." Thus the parties regarded this annual payment as an advance rent payment, to continue "until mining is commenced, * * * or during the continuance of this agreement." This payment of rent is also contingent upon another matter, and that is the construction of a railroad. The payment of rent is to be made on request, "within five years after the completion of a railroad in connection with any leading railroad by which said minerals or oils can be taken to any large market." The annual payments provided for after mining should begin are called or described as "rents," a term characterizing the agreement as a lease or license, rather than as conveyance of the mineral interests.

These considerations lead us to the conclusion that the presence of words of conveyance are not sufficient to require us to hold that the effect of the instrument was to vest in Colbert the title to the timber or mineral interests in this land. The ruling intention, as ascertained from all parts of the agreement, should be given effect. It is difficult to believe that it was intended that title should pass until these minerals had been removed and as they were removed. The consideration to be paid could not be ascertained until that contingency arrived, for no price in solido is mentioned. Whether any mining should ever be done or any price ever paid were both dependent upon future events. The contract was, therefore, for a lease dependent upon conditions. That the exploration for minerals should be made within a reasonable time is of the very essence of the agreement, and a condition precedent to the accruing of the right to take the minerals discovered upon the terms of payment indicated. The failure to make such exploration within a reasonable time, and to make it with such thoroughness and certainty as to determine the existence of mineral or oil, would be fatal to the continuance of the agreement. Upon this, we think, this lease depended as a condition precedent. The case falls within the principles applied by this court in the cases of Allegheny Coal Co. v. Snyder, 106 Fed. 764, 45 C. C. A. 604, and Logan Gas Co. v. Grt. Southern Gas Co. (C. C. A.) 126 Fed. 623,[1] and by the Supreme Court of Tennessee in Petroleum Co. v. Coal & Coke Co., 89 Tenn. 381, 18 S. W. 65. To the same effect are the cases of Steelsmith v. Gartlan, 45 W. Va. 27, 29 S. E. 978, 44 L. R. A. 107; Conrad v. Moorehead, 89 N. C. 31; Knight v. Coal & Iron Co., 47 Ind. 105, 17 Am. Rep. 692; Huggins v. Daley, 99 Fed. 606, 40 C. C. A. 12, 48 L. R. A. 320.

This duty of exploring for minerals meant for all of the minerals named which might reasonably be expected to be found, considering known geological conditions. The search actually made was not made until 1888 or later, a period of 15 years after the date of the agreement, a delay beyond all reason. When made, it was extremely superficial and valueless from any reasonable view. Coal exposed by washes on side of the mountain was observed, but the depth of the vein, the surface underlain, and character of the coal are as unknown today as upon the day of the lease. No effort seems to have been made to discover iron or coal oil. This kind of an investigation was delusive. The search was a purely nominal one, and not a faithful effort to comply with the

[1] 61 C. C. A. 359.

Digitized by Google

agreement. The Supreme Court of Tennessee, in the case cited above, said of such a requirement in a mining lease:

"The 'testing' should be so thoroughly done as to determine, not only the presence of such minerals, but their commercial value, considering their abundance and accessibility. The information resulting should be such as a prudent and experienced investor would desire to know before expending his capital in the digging of shafts or the erection of machinery proper for the profitable working of such a mine."

Slaven was never notified of even the superficial search made, nor that the lessee proposed to hold on and comply with the terms of the lease. No rent was paid or demanded. No taxes were paid. Not $1 was ever expended in endeavoring to make the lease productive to the lessor. In this situation of things Slaven clearly expressed his intention to avoid the agreement by making a new lease in 1890 to the appellees. Logan Gas Co. v. Grt. Southern Gas Co. (C. C. A.) 126 Fed. 623, 626, 61 C. C. A. 359; Guffy v. Hukill, 34 W. Va. 49, 11 S. E. 754, 8 L. R. A. 759, 26 Am. St. Rep. 901; Huggins v. Daley, 99 Fed. 606, 40 C. C. A. 12, 48 L. R. A. 320.

But, independently of any other ground, the general provision of this lease, authorizing the lessee to abandon whenever he should see fit, makes it a lease at the will of the lessee. An estate terminable at the will of one of the parties is determinable at the will of either, though it purports to be terminable at the will of one only. 1 Washburn, Real Property, 371 (side paging); Taylor's Landlord & Tenant, § 14; 18 Am. & Eng. Ency. of Law (2d Ed.) 182.

The decree of the court below is accordingly affirmed.

Following will be found the opinion of the court below:

CLARK, District Judge. For the purpose of determining the questions raised in this case, it is not regarded as important to characterize the instrument, the construction of which is involved, as either a lease or conveyance. It might be called either, and it would not substantially change the rights of these parties. It hardly is to be doubted that the paper operates as a severance of the mineral and surface rights in the tract of land embraced in the lease upon certain conditions, expressed and implied, and it certainly had the effect to vest in the party of the second part, to use the very language of the paper:

"The exclusive right to enter upon said lands at any time hereafter, and search for coal, iron ore, and all other minerals, oils, and salines, and, when found, to remove the same from said lands, together with all rights and privileges incident to the mining and securing said coal, iron ore, clay, and other minerals, oils, and salines, including the right of ingress and egress."

And it at the same time imposed upon that party the obligation:

"To enter upon and make search for coal and other minerals in said lands above described, and, should he find coal, iron ore, or other minerals, or oil, or salines, in said lands and adjoining lands, of sufficient thickness, quantity, and quality to justify him, the party of the second part, to open and work said mines, or oils, or salines, then he, or his representatives or assigns, shall pay to the party of the first part, his heirs or assigns, within five (5) years after the completion of a railroad built in connection with any leading railroad by which said minerals or oils can be taken to any large markets, the sum of ten (10) dollars a year, until mining is commenced upon said premises, or during the continuance of this agreement; and the failure to make these

Digitized by Google

advanced payments yearly upon request shall be deemed an abandonment of this agreement, but not to the injury of the party of the second part or his assigns."

An instrument like this, as is true of all instruments, must receive a reasonable interpretation, which would give effect to the plain intention of the parties, and not one which would defeat the intention of the parties. The instrument should be so construed as to confer substantial rights on the bargainee, and to furnish a substantial and valuable consideration to the bargainor. It should not be given such an interpretation as would render the paper wanting in mutual obligation, or such as would reduce it to a mere nudum pactum, as declared by Judge Lurton in the case of Petroleum Company v. Coal, Coke & Mfg. Co., 89 Tenn. 381, 18 S. W. 65. The construction must be given in the light of the surrounding circumstances which constituted the situation in which the parties were standing at the time the agreement was made, and such an interpretation must be given as will make the instrument consistent with the view that it is one which a reasonably sensible and intelligent man would have entered into, under the circumstances, and in the light of the situation in which the agreement was made and executed. According to the contention of the defendant, now, at the expiration of 30 years, the instrument is still in full force and effect, conferring upon the bargainee the right, indefinite as to time, which was vested by the agreement when first executed. As the bargainee's contention is, the bargainee now, at the end of 30 years, is vested with the same rights which it possessed when this contract was executed in February, 1873. If at any time in the indefinite future a railroad shall be built sufficiently close by the property to meet the views of the bargainee as to the conditions under which the property can be economically and profitably tested and operated, then for the first time an obligation will rest on it, under the contract, to proceed to test and to operate, or to give notice and abandon. All the right which the bargainors, or their assignees, possess, is to wait and to see whether, during the lifetime of this or any succeeding generation, conditions may arise which will cause the contract to commence yielding to the bargainors, or to the plaintiffs as assignees, a substantial consideration, or a royalty on mining operations, as contemplated when the contract was first entered into.

It is perfectly plain that, if this view can be sustained, it will be equally sound after the lapse of another period of 30 years, or 60 or 90 years. Under such a view clearly the bargainors, or assignees, could receive no benefit during their natural life, and it would be very probable, certainly very possible, that no benefit would accrue within a period of 100 years. It seems to me too plainly evident to admit of serious denial that an interpretation which makes such results possible cannot be sound. It is a construction which in all practical effect, for all practical purposes, implies no legal obligations upon the bargainee, or lessee, to explore, or discover, and to work the mines. It furnishes no substantial consideration to the bargainors, as contemplated by the contract, in the way of royalty on mining operations, and such a construction would convert the instrument into a mere voluntary option on the part of the bargainee to take advantage of this contract, if at

Digitized by Google

any indefinite time in the future the conditions of that locality make it to its interest to do so. There would, under such a view, be manifestly a gross want of mutuality in the agreement. On the contrary, if the agreement is to be construed as requiring the bargainee within a reasonable time to explore the land, and in the event minerals are found to diligently work the same, and in that way bring to the bargainors a share in the profits of mining operations, the agreement may be regarded as imposing mutual obligations, and as furnishing mutual considerations to support it, but otherwise not. This is the clear doctrine of the case just referred to, which in this respect is in full harmony with the cases of Huggins v. Daley, 99 Fed. 606, 40 C. C. A. 12, 48 L. R. A. 320; Crawford v. Ritchey, 43 W. Va. 252, 27 S. E. 220, and Barnsdall v. Boley (C. C.) 119 Fed. 191.

Now it is in evidence that, at the time the original contract or agreement was made in 1873, the construction of what is now known as the Cincinnati Southern Railway, between Cincinnati, in the state of Ohio, and Chattanooga, in the state of Tennessee, was proposed, and it has in fact since been constructed. There is no doubt that this is one of the circumstances or conditions under which this contract was made, and that under a fair construction of the contract it must be held that this is the railroad referred to in the contract, after the completion of which, and within five years, the full obligations of the contract on the part of the bargainee were in force, and required action on the part of the bargainee, as contemplated by the contract taken as a whole, and such action as would in good faith carry out the clearly implied obligation to proceed; for as was said in Huggins v. Daley:

> "There is always an implied, if not an expressed, covenant, for diligent search and operation."

If this be not the true construction, when will there ever be a railroad completed that will put into active operation the obligations resting on the bargainee under such an agreement? It is not to be doubted that leases similar to this have been taken upon bodies of land on either side of the great railway then proposed, and that the number of such leases and tracts of land may run into the hundreds. In the very nature of things, it is certain that there is no probability, or possibility, that third parties constructing railways will ever build them across, or so close to, these tracts of land as to relieve the bargainees of any expenditure or effort on their part to secure lateral or switch tracts reaching mineral property. If the output in mining operations would probably be so great as to induce a railway to build a branch line to any particular tract or tracts of land, this would only result after adequate exploration and development on the part of the bargainee under such a contract, and a showing to some through line of railway that the additional transportation business to be obtained in that way would justify the construction of a branch or spur track to the property thus explored, and which could be profitably operated; but according to the contention of the bargainee the bargainee has at no time been under any obligation to do anything of this kind, but is allowed to stand by and wait until the improbable condition shall arise when a railroad shall be built either on or so close to the tract of land as to require no effort and no expenditure on the part of the bargainee, and in this way the bargainee

Digitized by Google

is left to take all the speculative chances of the future, with the certainty that the bargainor has completely deprived himself of the power to render his property valuable for productive purposes. It is only necessary to state such a case, with adequate reflection on the grossly inequitable result, to force fair acknowledgment that such an interpretation is utterly unsound. Under this contract both parties took the chance that a railway connecting with the markets of the country would be constructed in the neighborhood of this property, and that when this was done the property would be diligently explored, and if found to justify mining operations, in view of the railroad thus built, whether five or ten miles from the property, or nearer, such mining operations were required to be commenced, and if diligent search for mineral deposits, with the proper test, disclosed that mining operations could not then be conducted profitably, it was an obligation on the part of the bargainee to abandon the enterprise under the contract, surrendering his rights under this agreement, and to notify the bargainor accordingly, and a clearly implied obligation or covenant required it to do this within a reasonable time, in all respects, where the time is not fixed by the written agreement.

In determining whether the property could be profitably developed and mining operations carried on, it was a part of the obligation and the concern of the bargainee to determine in that connection, and as a part of that question, whether such operations could be carried on by procuring or by building a lateral or branch railroad, or, failing in that, by wagon or animal transportation, from this property to the railroad thus completed. But it is clearly not a permissible construction of the contract to say that the bargainee may stand idle, and take no step whatever, and insist that it is not required to take any such step, until and when, if ever that shall happen, a railroad shall by chance be built upon, through, or on a line adjoining the property. What is thus said seems to indicate sufficiently the course of reasoning which I regard as applicable to this case, and by which it is apparent that I reach the conclusion that there has been here a forfeiture and abandonment of the rights conferred upon the bargainee by the agreement in question, by nonuser and by a total failure to comply with the clearly implied covenant requiring diligent exploration and operation on the part of the bargainee; and upon the authority of the cases before referred to I conclude that the bargainor is entitled to the relief sought, and it is so decreed.

This view seems to render it unnecessary that I should consider or decide other points raised in the pleadings and discussed in the arguments at bar.

Digitized by Google

(130 Fed. 334.)

MOSLE et al. v. BIDWELL.

(Circuit Court of Appeals, Second Circuit. April 25, 1904.)

No. 92.

1. CONSTRUCTION—LEGISLATIVE INTENT—METHOD OF ASCERTAINMENT.

Though, in construing a law, a court may not, in order to reach a conclusion as to legislative intent, inquire what individual members of Congress supposed a bill to mean, or what they intended to accomplish by their votes, it may consult the history of the act and the reports of committees having it in charge.

2. SAME—STATUTES IN PARI MATERIA—SUBSEQUENT LEGISLATION.

On appeal from a decision construing section 20, Customs Administrative Act June 10, 1890 (chapter 407, 26 Stat. 140 [U. S. Comp. St. 1901, p. 1950]), it appeared that Congress, in consequence of the apprehended results of said decision, had, in the act of December 15, 1902, c. 1, 32 Stat. 753 [U. S. Comp. St. Supp. 1903, p. 255], enacted an amendment, which, as reported to the House of Representatives by the committee having the bill in charge, was intended to "confine the language of the section [20] to the primary meaning and intent of the law." *Held*, that the latter statute should in this case be taken as declaratory of the meaning of the earlier one, and that said section should be construed to have had the effect given by the amendment.

3. CUSTOMS DUTIES—MERCHANDISE WITHDRAWN FROM WAREHOUSE—RATE OF DUTY APPLICABLE.

The provision in section 20, Customs Administrative Act June 10, 1890, (chapter 407, 26 Stat. 140 [U. S. Comp. St. 1901, p. 1950]), that merchandise in bonded warehouses may be withdrawn for consumption "on payment of the duties and charges to which it may be subject by law at the time of said withdrawal," means such payment as the merchandise would be subject to if imported at the time of withdrawal.

In Error to the Circuit Court of the United States for the Southern District of New York.

Note U. S. v. Benzon, 24 Fed. Cas. 1112; Merritt v. Cameron, 137 U. S. 542, 11 Sup. Ct. 174, 34 L. Ed. 772. For decision below, see 119 Fed. 480.

This cause comes here upon writ of error to review a judgment of the Circuit Court in favor of defendant in error, who was defendant below, sustaining a demurrer to the complaint. The action was to recover from the collector of the port of New York certain duties collected upon sugars imported from the island of Porto Rico.

John G. Carlisle, for plaintiffs in error.

Chas. Duane Baker, for defendant in error.

Argued before LACOMBE, TOWNSEND, and COXE, Circuit Judges.

PER CURIAM. The sugars were imported and stored in bonded warehouse on April 4, 1899. The tariff act of July 24, 1897, c. 11, schedule E, 30 Stat. 168 [U. S. Comp. St. 1901, p. 1647], imposed duties on sugars, and there has been no change in that schedule down

¶ 1. See Statutes, vol. 44, Cent. Dig. §§ 292, 293, 299.

See note at end of case

Digitized by Google

to the time when the collector exacted duties on this importation. On April 11, 1899, by exchange of ratifications, the treaty of peace between the United States and Spain (30 Stat. 1754), ceding the island of Porto Rico to the United States, became effective. The Supreme Court has held in De Lima v. Bidwell, 182 U. S. 1, 21 Sup. Ct. 743, 45 L. Ed. 1041, that merchandise brought from Porto Rico to the United States after the ratification of that treaty, and until the enactment of the Foraker act, was not subject, by the law in force during that period, to any import duty whatsoever. On May 6, 1899, the sugar in question was withdrawn from bond for consumption, and duties were liquidated and paid May 17, 1899, at the rate prescribed in the tariff act of 1897. The importers protested, claiming that it might be withdrawn from bond free of duty. They relied on section 20 of the customs administrative act of June 10, 1890 (chapter 407, 26 Stat. 140 [U. S. Comp. St. 1901, p. 1950]), which reads:

"Sec. 20. That any merchandise deposited in bond in any public or private bonded warehouse may be withdrawn for consumption within three years from the date of original importation, on payment of the duties and charges to which it may be subject by law at the time of such withdrawal: provided, that nothing herein shall affect or impair existing provisions of law in regard to the disposal of perishable or explosive articles."

The plaintiffs contended that the phrase "duties to which it may be subject by law at the time of withdrawal" should be construed to mean "duties no greater nor different than other like goods imported at the time of withdrawal would be subject to." The court held that the goods were subject to duty in the amount exacted of the plaintiffs when they were deposited in bond; that they remained so in the absence of any treaty or statute relieving them from duty; and that neither the treaty nor any statute passed subsequently to the one imposing the duty has impaired or affected the right to collect it.

We need not discuss the several arguments which have been advanced in criticism and in support of this decision. No principle of statutory construction is better settled than the one which holds that the intention of the Legislature, when discovered, must prevail, any rule of construction declared by previous acts to the contrary notwithstanding. The following excerpts from U. S. v. Freeman, 3 How. 556, 11 L. Ed. 724, are apposite to the case at bar:

"A legislative act is to be interpreted according to the intention of the Legislature, apparent upon its face. * * * In doubtful cases a court should compare all parts of a statute and different statutes in pari materia to ascertain the intent of the Legislature. * * * If a thing contained in a subsequent statute be within the reason of a former statute, it shall be taken to be within the meaning of that statute; and, if it can be gathered from a subsequent statute in pari materia what meaning the Legislature attached to the words of a former statute, they will amount to a legislative declaration of its meaning, and will govern the construction of the first statute."

On December 15, 1902, Congress passed an act (chapter 1, 32 Stat. 753 [U. S. Comp. St. Supp. 1903, p. 255]) amending section 20 of the customs administrative act, quoted above, by inserting before the existing proviso an additional proviso, as follows:

Digitized by Google

"Provided, that the same rate of duty shall be collected thereon as may be imposed by law upon like articles of merchandise imported at the time of withdrawal."

Ordinarily, such an amendment might be taken as indicating an intention to make some change in the existing law, but, although we may not inquire as to what individual members supposed a bill to mean, or what they intended to accomplish by their votes, we may consult the history of the act itself, and the reports of committees having it in charge, in order to reach a conclusion as to legislative intent. It appears that the bill was introduced in consequence of the apprehended results of the decision of the Circuit Court in the case at bar, and the committee of ways and means reported to the House on December 11, 1902, that "the bill simply endeavors to conform the language of the section to the primary meaning and intent of the law and to accord with the custom and ruling of the Treasury Department." Under the rule laid down in U. S. v. Freeman, supra, the later statute may be taken as declaratory of the meaning of the earlier one.

The judgment is reversed, and cause remanded for a new trial.

COXE, Circuit Judge, concurs in result.

NOTE.

History and Passage of Statutes and Contemporary Circumstances as Aids to Construction.

I. In General.

[a] Where a statute is ambiguous and uncertain in meaning, the legislative history may be inquired into in its construction.

—(Ind. 1886) Stout v. Grant County Com'rs, 107 Ind. 343, 8 N. E. 222;
(Wash. 1903) Scouten v. City of Whatcom, 74 Pac. 389, 33 Wash. 273.

[b] (U. S. 1896) In construing a statute, especially when, like the interstate commerce law, it is in the nature of experimental legislation, the courts must take notice of the history of the legislation, and, out of possible different constructions, select and apply the one that best comports with the genius of our institutions, and which, therefore, is most likely to have been the construction intended by the law-making power.—Texas & P. Ry. Co. v. Interstate Commerce Commission, 162 U. S. 197, 16 Sup. Ct. 666, 40 L. Ed. 940.

[c] (Ala. 1890) Amendments offered to a bill during its passage, but which were not finally incorporated in the statute as passed, cannot be considered in interpreting the statute.—Lane v. Kolb, 92 Ala. 636, 9 South. 873.

[d] (Ark. 1844) In the construction of a doubtful statute the history of the enactment as furnished by rolls and journals is the best evidence as to its meaning.—Hill's Adm'rs v. Mitchell, 5 Ark. (5 Pike) 608.

[e] (Ind. 1880) Where a statute is susceptible of several constructions, the Supreme Court may examine the journals of the Senate and House of Representatives to determine the history of the act and ascertain the will and intention of the Legislature.—Edger v. Randolph County Com'rs, 70 Ind. 331.

[f] (Ind. T. 1896) It being doubtful whether the proper construction of Const. Choctaw Nation, art. 8, § 18, providing that any citizen of the Nation who may find any mine shall have the exclusive right to work the same within one mile in any direction from where he commences work, would allow the discoverer of a coal mine the exclusive right to take all the coal within the prescribed radius though in another vein, the custom and usage of the Nation to allow him the exclusive right to take all such coal is admissible to show that that is the proper construction.—McCurtain v. Grady, 38 S. W. 65, 1 Ind. T. 107.

Digitized by Google

[g] (Ky. 1900) The courts will not inquire as to the influences which operated to procure the enactment of a statute.—City of Lebanon v. Creel, 59 S. W. 16, 22 Ky. Law Rep. 865.

[h] (Mo. 1902) In arriving at the intent of a given law, it is often imperative to examine the previous history of the law and the decisions construing it, in order to carry out the purpose of the amended enactment.—Grimes v. Reynolds, 68 S. W. 588, 94 Mo. App. 578.

[i] (Vt. 1847) The intention of the Legislature in enacting a statute can only be determined by the fair and natural import of its terms, with reference to the subject-matter, and without reference to any traditional history of the occasion of its enactment, unless that results from some known state of embarrassment under the former law.—Barker v. Esty, 19 Vt. 131.

[j] (Wis. 1862) The date of the approval of a law, and not the date of publication, is to be looked at, in determining the intent of the Legislature, so far as that intent depends on the priority of its action.—Mead v. Bagnall, 15 Wis. 156.

[k] (Wis. 1871) A report of the judiciary committee of the Senate, to whom the question of law arising under a statute was referred by resolution of that body, is proper, to be considered as part of the practical exposition which the statute has received, as showing the meaning of the law as understood by the Legislature itself.—Harrington v. Smith, 28 Wis. 43.

II. Debates and Opinions of Legislators.

[a] (U. S. 1897) The debates in Congress cannot be considered for the purpose of discovering the meaning of a statute.—United States v. Trans-Missouri Freight Ass'n, 17 Sup. Ct. 540, 166 U. S. 290, 41 L. Ed. 1007.

[b] (U. S. 1879) The statements of members of a legislative body in debate on the passage of a law may be resorted to to ascertain its general object, though not for the purpose of explaining the meaning of the terms used.—Ho Ah Kow v. Nunan, Fed. Cas. No. 6,546 [5 Sawy. 552].

[c] (U. S. 1889) In construing the meaning of a law the court may consider the statements of those who had charge of the act, as to the meaning and purpose of the act, made to the legislative body passing it.—Ex parte Farley (C. C.) 40 Fed. 66.

[d] (U. S. 1899) On questions of the construction of the bankruptcy act, opinions expressed by individual members of Congress in the debates on the passage of the act, as to the object and effect of its particular clauses, are entitled to little or no weight.—Carter v. Hobbs, 92 Fed. 594.

[e] (D. C. 1879) In ascertaining the meaning of an act of Congress, the remarks of members on its passage are too uncertain a source of guidance, and cannot be resorted to by the court for that purpose.—District of Columbia v. Washington Market Co., 3 MacArthur, 559.

[f] (Minn. 1865) The debates of a convention that framed a constitution cannot be referred to by the court in expounding it.—Taylor v. Taylor, 10 Minn. 107 (Gil. 81).

[g] (Nev. 1866) Where the language of a law is so ambiguous as not clearly to show the meaning intended to be conveyed, the debates in the Legislature may be resorted to to determine the meaning of the law.—Maynard v. Johnson, 2 Nev. 25.

[h] (Va. 1887) In construing a statute, the intention of the draughtsman, or of the individual members of the Legislature, who voted for it, are not to be taken into consideration.—City of Richmond v. Henrico County Sup'rs, 83 Va. 204, 2 S. E. 26.

III. Surrounding Circumstances, History of the Times, and Evils to be Remedied.

[a] (U. S.) In construing an act of Congress, the court may recur to the history of the times when the act was passed in order to ascertain the reason as well as the meaning of the particular provisions of it.—(1875) United States v. Union Pac. R. Co., 91 U. S. 72, 23 L. Ed. 224; (1893) Same v. Wilson (D. C.) 58 Fed. 768.

Digitized by Google

[b] (U. S. 1892) In construing a doubtful statute, the court will consider the evil which it was designed to remedy, and for this purpose will look into contemporaneous events, including the situation as it existed, and as it was pressed upon the attention of the legislative body, while the act was under consideration.—Holy Trinity Church v. United States, 143 U. S. 457, 12 Sup. Ct. 511, 36 L. Ed. 226.

[c] (U. S. 1834) The history and situation of the country will be recurred to, to ascertain the reason as well as the meaning of a statute, to enable the court to apply the rules of construction.—Baring v. Erdman, Fed. Cas. No. 981.

[d] (U. S. 1893) A court may recur, in the construction of a doubtful act of Congress, to the history of the times when the act was passed, and the general state of public and legislative opinion at the time.—United States v. Oregon & C. R. Co. (C. C.) 57 Fed. 426.

[e] (U. S. 1897) Courts, in construing statutes, may not recur to the views of members expressed in debate, or consider motives which influenced votes. But what was done by the entire body as the result of discussion must be looked to, and courts may take notice of circumstances outside of an act which tend to show its meaning, such as public records and documents, general and local history, and matters of public notoriety.—Pacific Coast S. S. Co. v. United States, 33 Ct. Cl. 36.

[f] (U. S. 1897) In construing a statute, it is proper for the court to consider the circumstances under which, and the history of the times when, it was passed.—Dunlap v. United States, 33 Ct. Cl. 135.

[g] (U. S. 1901) In cases of doubtful construction it is safe guidance for a court to look into the conditions surrounding the subject-matter of the legislation at the time the act was passed; but if the words employed are unambiguous, and not made doubtful by the subject-matter to which they are to be applied, courts must give full effect to the language used.—Clark v. United States, 37 Ct. Cl. 60; Pierson v. Same, Id.

[h] (La. 1878) In the interpretation of a law, the motive of the lawmaker and the meaning and scope of the law may be sought for in contemporaneous history, in the discussions attendant on the progress of the legislation, and in subsequent legislation on the same or on cognate matters.—State ex rel. New Orleans Pac. Ry. Co. v. Nicholls, 30 La. Ann. 980.

[i] (La. 1902) To discover the true meaning of a law, the cause which induced its enactment and the mischief which it seeks to remedy must be considered.—Richard v. Lazard, 32 South. 559, 108 La. 540.

[j] (N. J. 1866) The circumstances known to all the public as to what was the law at the time or what it was supposed to be may be considered in determining the legislative intention when not explicitly expressed.—Keyport & M. P. Steamboat Co. v. Farmers' Transp. Co., 18 N. J. Eq. (3 C. E. Green) 13.

[k] (N. Y. 1863) Where the object of a statute is the correction of an abuse, the intention of the Legislature, as gathered from contemporaneous circumstances, should govern its construction in cases of ambiguity.—Fairchild v. Gwynne, 16 Abb. Prac. 23.

[l] (N. Y. 1877) Colonial Acts Oct. 9, 1692, providing for satisfaction for the ground taken and employed for streets in New York, and payment to owners for their respective rights and interest in the same, must be construed with reference to the then existing title of the corporation in the other streets of the city, to which, as successors in interest of the Dutch government, they acquired title as owner in fee.—Story v. New York El. R. Co., 3 Abb. N. C. 478.

[m] (W. Va. 1901) Where the language of a statute is in any manner ambiguous, or the meaning doubtful, resort may be had to the surrounding circumstances, the history of the times, and the defect or mischief which the statute was intended to remedy.—Daniel v. Simms, 39 S. E. 690, 49 W. Va. 554.

[n] (Wis. 1903) The fact that great mischief will result from holding that Rev. St. § 943, requiring the question of the issuance of bonds by cities for waterworks to be submitted to a vote of the electors, is applicable to cities issuing bonds for such purpose, because many bonds have been issued without

Digitized by Google

such a vote, does not justify the court in overriding a plain statute, though, in a case of extreme doubt, such a consideration might have weight.—Appleton Waterworks Co. v. City of Appleton, 93 N. W. 262, 116 Wis. 363.

(182 Fed. 242.)

THE ELIZA LINES.

(Circuit Court of Appeals, First Circuit. January 28, 1904.)

Nos. 368-371.

1. ADMIRALTY—APPEAL—REVIEW.
   Where a computation made by a commissioner in admiralty contains a plain error, which was called to the attention of the court, it may be corrected in the appellate court, although no formal exception was taken on that ground to the commissioner's report.

2. SAME—INTEREST.
   The allowance of interest on an adjustment of conflicting claims in admiralty is discretionary with the court.

3. SAME—ERRONEOUS ORDER.
   One who acted as agent for a party in obtaining an erroneous judgment directing the sale of a cargo, but who was not a party to the record, and had no personal interest in the suit, cannot be held liable in damages as a tort feasor on account of the sale.

On Rehearing. For former opinion, see 114 Fed. 307, 52 C. C. A. 195.

Before COLT, Circuit Judge, and ALDRICH and BROWN, District Judges.

PER CURIAM. Upon a rehearing of certain points in this case, we find that there is substantial error in the decree of the Circuit Court, due to an erroneous step in the computation of the amount of liability of Ward & Co. In making up this amount they were credited with the amount of freight's contribution to general average. This is clearly a credit to which they are not entitled in such computation. We repeat, however, the expression in our former opinion:

"It is by no means clear, however, that the preliminary opinion of the Circuit Court justified the commissioner's mode of computation in his first report, or that the alternative report is so clearly correct that we can now adopt it."

In discussing the question of waiver it was said in our former opinion that, if the parties had intended to rely upon objections to computations by the commissioner, the point should have been taken at least upon the hearing before the Circuit Court, and in that opinion we acted upon the assumption that the point was not taken there. Upon careful consideration of the arguments on rehearing it is now made clear that the point was urged before the Circuit Court, and we have reached the conclusion that it would be unjust to treat this question as waived by counsel. Aside from all questions of whether the error arose from the court's direction or from a misinterpretation of its directions by counsel or commissioner.

¶ 2. See Admiralty, vol. 1, Cent. Dig. § 603.

Digitized by Google

we think it sufficient to say that in the computations adopted there was an erroneous credit, a plain error, and that counsel were reasonably diligent in their efforts to have this error brought to the attention of the Circuit Court and corrected. That it was presented in the Circuit Court is stated upon the brief for Ward & Co. The error was also before the Circuit Court on the face of the computations of the commissioner's original report, and was amply explained by the commissioner's supplemental report. That it was not corrected as a plain error of accounts was possibly due to the multitude of other details presented to the Circuit Court prior to the entry of its decree. The amount involved is important, and we think that the liberal doctrine upon which this court proceeded in The Chattahoochee, 74 Fed. 899, 906, 21 C. C. A. 162, and in Cuddy v. Clement, 113 Fed. 454, 51 C. C. A. 288, is a sufficient ground for our intervention to cure this error, and that the rights of the parties should not be solely dependent on the application of strict rules of procedure.

For Ward & Co. it is contended that the error of the deduction of freight's contribution to general average from the total amount of Ward's liability has been substantially cured, for the reason that the decree of the Circuit Court is founded on the assumption that freight's contribution to general average was charged against Ward & Co. by being offset against items of credit; in other words, that errors of computation on one side were set off against errors of computation on the other side, and that a balance was struck, which the Circuit Court found, on the whole, reasonable and just. Upon a careful reading of the opinion of the Circuit Court, we find no indication that the item in question was thus used as an offset. On the contrary, by its specification of the general class of errors offset the opinion seems to negative this conclusion. We find nothing in the opinion that seems to us sufficient to cure the plain error of deducting freight's contribution to general average, and no calculations based upon the evidence or findings of the court are presented to support the contention that this item was in fact included in the balancing of errors.

We are further of the opinion that the Circuit Court did not err in crediting to Ward & Co. the proceeds of the cargo. The cargo was their property, and its proceeds were applied by the District and Circuit Courts to the payment of the different claims against them; and the amount was a just credit in the computation of the total amount of their pecuniary liability. To deny them credit for the item of $797.65 as expenses wrongfully thrown upon the cargo by procuring a sale would be entirely inconsistent with the general mode of computation for determining Ward & Co.'s liability adopted by the Circuit Court, and carried out by the commissioner.

We are further of the opinion that there was no error of the Circuit Court in its directions as to interest, or in its failure to allow interest. This matter rested in the discretion of the court below, and we find no reason to disturb its action. The Maggie J.

Digitized by Google

Smith, 123 U. S. 349, 356, 8 Sup. Ct. 159, 31 L. Ed. 175; The Albert Dumois, 177 U. S. 240, 255, 20 Sup. Ct. 595, 44 L. Ed. 751; Redfield v. Ystalyfera Iron Co., 110 U. S. 174, 3 Sup. Ct. 570, 28 L. Ed. 109.

The remaining question is as to the dismissal of Bradford Darrach from the cause as a party. By the final decree, judgment was given against him and his sureties for the full amount of his stipulation. We fail to find, in the briefs on rehearing, any specific reason why he should have been retained in the cause, or why the decree should run against him, as well as against the members of the firm of Ward & Co., except possibly the following: "It is not correct to say that he 'throughout appeared only as the agent of James E. Ward & Co.'" "Darrach acted throughout as the agent who enabled the wrongful acts of Ward & Co. to be accomplished." "Darrach chose to act as the agent of Ward & Co., and he must stand the consequences." The general suggestion of possible, but unspecified, injuries which might result from his dismissal is too vague, and does not require us to make conjectures as to its specific meaning.

It is apparently suggested that Darrach should be retained as a party whose liability rests upon a tortious or wrongful act, but we think this theory of liability is not tenable. While the order for a sale made by the District Court was erroneous, the procuring of that order was not a tort, and Darrach's participation did not make him a tort feasor. There was an appeal in good faith to a judicial tribunal for the determination of legal rights. The reversal of its decision does not make the parties liable as tort feasors for procuring erroneous action.

"On the reversal of the judgment, the law raises an obligation in the party to the record, who has received the benefit of the erroneous judgment, to make restitution to the other party for what he has lost." Bank of United States v. Bank of Washington, 6 Pet. 8, 8 L. Ed. 299; Northwestern Fuel Co. v. Brock, 139 U. S. 216, 11 Sup. Ct. 523, 35 L. Ed. 151.

Save as a stipulator, we think that the Circuit Court was right in holding that he "throughout appeared only as the agent of James E. Ward & Co.," and in discharging him as a party. Darrach was not a party to the record who had received the benefit of an erroneous judgment. Upon principles of special contract, he was under no obligation other than that for which judgment has been given against him. Upon principles of tort, he is not liable, as he was not a tort feasor; and the obligation to make restitution arising under the doctrine of the cases cited is an obligation implied by law upon equitable principles. It is unnecessary to consider how far the principle that, upon the reversal of an erroneous judgment, there should be indemnity, would give rise to an obligation of an agent who represented an irresponsible principal, since the record raised no question of this character. The Circuit Court imposed the obligation where it ultimately belonged—upon Ward & Co.; and, consistently with the reasoning which led to that result, and in the absence of any apparent reason for further retain-

Digitized by Google

ing a party who had appeared merely on behalf of his principals, who had subsequently intervened, dismissed him and held the principals. We find no error here.

The case is remanded to the Circuit Court, with directions to that court to revise the amount of the judgment against James E. Ward & Co. by disallowing the personal credit to them of freight's contribution to general average, and to award against said James E. Ward & Co., in addition to the several sums already awarded against them in the decree of the Circuit Court, $1,525.43, the amount of said credit, together with interest thereon from May 12, 1899; 45 per cent. of which amount and interest is to be recovered by Catharine T. Black, administratrix, in behalf of herself and the other part owners of the schooner Edward E. Barrett, and the remaining 55 per cent. and interest is to be recovered by the Banque de Gênes and Hans Andreasen; said amount of 55 per cent. and interest, however, to be subject to the priorities, as between said Banque de Gênes and Hans Andreasen, already provided in the decree of the Circuit Court. In other respects the decree of the Circuit Court is affirmed; neither party to recover costs in this court.

(132 Fed. 245.)

O'CONNELL v. MASON et al.

(Circuit Court of Appeals, First Circuit. August 25, 1904.)

No. 519.

1. JUDGES—ACTION TO CHARGE WITH CIVIL LIABILITY.

Under the settled rule that judges of courts of general jurisdiction are not subject to civil actions by private suitors for their acts unless such acts are clearly outside the jurisdiction of the court in which they preside, a declaration does not state a cause of action, within the exception to such rule, by a mere general allegation that the acts complained of were not judicial acts, and were done without authority or jurisdiction, where the particular acts set out do not sustain such general allegation.

2. ACTION IN FORMA PAUPERIS—DISMISSAL—STATUTE CONSTRUED.

The provision of Act July 20, 1892, c. 209, § 4, 27 Stat. 252 [U. S. Comp. St. 1901, p. 707], authorizing the court to dismiss an action brought thereunder in forma pauperis if satisfied that the alleged cause of action is frivolous or malicious, applies to cases where the affidavit of poverty is filed simultaneously with the filing of the writ.

3. DISMISSAL—FRIVOLOUS ACTIONS—POWERS OF COURT.

Aside from any statutory authority, a court of general jurisdiction has power on its own motion to dismiss an action as frivolous where the pleadings present no cause of action recognized by the law.

In Error to the Circuit Court of the United States for the District of Massachusetts.

For opinion below, see 127 Fed. 435.

Bernard D. O'Connell, pro se.

Herbert Parker, Atty. Gen. of Massachusetts, Frederick H. Nash, Asst. Atty. Gen., of Massachusetts, Lewis S. Dabney, Walter I. Badger, Charles W. Bartlett, Samuel J. Elder, and Marquis F. Dickinson, for defendants in error.

Digitized by Google

Before COLT, Circuit Judge, and ALDRICH and BROWN, District Judges.

ALDRICH, District Judge. The rule of law which holds that judges of courts of general jurisdiction shall only be subject to civil actions by private suitors in certain exceptional cases—as, for instance, where the acts complained of are clearly outside the jurisdiction of the court in which the judge presides—is very old and well understood. It is by no means and in no sense a rule of nonliability of modern enunciation or invention. The rule is founded upon a public policy which demands an independent judiciary, the leading idea being not so much protection to the judges or the courts as protection to the public in the right of an independent administration of justice.

Generally speaking, the remedy against an oppressive judiciary is a public remedy, which resides with the people at large, to be used by their authorized and responsible agents and representatives. We do not deem it at all necessary to elaborate or discuss a rule which has for a long time been familiar to the legal profession and to an intelligent and justly discriminating public, both in this country and England.

The questions involved in this case received very careful and painstaking consideration by the learned judge who presided in the Circuit Court, and we fully agree with the result there reached.

The only allegations in the declaration in question which tend to bring the case within the exception to the general rule of nonliability are the paragraphs which allege that the acts complained of were not judicial acts under the circumstances, and were done without authority or jurisdiction. Such general allegations are not sufficient to control the question whether a case shall proceed to trial, or, on the other hand, be dismissed upon the ground that the declaration states no cause of action, and that the proceeding is therefore frivolous. Rules of pleading require the particular acts complained of to be set forth. This the plaintiff does in this case, and in his general and concluding allegation says, "Said acts were not judicial acts," etc. An examination of the particular allegations show that all the acts relate to official doings and judicial functions exercised with reference to matters within the jurisdiction of the courts of which the defendants in question were judges. "Mere epithetic charges" of conspiracy and of oppression through extrajudicial doings are not sufficient to bring the case within the exception to the general rule of nonliability. The particular acts in support of the general charge must be stated, and, being stated in this case, they do not, in our view, sustain the general allegations in the sense of stating a legal cause of action.

We see no defect in the construction of the statute in question adopted by the court below which makes that provision of the act of Congress of July 20, 1892 (27 Stat. 252, c. 209, § 4 [U. S. Comp. St. 1901, p. 707]), with reference to the power of dismissal of frivolous or malicious actions, apply to cases where the affidavit of poverty was

Digitized by Google

filed simultaneously with the entry of the writ. While in a strictly technical sense the suit was brought when the writ was made, in the substantial and essential sense it was brought when the suit was entered and the parties were before the court. It is quite clear that Congress, while intending to extend to poor and meritorious suitors the privilege of having their wrongs redressed without the ordinary burdens of litigation, at the same time intended to safeguard members of the public against an abuse of the privilege by evil-minded persons who might avail themselves of the shield of immunity from costs for the purpose of harassing those with whom they were not in accord, by subjecting them to vexatious and frivolous legal proceedings. It would be extremely unwise and technical to defeat the manifest and salutary purpose of Congress by making this meritorious safeguard of power to dismiss apply only to proceedings where the affidavit of poverty was filed before the writ was filled out, thereby leaving at large frivolous cases in which parties avail themselves of the statute after the suit is technically brought and before the actual and substantial controversy begins.

But quite aside from the power to dismiss conferred by the statute in question, we have no doubt of the inherent and necessary power of courts of general jurisdiction to protect members of the public from vexatious suits through an exercise of the right to dismiss frivolous proceedings which upon the face of the pleadings present no cause of action recognized by the law. Unquestionably, the power to dismiss exists quite independent of express statutory authority, and may be exercised in a proper case by the court upon its own motion.

Among the later well-considered cases to this effect is that of Webb v. Fisher, 109 Tenn. 702, 72 S. W. 110, 60 L. R. A. 791, 97 Am. St. Rep. 863, where the court, declining to grant leave to the defendant to withdraw the general issue and to demur, proceeded upon its own motion to dismiss the suit upon the ground that the declaration stated no cause of action.

The judgment of the Circuit Court is affirmed, without costs to either party.

Digitized by Google

(131 Fed. 730.)

RUPP & WITTGENFELD CO. v. ELLIOTT et al.

(Circuit Court of Appeals, Sixth Circuit. May 9, 1904.)

No. 1,254.

1. PATENTS—CONDITIONAL LICENSE TO USERS—CONTRIBUTORY INFRINGEMENT.
It is within the right of the owner of patents for machines used by retail dealers to fasten buttons on shoes for customers to furnish such machines to users, without charge, under a license which permits their use only with wire purchased from such owner; and one who, with knowledge of such restriction, manufactures and sells to such users wire put up on spools in the exact form required for use on such machines, and which is suitable for no other use, with the intention that it shall be used on such machines, is liable as a contributory infringer.

2. SAME—SUIT FOR INFRINGEMENT—JURISDICTION.
A suit which raises a question of infringement is one arising under the patent law, and the fact that the patentee may also have a remedy by action for breach of contract does not defeat the jurisdiction.

Appeal from the Circuit Court of the United States for the Southern District of Ohio.

Frederick E. Niederhelman (Lewis M. Hosea, of counsel), for appellant.

Taggart, Dennison & Wilson, for appellees.

Before LURTON, SEVERENS, and RICHARDS, Circuit Judges.

LURTON, Circuit Judge. This is a bill to restrain contributory infringement of patents Nos. 408,700, 526,012, and 552,869, issued to the complainant W. E. Elliott for improvement in machines for attaching buttons to shoes. The Elliott button fastening machines are intended for use by retail shoe dealers in setting or resetting buttons upon shoes sold to customers. The bill avers that these machines are "adapted and intended to take a coil of continuous wire, feed the same to a convenient point in the machine, sever a section of the wire therefrom, construct and form a staple through the eye of a shoe button, and drive the staple, or the prongs thereof, through the leather of the shoe, and clinch the same in position, * * * all by one stroke or operation of the machine. * * * That it was necessary to use wire of a certain size, and a certain temper or color, and coiled or put up in packages so shaped as to be received into the appropriate part of the machine." Machines according to these patents are made by the complainant the Elliott Machine Company, but are never sold, but placed in the hands of users under a license to use only in connection with staple wire purchased from the patentee. Every machine carries a metal inscription indicating that the patentees retain the title, and consent only to this restricted use. It is averred that the owners of the patent thus limit their own compensation to the profit upon the wire used in forming staples. It is averred that more than 6,000 machines have been thus placed in the hands of retail shoe dealers within the United States, and all of them conditioned in use as stated above. The

¶ 1. See Patents, vol. 38, Cent. Dig. § 402.
Contributory infringement of patent, see note to Edison Electric Light Co. v. Peninsular Light, Power & Heat Co., 43 C. C. A. 485.

Digitized by Google

bill charges that the defendants, with knowledge of this method of business, and that the mechanism embodying the Elliott inventions could only be lawfully used with the wire procured from the Elliott Company, "have continuously been engaged for several years past, and are now engaged, in selling, from time to time, to the said users of the Elliott machines, and for the purpose and with the express intent that the same shall be used upon the said Elliott machines, wire put up in spools or coils, and not furnished by the Elliott Company; that the wire so sold by the defendants to the users of the Elliott machines has been and is put up on spools or coils of the exact form, size, and shape suitable for use upon the Elliott machines, *and suitable for no other use," etc.* To this bill the defendants filed a demurrer for want of equity. District Judge Thompson, upon the authority of the opinion of this court in Heaton-Peninsular Button Fastener Co. v. Eureka Specialty Co., 77 Fed. 288, 25 C. C. A. 267, 35 L. R. A. 728, overruled the demurrer, with leave to answer. An answer was filed, but, by leave of the court, withdrawn; the defendants preferring to stand upon their demurrer. Thereupon a decree by default was entered, and the defendants perpetually enjoined from selling wire to the users of such machines, intended and adapted to be used in the manner described in the bill of complaint.

That the complainants were entirely within the boundary of their patent rights in permitting the use of their invention only in connection with wire sold by themselves is not an open question in this court. The conditions imposed upon users of the Elliott machines are substantially those sustained in Heaton-Peninsular Button Fastener Co. v. Eureka Specialty Co., 77 Fed. 288, 25 C. C. A. 267, 35 L. R. A. 728. The nature and limits of the monopoly acquired by a patentee were there thrashed out, and every aspect of the subject presented by the briefs of counsel for the appellants is dealt with in that opinion. That aspect of the question has since been before the Supreme Court, and the general view of this court, as expressed in that opinion, approved, in Bement v. National Harrow Co., 186 U. S. 70, 91, 22 Sup. Ct. 747, 46 L. Ed. 1058. After referring to certain limitations upon the rights of a patentee growing out of the police power of the state, referred to in the opinion of this court, Justice Peckham, speaking for the Supreme Court, concludes a discussion of the right of the patentee to impose such conditions as he may elect by saying:

> "Notwithstanding these exceptions, the general rule is absolute freedom in the use or sale of rights under the patent laws of the United States. The very object of these laws is monopoly, and the rule is, with few exceptions, that any conditions which are not in their nature illegal, with regard to this kind of property, imposed by the patentee, and agreed to by the licensee, for the right to manufacture or use or sell the article, will be upheld by the courts. The fact that the conditions in the contracts keep up the monopoly or fix prices does not render them illegal."

Heaton-Peninsular Button Fastener Co. v. Eureka Specialty Co. has also been approved by the Circuit Courts of Appeals of the Second and Seventh Circuits (Cortelyou v. Lowe, 111 Fed. 1005, 49 C. C. A. 671; Victor Talking Machine Co. v. The Fair, 123 Fed. 424, 426, 61 C. C. A. 58), and by Judge Lowell in Tubular Rivet & Stud Co. v. O'Brien (C. C.) 93 Fed. 200, and Edison Phonograph Co. v. Pike (C. C.) 116 Fed. 863, 867.

Digitized by Google

It is equally clear that the averments of the present bill bring the case fully within the authority of Heaton-Peninsular Button Fastener Co. v. Eureka Specialty Co., in respect to the contributory infringement by the defendants. The insistence that the opinion of this court in respect to the doctrine of contributory infringements, as applied to cases of the type of that before us, is in conflict with Morgan Envelope Co. v. Albany Perforated Paper Co., 152 U. S. 430, 14 Sup. Ct. 627, 38 L. Ed. 500, presents no new aspect of that case for consideration. The broad difference between the effect of licensing a machine to be used only with a certain article, or for a special purpose, or in a particular place, and the sale outright of a machine with an "understanding" that an article made an element of the patent, which it was the object of the mechanism to deliver and destroy in delivering, should be supplied only by the patentee, is emphasized not only in that opinion, but again in Thomson-Houston Electric Co. v. Ohio Brass Co., 80 Fed. 712, 26 C. C. A. 107, where the opinion was by Judge Taft. The use of an invention in violation of the restrictions and conditions imposed by the patentee upon his licensee is a use prohibited, and a defiance of the monopoly reserved by the patentee. It is necessarily an unlawful and prohibited use of the invention, and an invasion of the patentee's rights, in every sense of the term. An action which raises a question of infringement is an action arising under the patent law. That the patentee may have a remedy for breach of contract, also, does not defeat the jurisdiction. This, too, we decided in Heaton-Peninsular Button Fastener Co. v. Eureka Specialty Co. The same question arose in the Seventh Circuit Court of Appeals in Victor Talking Machine Co. v. The Fair (C. C. A.) 123 Fed. 424.[1] In that case the talking machines were sold to jobbers subject to the conditions that they should not be resold at less than a price named, and an inscription was placed upon each instrument giving notice that the patentee licensed the sale or use "only when sold at a price not less," etc. The court held that a sale in violation of this condition was an infringement. No question of contributory infringement arose in the case.

The mere sale of wire which might be used in the Elliott machines, or for some other noninfringing use, would by no means constitute the appellants infringers. It is the sale of wire adapted to the infringing use, with the intent and purpose that it shall be so used, which constitutes contributory infringement. It is the intent and purpose to aid and assist in bringing about an infringement which is the essence of the tort. In Loew Filter Co. v. German-American Filter Co., 107 Fed. 949, 950, 47 C. C. A. 94, this court, speaking through Judge Severens, said that the making and selling of certain filters "adapted to and intended, as they were, for no other use than filtering beer or similar fluids, should be held as contributing to such use by brewers, and as standing in the same liability as the parties actually using them." In Thomson-Houston Electric Co. v. Ohio Brass Co., 80 Fed. 712, 721, 26 C. C. A. 107, 116, Judge Taft, speaking for this court, said:

"It is well settled that, when one makes and sells one element of a combination patent with the intention and for the purpose of bringing about its use in such a combination, he is guilty of contributory infringement, and is equally liable to the patentee with him who in fact organizes the complete combination."

[1] 61 C. C. A. 58.

Digitized by Google

The intent that the article sold shall be used in an infringing way must be made out. In the case last cited it was said that an infringing intent "is a matter of certain inference from the circumstances that the parts sold can only be used in the combinations patented." It was added:

"Of course, such an inference could not be drawn, had the articles, the sale or offering of which was the subject of complaint, been adapted to other uses than in the patented combination. In the latter case the intention to assist in infringement must be otherwise shown affirmatively, and cannot be inferred from the mere fact that the articles are in fact used in the patented combination, or may be so used."

This case was followed and approved in Bullock Co. v. Westinghouse Co. (decided by this court March 8, 1904) 129 Fed. 105, 63 C. C. A. 607. The averment of the bill that the defendants, "with full knowledge of the exclusive rights of the complainants as aforesaid," refers very obviously to complainant's "exclusive rights" to supply coils of staple wire to be used in connection with their invention. An exclusive right to so supply wire was the subject of the preceding paragraph. It is then averred and charged that the defendants have been engaged "in selling, from time to time, *to the said users* of the Elliott machines, and for the purpose *and with the express intent that the same shall be used* upon the Elliott machines, wire put up in spools or coils, and not furnished by the Elliott Machine Company," and that said wire so furnished and sold to the users of such machines "is put up on spools or coils of the exact form, shape, size, color, and appearance of the spools or coils furnished by the Elliott Company, and of the exact form, shape, and size suitable for use upon the Elliott machines, *and suitable for no other use.*" (The italics throughout the opinion are ours.) Thus the averments are that the wire sold by defendants is, in the manner in which it is put up, in its size, color, and temper, especially adapted to use in the Elliott machines, and that *"it is suitable for no other use."* If this is true—and, for the purposes of a hearing upon the bill and demurrer, an averment of fact must be taken to be true—then the intent that the spools of wire sold by defendants shall be used in an infringing way is made out. But the bill goes further, and affirmatively charges that the sales so made to users have been made with "the purpose and with the express intent that the same shall be used upon the said machines," etc. The necessary averments to make out a selling and offering for sale of an article for use in connection with the Elliott machines, which is a prohibited and infringing use, could hardly be stated more distinctly. No other inference is reasonable than that if the defendants, as alleged, have for years been engaged in selling wire suitable only for use in Elliott machines, and with the intent that it should be used upon such machines, it has been so used as intended. But to still further strengthen this certain inference, the bill adds that some users of the machines "have purchased wire from the defendants, supposing and believing it to be the genuine wire furnished by the Elliott Machine Company." But it is not essential that there shall have been any actual infringement, in order to entitle a complainant to an injunction. The selling and offering for sale with the intent and purpose to bring about an infringement are enough to entitle com-

Digitized by Google

plainant to an injunction to prevent the threatened injury. Thomson-Houston Electric Co. v. Kelsey Electric Ry. Co., 75 Fed. 1005, 1008, 22 C. C. A. 1; Thomson-Houston Electric Co. v. Ohio Brass Co., 80 Fed. 712, 722, 26 C. C. A. 107; Wallace v. Holmes, 29 Fed. Cas. 79. Every offer to sell, to the users of such machines, coils or spools of wire suitable only for use in such machines, with knowledge of the limited license of the users, and with the intent that the article shall be used in such a way as to defy the terms of the license, is a proposal for a concert of action in bringing about an infringement. The conclusion we reach is that the averments of the bill make a case so closely identical with that presented in Heaton-Peninsular Button-Fastener Co. v. Eureka Specialty Co. as to require identical judgments.

The decree is accordingly affirmed.

(131 Fed. 734.)

DREWSON v. HARTJE PAPER MFG. CO.

(Circuit Court of Appeals, Sixth Circuit. June 16, 1904.)

No. 1,280.

1. PATENTS—EVIDENCE OF DATE OF INVENTION—PRINTED COPY OF PATENT.

The statement, in a printed copy of a patent issued and sold by the Patent Office, of the date when the application was filed, will be taken as prima facie evidence of such date, in the absence of objection, and the date of invention will be presumed to have been the same.

2. SAME—PATENTABLE NOVELTY—APPARATUS TO SEPARATE GASES FROM LIQUIDS.

The Drewson patent, No. 565,263, for an apparatus for separating gases from liquids under pressure, intended for use in the paper-pulp making art, to free the sulphurous acid gas blown off from the pulp digester from the cooking liquor escaping with it, is void for lack of patentable novelty.

Appeal from the District Court of the United States for the Southern District of Ohio.

This is a bill to enjoin infringement of the claims of patent No. 565,263, issued to the complainant, Viggo Drewson, "for certain improvements in apparatus for separating gases from liquids under pressure." The claims of the patent are as follows:

"(1) The combination of a separator for separating a gas and a liquid, a U-shaped pressure-tube, one leg of which is connected with said separator, said pressure-tube being adapted to contain a column of liquid for maintaining the pressure in said separator, and a cooler for said separator for maintaining the liquid in a liquid state.

"(2) The combination of a pulp-digester, a separator for separating a gas and a liquid, a pipe connecting said digester with said separator, means for carrying off the gas from said separator, a U-shaped pressure-tube, one leg of which is connected to said separator for containing a column of liquid, and a cooler for said separator for maintaining the liquid in liquid form."

The patentee, in his specifications, thus describes the object of his invention:

"In the making of paper-pulp from wood by the sulphite process, the wood, in the form of chips, is cooked to disintegration and decomposition in a digester containing sulphite liquor under steam pressure and heat. During the cooking process a valve is opened at frequent intervals, and sulphurous acid gas blown off from the digester, which is afterward used in cooking a subsequent charge. In the blowing off, particles of the cooking liquid are carried off with the gas, and it is desirable to separate such particles of the liquor from the gas, as such liquor is impregnated with the impurities resulting from the decomposition

Digitized by Google

of the wood in the digester, and these impurities have a damaging effect upon the subsequent charge. The object of this invention is to provide a simple and convenient means for separating impure particles of cooking liquor from a sulphuric acid gas blown off during the cooking operation, so as to prevent the impurities thereof from being returned to the digester, and damaging the product of the subsequent cooking operation."

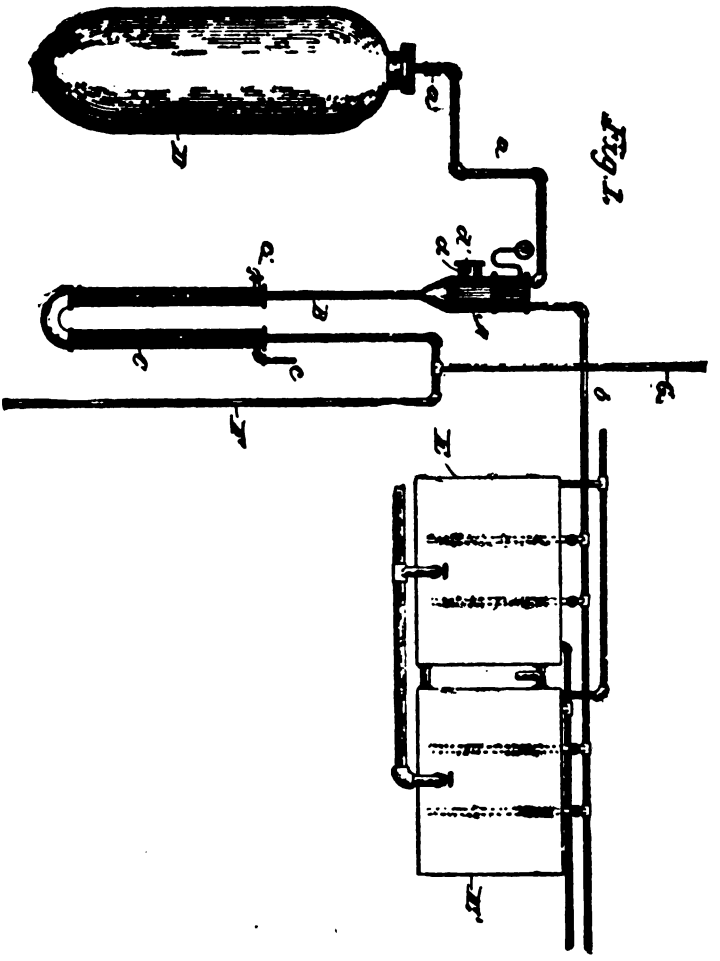

Fig. 1 of the drawing shows a side elevation of a pulp digester and reclaiming tanks provided with Drewson's apparatus. D represents a digester, provided with a pipe, a, leading out from the top thereof, through which gas is blown off, being regulated by a stopcock, a'. A represents the separator connected at its top with the outer end of pipe, a, and the sulphuric acid gas blown off from the digester, together with the cooking liquor carried as vapor or otherwise with the gas, is discharged into the top of this vessel. An outlet pipe, b, for the escape of the gases from the separator, leads out from the top to the reclaiming tanks, E and E'. A U-shaped pressure-tube, B, is connected at one end to the lower end of the separator, A, and at the other end with a discharge

Digitized by Google

pipe, F, provided with an upwardly extending vent pipe, G. This U-shaped pressure pipe is of sufficient height—say about 30 feet—and is filled with a suitable liquid, preferably water, so as to maintain a proper pressure in the separator, A. This U-shaped tube, B, is provided with a cooler, C, to prevent the liquid contained therein from being converted into steam and being blown off. This cooler, the inventor states, "is preferably in the form of a water jacket surrounding the lower portion of the said tube," etc.

The answer denied in general terms that Drewson was "the true, original, and first inventor of the apparatus for separating gases from liquids under pressure," and "denies that said apparatus was not known or used by others, and was not patented nor described in any printed publication before his alleged invention thereof." The answer also avers that, in view of the prior state of the art, the apparatus of the complainant did not involve patentable novelty, etc., and cites a large number of prior patents as anticipations; including among them, patent No. 545,550, September 3, 1895, to G. Symons.

Upon all of the evidence, the Circuit Court held both claims void for want of patentable novelty, and dismissed the bill.

J. E. Hindon Hyde, for appellant.
Wm. L. Pierce, for appellee.

Before LURTON, SEVERENS, and RICHARDS, Circuit Judges.

LURTON, Circuit Judge, after making the foregoing statement of the case, delivered the opinion of the court.

The first claim is broadly for an apparatus for separating a hot gas from a hot liquid. The second is limited to an apparatus for separating a specific hot gas from a specific hot liquid, and includes one additional element—a "pulp digester." It was not new in the pulpmaking art to utilize the hot sulphurous acid gases generated in a pulp digester to assist in cooking a fresh charge. The patentee, in his recital of the state of the art, admits this, but says that this valuable gas was blown off, mixed with cooking liquor impregnated with impurities resulting from decomposition of the wood in the digester. The object of his invention was simply to separate the valuable gas from the impure particles of cooking liquor which had theretofore been carried with the gas into the reclaiming tanks. As early as February 21, 1893, the patentee himself had obtained a patent for a method of utilizing this gas by forcing the hot gas into a new charge of cooking liquor at or near the bottom of a reclaiming tank, and causing the gases "to percolate through said liquor in direct contact therewith." That patent shows a pipe leading from the digester to the bottom of the reclaiming tanks. Of this pipe the specifications say:

"The gases are conducted from the digester through the supply pipe, a, into the lower part of the tank, A, in which the liquor for cooking the next charge of wood is placed."

The defect in this was that the apparatus described by him for using his process did not provide a means for separating the sulphurous acid gas blown off from the digester, and carried by his pipe, a, to the bottom of the reclaiming tank, from the particles of impure cooking liquor likely to be mixed with it. But it is a mistake to say that Drewson's first patent did not show an apparatus for forcing this hot gas into the new charge of cooking liquor. That it did not show an apparatus for effectually separating the desirable gas from the undesirable contaminated cooking liquor may be conceded. But Drewson was not the

Digitized by Google

first to discover the economical advantages in utilizing this waste sulphurous acid gas. See the patent to Tilghman, No. 70,485, and to Mitschenlich, No. 263,797, as well as others in evidence in this case, all prior to both of Drewson's patents. The case therefore narrows itself to the question as to whether it was invention to make an apparatus which will separate this hot sulphurous acid gas from an undesirable hot liquid likely to be blown off with the gas from the pulp digester. But it was not new to separate a gas from a liquid by means substantially identical with those shown by Drewson's patent. Separators with both air-cooled and water-cooled U-shaped pressure-tubes are found in connection with apparatus for the distillation of turpentine, glycerine, petroleum, and other articles. We need only call attention to the patent to Hawes for a turpentine still, to Laist for a glycerine still, and to Marrin for apparatus for refining petroleum and tar, and to Culmer for apparatus for a "separator condenser." The separating chamber of the Marrin patent is a vessel which receives a mixture of gas and liquid. Pipes running from the bottom convey the liquid to receiving tanks. "These pipes," says Prof. Wagner, the defendant's patent expert, "at the end next to the separator, are bent into U-shape, and form pressure-tubes which balance the difference in the pressure between the separators and the outlet end of the pipes." These U-shaped pipes and the separator itself are immersed in cooling water contained in a tank, which answers to the element "a cooler" in the claim of the patent. So in the patent to Laist of October 9, 1883, for an apparatus for the manufacture of glycerine shows a water-cooled U-shaped pressure-tube in connection with a worm from distilling apparatus. An apparatus even more closely identical is that shown in the patent to G. Symons for an apparatus for separating liquid from gas, automatic in its operation. This latter shows no cooler, and in that respect only differs from the device of Drewson. But it is said that for the purpose of the Drewson patent—the separation and reclamation of a hot gas from a hot liquid—the Symons patent would be inoperative. This failure, says Prof. Hutton, the complainant's expert, would be due to the continuous vaporization of the hot liquid standing at the top of the open arm of the U-shaped tube, which he says would be a vaporization explosive in character, which would carry out through the free end of the tube its entire contents if this liquid was at a temperature above the boiling point of the liquid contents. Conceding this, the problem presented would be to devise a cooler which should prevent such vaporization. But this was not a problem involving the exercise of invention. The cooling devices in use in condensing and distilling apparatus shown in the old patents to Howe, Laist, Marrin, Culver, and others, shown in evidence, make it plain that to apply a cooler to a column of hot liquid to prevent vaporization, or to a column of vapor to induce condensation, would involve nothing more than mechanical skill in one desirous of using the Symons device to separate a hot gas from a hot liquid. The utilization of some of the devices of the distilling art to the separation of a hot gas from a hot liquid might require an increased length of the legs of the U-shaped pressure-tubes shown therein, but this would be an obvious matter

Digitized by Google

to one skilled in the art as the proper means for dealing with the difference of pressure between the outlet pipe of a pulp digester and the atmosphere.

But it is said that the Symons patent is pleaded in the answer as an anticipation, and that it is not, in fact, such a patent. The Drewson patent in suit was issued August 4, 1896. The Symons patent was issued Sept. 3, 1895. But counsel for Drewson say that this patent was applied for June 12, 1895—a date antecedent to the issuance of the patent to Symons. The Drewson application is shown by a certified copy of the file wrapper and contents. The defendants offered in evidence a Patent Office printed copy of the letters patent No. 545,550, issued to George Symons. This contains the usual recital, "Application filed Jan. 17, 1895, serial No. 535,191." Section 892, Rev. St. [U. S. Comp. St. 1901, p. 673], reads as follows:

"Written or printed copies of any records, books, papers or drawings belonging to the Patent Office, and of letters patent, authenticated by the seal and certified by the commissioner or acting commissioner thereof, shall be evidence in all cases wherein the originals could be evidence; and any person making application therefor, and paying the fee required by law, shall have certified copies thereof."

This copy is not certified. But no objection was made on this or any other account, and the copy filed was received without any objection of record. The practice of waiving the certificate when a printed copy from the Patent Office is presented is probably universal. Walker on Patents, § 506. If the complainant had wished to object to the printed copy either because it had not been certified, or because it included the statement of the date of the filing of the application, or of the serial number of the application, he should have seasonably pointed out his objection, so that the complainant might have an opportunity to supply the defect. It may be that the date of the application, now universally found upon the Patent Office copies of letters patent, is not the best evidence of the filing date, inasmuch as such date is not technically a part of such letters, and that the date of filing the application should be shown by a certified copy of the application itself. Walker on Patents, § 129. It is unnecessary to decide this. The practice in this circuit has been to regard the date of filing an application as prima facie shown by the date stated in the printed copies of patents supplied by the Patent Office. In this case no objection to using the printed copy as evidence of the date of application is shown by the record, and no error has been assigned because the court below carried the date of the Symons patent back to the date of the filing of the application, as shown by the copy of the patent. The objection should have been made in season to have enabled the complainant to file a certified copy of the Symons application. Not having been made below, or if made not made upon the record, it is too late to make it here. The date of letters patent is prima facie the date of the application, in the absence of other evidence of a different date. Worley v. Tobacco Co., 104 U. S. 340, 342, 26 L. Ed. 821. The statement in a printed copy of letters patent issued and sold by the Patent Office is, in the absence of specific objection, prima facie evidence of the date

Digitized by Google

when the application was filed. The omission to object to evidence of prior invention at the proper time, because not set out in the answer as required by statute, is fatal, and the objection cannot be made on appeal. Roemer v. Simon, 95 U. S. 214, 220, 24 L. Ed. 384; Loom Co. v. Higgins, 105 U. S. 580, 26 L. Ed. 1177. In the absence of other evidence, the invention of the patent is presumed to be identical with that disclosed by the application. Loom Co. v. Higgins, 105 U. S. 580, 594, 26 L. Ed. 1177. Symons applied for his patent January 17, 1895—several months before the date of the filing of the Drewson application. The date of the first application, in the absence of any other evidence of the date of an invention, must be taken as establishing the date of the first invention. It follows, therefore, that the patent to Symons not only has the earlier issue date, but prima facie covers the earlier invention, and was therefore entitled to be regarded as an anticipating patent. The apparatus covered by the latter patent to Drewson is the apparatus of the earlier Symons patent, with a cooler added. The addition of a water jacket to the U-shaped tube of Symons was not invention. It was, at most, the application of an old device to the same use in a different industry.

The contention that the apparatus of Drewson is in some way peculiarly adapted to accomplish the saving of sulphurous acid gas, thereby solving a problem of great and peculiar difficulty in the paper-pulp making art, has been given careful consideration. But we have been unable to sustain the contention. All of the advantages of utilizing this gas when blown off from a pulp digester were well known, and the simple problem presented to Drewson was the arrangement of a separator which would separate a hot gas from a hot liquid in order to prevent the contaminated liquor mingled with the gas from passing with the gas into the reclaiming tanks. He found in the old arts various kinds of separator apparatus, and in the patent to Symons he found the device best suited to his purpose, provided he could cool the liquor in the pressure tubes so as to prevent its vaporization. The old art supplied him with many forms of coolers. The best way of keeping the water in his U-shaped tube cool enough to prevent vaporization did not present so difficult a problem as that considered in Solvay Process Co. v. Michigan Alkali Co., 90 Fed. 818, 33 C. C. A. 285, where it was held that the adaptation of a well-known method of cooling a column of hot liquid to the same purpose in another art was not invention.

The decree of the court below is accordingly affirmed.

Digitized by Google

(132 Fed. 248.)

BURR v. KNICKERBOCKER STEAM TOWAGE CO.

(Circuit Court of Appeals, First Circuit. July 23, 1904.)

No. 524.

1. TOWAGE—GROUNDING OF TOW—PRESUMPTION OF NEGLIGENT TOWAGE.

Where it was shown that the moving of a schooner from her dock up the river to a wider part of the channel, to be there turned and headed for the sea, was in sole charge of a tug, and that, although it was a calm summer day, with a moderate tide, and the schooner's helm was hard aport, she ran aground on the port side of the channel before she had gone more than three or four lengths, a prima facie case of negligence against the tug is made out, and to exonerate herself from liability she has the burden of showing that the accident occurred from some cause for which she was not in fault.

Appeal from the District Court of the United States for the District of Maine.

In Admiralty. Suit against tug for injury of tow by grounding.

Benjamin Thompson, for appellant.

A. Nathan Williams, for appellee.

Before COLT and PUTNAM, Circuit Judges, and BROWN, District Judge.

BROWN, District Judge. We are of the opinion that the grounding of the four-masted schooner Mary Manning on the westerly shore of the Penobscot river about two miles below Bangor, August 20, 1900, was through the fault of the steam tug Seguin.

The Seguin undertook to move the schooner from the American Ice Company's wharf on the westerly shore of the river, and to tow her up the river some 1,400 or 1,500 feet, to a place where the channel was wider, and there to turn her, preparatory to her departure on her voyage. The schooner had an outside berth at the wharf; the schooner Charles A. Campbell having the inside berth. The Manning was headed up the river, and was loaded with ice. Her draft was 19 feet 4 inches forward, and 19 feet 3 inches aft. The channel opposite the wharf was about 270 feet wide.

Whether she could have been turned at the wharf is an immaterial question, since there is no doubt that it was proper to take her up the river to a wider place, where it was customary to turn large vessels. There was an abundance of water to carry her clear, and there was was no danger of grounding if the Manning had moved directly up the river or out into the stream. Unless the schooner moved in farther towards the westerly shore, there was no danger of touching bottom.

The Seguin had entire charge of moving the schooner, and there was no reason, so far as we can see, why, with the exercise of ordinary skill, the schooner could not have been kept off the shore. The tide was running up the river from half a mile to a mile an hour,

Digitized by Google

with a set towards the easterly shore, and there was practically no wind to affect the vessel.

The answer alleges that:

"The tug made fast to libelant's vessel by a hawser over her starboard bow, and started ahead, and proceeded out into the channel, then headed up the river so as to bring a strain on the vessel's bow off shore; that the tug had only proceeded a short distance when the vessel took an unexpected sheer inshore and grounded after she had proceeded about three or four times her length; that the grounding was in no way due to the fault of the tug, but was wholly due to the fault of the vessel in not following in the direction of the tug."

There is no direct evidence of any fault of the schooner, but, on the contrary, there is direct and uncontradicted evidence that the schooner's wheel was hard aport throughout.

Under such circumstances, the fact that the schooner went aground casts upon the tug the burden of establishing some excuse for the deviation from the usual and proper course.

The Steamer Webb, 14 Wall. 406, 20 L. Ed. 774, is cited to the proposition that no presumption of negligence arises from the mere fact of damage to a tow. In that case, however, the court said (page 414, 14 Wall., 20 L. Ed. 774):

"But there may be cases in which the result is a safe criterion by which to judge of the character of the act which has caused it. Had the ship in this case been towed upon the shoal ten miles north or ten miles east of Handkerchief Shoal, after leaving that shoal for Cross Rip, it cannot be doubted that the fact of the stranding at such a place would, in the absence of explanation, be almost conclusive evidence of unskillfulness or carelessness in the navigation of the tug. The place where the injury occurred would be considered in connection with the injury itself, and together they would very satisfactorily show a breach of the contract, if no excuse were given. At least they would be sufficient to cast upon the claimants of the tug the burden of establishing some excuse for the deviation from the usual and proper course."

In Inland & Seaboard Coasting Co. v. Tolson, 139 U. S. 551, 554, 555, 11 Sup. Ct. 653, 35 L. Ed. 270, it was said:

"The whole effect of the instruction in question, as applied to the case before the jury, was that if the steamboat, on a calm day, and in smooth water, was thrown with such force against a wharf properly built as to tear up some of the planks of the flooring, this would be prima facie evidence of negligence on the part of the defendant's agents in making the landing, unless upon the whole evidence in the case this prima facie evidence was rebutted. As such damage to a wharf is not ordinarily done by a steamboat under control of her officers and carefully managed by them, evidence that such damage was done in this case was prima facie, and, if unexplained, sufficient, evidence of negligence on their part, and the jury might properly be so instructed. Stokes v. Saltonstall, 13 Pet. 181, 10 L. Ed. 115; Transportation Co. v. Downer, 11 Wall. 129, 134, 20 L. Ed. 160; Railroad Co. v. Pollard, 22 Wall. 341, 22 L. Ed. 877; Le Barron v. East Boston Ferry, 11 Allen, 312, 317, 87 Am. Dec. 717; Feital v. Middlesex Railroad, 109 Mass. 398, 12 Am. Rep. 720; Rose v. Stephens & Condit Co. (C. C.) 11 Fed. 438."

In order to prove negligence, it is not invariably necessary that the libelant shall show the specific details of negligence, or account for the exact manner in which the injury is inflicted. When the libelant proved that the moving of the vessel was in sole charge of

Digitized by Google

the tug, that the schooner's wheel was hard aport, and that on a summer afternoon, with a light breeze and moderate tide, and with nothing to prevent the tug from having such full control of the schooner as would keep her in deep water, she was so towed that she came up on the westerly shore, or upon a well-known rock, before she had gone more than three or four lengths, a prima facie case of negligence was established.

The learned District Judge, though finding that the accident was not properly accounted for, declined to hold the tug responsible in damages. We are of the opinion that this was error, and that, under the rule of the cases cited, the burden of explanation was cast upon the tug to account for this apparently unnecessary grounding. The tug proved no fault in the management of the schooner, and gave no reasonable explanation why she did not keep the schooner under control. Upon this showing alone the libelant was entitled to a decree for damages.

The libelant contends also that upon the admitted fact that the tug took the hawser off the Manning's starboard bow, and ordered 40 fathoms of line to be paid out before starting, she should be held negligent, as under such circumstances she could not have any control over the tow.

Evidence was offered to show that this manner of towing a vessel was in itself, under the circumstances, dangerous and unskillful.

We find it unnecessary, however, to determine whether a tow could be properly controlled, in such a situation, while on a 40-fathom hawser. It is enough to decide that the schooner was not properly controlled, and that she was permitted to ground, without fault on her part, when there was no reason why she could not have been kept clear.

The case is remanded to the District Court, with directions to amend its decree by allowing damages for the grounding of the Manning on the westerly side of the Penobscot river, and for further proceedings not inconsistent with this opinion, and the appellant recovers his costs of appeal.

Digitized by Google

(131 Fed. 833.)

UNITED STATES v. BARTRAM BROS. SAME v. BENJAMIN H. HOWELL, SON & CO. SAME v. AMERICAN SUGAR REFINING CO.

(Circuit Court of Appeals, Second Circuit. June 2, 1904.)

Nos. 102-104 (2,918-2,920).

1. CUSTOMS DUTIES—SUGAR—POLARISCOPIC TEST—COMMERCIAL USAGE.
In construing the provision in paragraph 209, Tariff Act July 24, 1897, c. 11, § 1, Schedule E, 30 Stat. 168 [U. S. Comp. St. 1901, p. 1647], regulating duty on sugars according to the polariscopic test, *held* that the expressions therein, "testing by the polariscope" and "shown by the polariscopic test," are not used with any special trade meaning that would confine them to a particular method of conducting such test, but import an intention on the part of Congress that the method adopted should be the one best calculated to make a scientific determination.

2. SAME—CUSTOMS REGULATIONS—AUTHORITY OF SECRETARY OF THE TREASURY.
Under the general power of the Secretary of the Treasury to make customs regulations not inconsistent with law, granted by section 251, Rev. St. U. S. [U. S. Comp. St. 1901, p. 138], it is competent for that officer to prescribe the method of "testing by the polariscope" the sugars dutiable according to such test under paragraph 209, Tariff Act July 24, 1897, c. 11, § 1, Schedule E, 30 Stat. 168 [U. S. Comp. St. 1901, p. 1647]; and so long as he acts in good faith, and it does not appear that his regulations operate to make the polariscopic test less accurate than when Congress adopted it, the courts should not interfere with the administrative details confided to him.

3. SAME—TREASURY REGULATIONS—COGNIZANCE BY CONGRESS.
Where, for a period of years covering the operation of several tariff acts, the Secretary of the Treasury has made regulations for carrying out certain provisions in those acts, it is to be presumed that subsequent legislation by Congress was enacted with reference to such regulations.

Appeals from the Circuit Court of the United States for the Southern District of New York.

For opinion below, see 123 Fed. 327.

These causes come here upon appeal from a decision of the Circuit Court, Southern District of New York (123 Fed. 327), reversing a decision of the Board of General Appraisers (G. A. 4,386, T. D. 20,850), which affirmed the action of the collector of the port of New York in assessing duty on certain sugars imported under the tariff act of July 24, 1897. Paragraph 209 of that act (chapter 11, § 1, Schedule E, 30 Stat. 168 [U. S. Comp. St. 1901, p. 1647]) provides as follows:

"209. Sugars not above number sixteen Dutch Standard in color, * * * testing by the polariscope not above seventy-five degrees, ninety-five one-hundredths of one cent per pound, and for every additional degree shown by the polariscopic test, thirty-five one thousandths of one cent per pound, additional and fractions of a degree in proportion."

Chas. Duane Baker, for appellant.

John E. Parsons, for appellees.

Before WALLACE, LACOMBE, and COXE, Circuit Judges.

LACOMBE, Circuit Judge. The opinions of the Board of General Appraisers and of the Circuit Judge, respectively, present forcibly the opposing theories of construction of the paragraph above quoted, and set forth the facts with quite sufficient fullness. Although the record is

Digitized by Google

a long one, there is but a single question presented, which is determinative of the case, viz., whether Congress used the words "testing by the polariscope" and "shown by the polariscopic test" with some special trade meaning, which would confine them to a particular method of conducting such test.

The following excerpts from the opinion of the Circuit Court and from that of the Board of General Appraisers show the particular matter complained of:

"The polariscope is an instrument so adjusted that when a ray of polarized light passes through a tube filled with a certain solution of sugar the scale indicates the percentage of pure sugar. * * * At the time of the passage of the act in question the polariscopic test had been in use for some twenty years." "During that period it was the custom of merchants, in buying and selling sugar, to have two separate polariscopic tests made, each by a trade chemist employed by the respective parties to the transaction. Where these two tests differed, a compromise or settlement test was adopted, which was the average of degrees shown by the two tests." "Under [this] system the actual readings of the scale on the eye piece of the polariscope were taken as showing the actual value of the sugar; * * * that is, the test was one made by reading by the eye. * * * Upon the passage of the act here in question the Treasury Department promulgated regulations for the use of the polariscopic test, which * * * provide that the reading must be corrected by certain arbitrary additions as prescribed in a table prepared by the officers of the government."

Although in the excerpt last above quoted the additions are called "arbitrary," the Circuit Court found (as did the Board of General Appraisers) that the preponderance of proof sustained the contention of the government that "there is a variation in the reading of the polariscope according to variations in temperature at the place where the sugar is tested; that the corrections and additions provided for by the regulations merely consist in an addition of .3 per cent. for each 10 degrees Centigrade of temperature above that at which the polariscope is standardized [viz., 17.5 degrees C.]; and that in this way the actual amount of pure sucrose in each sample is more accurately determined than was the case under the old eye test." The importers vigorously contest this proposition as to the effect of change of temperature but evidently there is a division of scientific opinion thereon, and appellants have not made out a case strong enough to overcome the presumption that the Secretary of the Treasury, who chose the method of testing as between old and new, properly selected the one which would be likely in the greater number of cases to eliminate error. Apparently no single polariscopic test can be accepted as absolutely accurate. Under the old system there were constant differences, which were "adjusted" by striking averages. Under the new, occasionally the reading, when corrected for temperature, will indicate that the sugar is one-, two-, or three-tenths of 1 per cent. above par, which is impossible. There are some suggestions as to the cause of this apparent excessive percentage in the opinion of the board, which open up chemical questions that need not be discussed here.

The Circuit Court, although satisfied that the so-called new method of conducting the polariscopic test was on the whole more accurate than the old, nevertheless reached the conclusion that the Treasury Department was not justified in adopting it, because the term "testing

Digitized by Google

by the polariscope" had a well-settled commercial meaning at the time of the passage of the act of July 24, 1897, c. 11, § 1, Schedule E, par. 209, 30 Stat. 168 [U. S. Comp. St. 1901, p. 1647], and that the customs officers should subject sugars to such test only in the way in which dealers in sugars had been testing them for 20 years. In this conclusion we are unable to concur. There is nothing in the phrases themselves, "testing by the polariscope," or "shown by the polariscopic test," which indicates that they are peculiarly trade terms, as are "white goods," "hem-stitched handkerchiefs," "structural iron," etc. On the contrary, they seem to import that Congress intended that there should be a scientific determination as to some constituent or constituents of the sugar, for the polariscope is a scientific instrument, and, as the proof shows, has never been used by the traders themselves, but only by expert chemists whom they employ. If this be so, if Congress had in mind the making of such scientific determination, then the only question to be answered is whether the method finally adopted is best calculated to achieve the result; and it is immaterial that prior to the passage of the act the chemists employed by dealers followed some different method of conducting such test. Concededly, there are no instruments and no methods now known to science which will secure an absolutely accurate polariscopic test. Suppose, now, that some one should discover an improvement in instrument or method which would wholly eliminate every inaccuracy—even that resulting from the personal equation—and that every scientist agreed that such new way of testing by polariscope was absolutely accurate, could it be that the government would be debarred from applying such improved polariscopic test to imported sugars because it was not known to science when the act was passed? Some years ago Congress regulated a sliding scale of duties on manufactures of cotton by the number of threads to the square inch counting warp and filling. Certain cotton goods were brought in, which the importers claimed were not within the particular paragraph, on the theory that it included only goods described and classed by the trade according to the number of threads when the act was passed. The importers offered to show not only that the goods in question were excluded in trade from the group of "countable cottons," but that in trade no one ever counted threads except by the microscope (or the unaided eye), and that it was impossible to count the threads in the imported goods in any such way; unraveling alone would disclose the number. The court held, however, that such proof was immaterial, because there was "no reference in the statute, either expressly or by implication, to any commercial usage, and there is no language in it which requires for its interpretation the aid of any extrinsic circumstances." Newman v. Arthur, 109 U. S. 132, 3 Sup. Ct. 88, 27 L. Ed. 883. The same rule of construction would seem equally applicable to a chemical and to an arithmetical test.

The polariscope is an instrument of science, used in the laboratory. It is composed of many parts, varying apparently in details of structure (some are made in Germany, others in France). It requires special knowledge and experience to operate it. The conditions under which the test is conducted apparently in some slight measure modify the results indicated by the readings. All these matters of detail have to be

Digitized by Google

provided for, and Congress has not specifically provided for them in the act itself. They come naturally within the province of the Secretary of the Treasury under the general power to make regulations not inconsistent with law, granted to him by section 251, Rev. St. U. S. [U. S. Comp. St. 1901, p. 138]. It is left to him to decide whether he will supply the testers with French or with German instruments, what measure of study and experience shall qualify persons seeking employment as testers, what improvements have received a sufficiently broad acceptance by scientists to warrant their adoption, which of two methods of manipulation (if there be two) touching the relative value of which scientists may be equally divided shall be the one followed in government laboratories. So long as he acts in good faith, and it does not appear that his regulations operate to make the prescribed test less accurate than it was when Congress adopted it, the courts should not interfere with administrative details which are confided to him.

Provisions as to payment of sugar duty on polariscopic test are first found in paragraph 235, Tariff Act March 3, 1883, c. 121, Schedule E, 22 Stat. 502. Thereupon the Secretary of the Treasury prescribed regulations which are apparently like those now in force, except as to correction for temperature. These regulations, however, did not provide for taking the average of conflicting tests made by experts employed one by the government, the other by the importer, which would be in substantial conformity to the mercantile practice, where buyer and seller had each his own expert. On the contrary, these regulations of 1883 required that all the tests—two or more—should be made by government chemists, and an average of them taken. In the tariff act of 1890 (Act Oct. 1, 1890, c. 1244, 26 Stat. 567), some sugars were admitted free, others were made dutiable, but only by color standard, the provision for polariscopic test being omitted. In section 3 of that act (26 Stat. 612), however, which provided for duties on sugars coming from countries which might thereafter discriminate against the United States, such test is included; and the same is true of paragraph 231 (chapter 1244, § 1, Schedule E, 26 Stat. 583), which provided for the payment of bounties on domestic sugar. Thereafter (August 18, 1892) the Treasury Department prescribed regulations relative to the bounty on sugar, including directions for conducting the polariscope test, which were substantially the same as those now in force containing provisions for making additions to the reading of the instrument in order to correct for variance in temperature. The book containing them quotes the provisions of the tariff act of 1890 not only as to bounty, but also as to countries discriminating against the United States. It also calls attention to proclamations of the President, March 15, 1892, suspending from that date the provisions of the tariff act relating to the free introduction of sugar, and declaring the duties set forth in section 3 (which provided for polariscopic tests) to be in force as to sugar the product of or exported from Colombia, Haiti, and Venezuela. Manifestly these regulations applied not only to domestic sugars, but to such imported sugars as might come from those countries. Although it does not appear whether or not any sugars came here from such countries in 1892, 1893, or 1894, it must be assumed that Congress was fully cognizant of all the provisions of the treasury regulations, and

Digitized by Google

that its subsequent legislation was enacted with full appreciation of what those regulations contained.

As we have seen, Congress in the act of 1890 had adopted two modes of classification for duty on imported sugars—color standard, combined with polariscopic tests, for such as might come from countries discriminating against the United States; color standard only for sugars coming from all other countries. In the next tariff act (August 28, 1894) it provided for color standard alone as to sugars, and for polariscope test as to molasses. It also repealed the provisions for bounties on domestic sugars. The Secretary of the Treasury thereupon (May 13, 1895) promulgated regulations for the sampling and classification of sugars and molasses under the provisions of the tariff act of 1894, and for the polarization of sugars as an aid in determining their dutiable value. These regulations did not provide for any correction on account of variance in temperature.

Therefore, when Congress passed the tariff act now under consideration, it knew that the secretary had made regulations as to polariscopic tests; that he had varied them from time to time—presumably to secure more accurate results; that sometimes he had directed that additions to the readings should be made for changes of temperature; that at other times he had not required such additions to be made. It seems a reasonable conclusion that Congress, when it passed the act of 1897, containing merely the phrase "testing by the polariscope," without any further directions as to such test, without approval or condemnation of either of the variant methods of conducting it which the Treasury Department had theretofore prescribed for imported as well as domestic sugars, intended to leave all details as to selection of instrument, employment of experts, and instruction as to method to the sound discretion of the secretary.

The decision of the Circuit Court is reversed, and that of the Board of General Appraisers is affirmed.

Digitized by Google

(130 Fed. 885.)

UNITED STATES v. AH CHUNG.

(Circuit Court of Appeals, Ninth Circuit. May 2, 1904.)

No. 1,022.

1. ALIENS—CHINESE—EXCLUSION—RESIDENCE—PRESUMPTIONS.

In proceedings for the deportation of a Chinaman, the fact that he was permitted to live in the United States for 19 years without molestation was insufficient to raise a presumption that his arrival antedated the date on which the exclusion act (Act May 6, 1882, c. 126, 22 Stat. 58, as amended by Act July 5, 1884, c. 220, 23 Stat. 115 [U. S. Comp. St. 1901, p. 1305]), went into effect, he never having registered as a laborer or merchant as required by law.

Appeal from the District Court of the United States for the Northern Division of the District of Washington.

Jesse A. Frye, U. S. Atty., for appellant.

Before GILBERT and ROSS, Circuit Judges, and HAWLEY, District Judge.

ROSS, Circuit Judge. Accepting the appellee's testimony as true, he came to the United States from China prior to Chinese Exclusion Act May 6, 1882, c. 126, 22 Stat. 58, and, of course, prior to the similar act of 1884 (Act July 5, 1884, c. 220, 23 Stat. 115 [U. S. Comp. St. 1901, p. 1305]), and subsequent acts of Congress upon the same subject, although he did not give the exact date of his arrival at San Francisco. He was then 12 years old, and at once engaged in manual labor. He claims to have since become a merchant. He has remained in this country continuously, but never registered either as a laborer or as a merchant under the laws of Congress in respect to that matter. The court below held (reversing the action of the commissioner) that, the appellee "having been permitted to live in this country for nineteen years without molestation, there is a reasonable presumption that his arrival antedated the exclusion act, or at least the date on which it went into effect, rather than that his entrance was clandestine." In cases of this character there is no such presumption. United States v. Wong Dep Ken (D. C.) 57 Fed. 206; United States v. Lung Hong (D. C.) 105 Fed. 188; United States v. Chun Hoy, 111 Fed. 899, 50 C. C. A. 57; United States v. Chu Chee, 93 Fed. 797, 35 C. C. A. 613; United States v. Yong Yew (D. C.) 83 Fed. 832; Li Sing v. United States, 180 U. S. 486, 21 Sup. Ct. 449, 45 L. Ed. 634.

The judgment must be reversed, and the cause remanded to the court below, with directions to affirm the judgment of the commissioner directing the deportation of the appellee to China.

¶ 1. Citizenship of the Chinese, see notes to Gee Fook Sing v. U. S., 1 C. C. A. 212, and Lee Sing Far v. Same, 35 C. C. A. 332.

Digitized by Google

(131 Fed. 705.)

SOUTHERN RY. CO. v. SIMPSON.

(Circuit Court of Appeals, Sixth Circuit. June 22, 1904.)

No. 1,292.

1. FEDERAL COURTS—STATE STATUTES—CONSTRUCTION—STATE DECISIONS—CONCLUSIVENESS.

The opinion of a state court of last resort, construing a state statute, is conclusive on the federal courts sitting in such state to the extent only of the precise question decided.

2. RAILROADS—INJURIES AT CROSSINGS—STATUTES—CONSTRUCTION.

Shannon's Code, §§ 1574–1576, requires every railroad company to keep some person on its locomotive always on the lookout ahead, and, when any person, animal, or other obstruction appears on the road, to sound the alarm whistle, put down brakes, and exercise every possible means to stop the train and prevent an accident, and renders a railroad company absolutely liable for an accident caused by a failure to comply therewith. *Held*, that such sections did not render the railroad company absolutely liable for a collision occurring in the daytime, while the engine was being operated backwards with the tender in front, and that the refusal of the court to charge that if the engineer was actually on the lookout ahead of his engine, and saw plaintiff's vehicle as soon as it could have been seen, as it approached and entered on the crossing, and the engineer immediately blew the alarm whistle, put down the brakes, and used every possible means to stop the train and prevent the accident, plaintiff could not recover, though the engine was being operated backwards, was error.

3. STATUTORY OBLIGATION—PLEADING—AMENDMENT—DEPARTURE.

Where a declaration in an action for injuries at a railroad crossing alleged that defendant wrongfully and negligently ran its engine and cars against plaintiff, when crossing its track in a lawful and prudent manner, it stated a cause of action at common law and under Shannon's Code, §§ 1574–1576, requiring every railroad company to maintain a lookout ahead on the locomotive, etc., and rendering the company absolutely liable for damages occasioned by failure to comply with the act, though such act was not referred to in the declaration; and hence the amendment thereof, by adding a count specially declaring liability under the statute, did not constitute a departure.

4. SAME—CONTRIBUTORY NEGLIGENCE.

In an action against a railroad company for injuries at a crossing, under Shannon's Code, §§ 1574–1576, requiring every railroad company to keep some person on its locomotive on the lookout ahead, and certain other precautions, and rendering such company absolutely liable for injuries occasioned by a failure to comply with such sections, contributory negligence is no defense.

5. SAME—EVIDENCE.

Where a railroad company was not required by Shannon's Code, § 1574, to blow the whistle or ring the bell at a crossing at which plaintiff was injured, evidence tending to show a custom of the company, subsequent to the collision, to blow the whistle at such crossing, was inadmissible.

In Error to the Circuit Court of the United States for the Eastern District of Tennessee.

¶ 1. State laws as rules of decision in federal courts, see notes to Griffin v. Overman Wheel Co., 9 C. C. A. 548; Wilson v. Perrin, 11 C. C. A. 71; Hill v. Hite, 29 C. C. A. 553.

See Courts, vol. 13, Cent. Dig. § 957.

Digitized by Google

The following is the opinion of Clark, District Judge, in the court below, on motion for new trial:

It is not deemed necessary to go over the facts of this case in detail. It will be sufficient to say that I have no doubt, on the facts of this case, that the plaintiff was guilty in law of contributory negligence. The doctrine which exempts him from imputed negligence of the hack driver is not to be understood as exonerating him from the consequences of his own personal negligence, and a man of full years and intelligent judgment is not permitted to get in the conveyance of another person, and approach and attempt to go over a dangerous crossing like this, without saying one word or doing one thing for the safety of himself. It is in his power either to suggest to the driver of the conveyance to stop, or to look, or to listen, or to take some other precaution reasonably suggested by the dangerous situation. If the driver should fail to do so, the passenger has the right to insist that the conveyance shall be stopped, and that the passenger be allowed to get out and discharge the duty of reasonable care for the protection of his own life, and it would be a startling announcement to say that the fact that imputed negligence is not recognized would, in its consequences, authorize a man to omit any precaution whatever to take care of himself. The decisions of the state Supreme Court, as I read and understand them (though the point is not free from doubt), so construe the statute of the state as to render the railroad company absolutely liable for an accident which occurs while a train is being moved by an engine coupled to that train with the tender in front, or when the engine is running backward. The Supreme Court seems not to have thought or considered whether, indeed, in many cases, the duty required by the statute might not be better discharged in this way than by having the engine headed forward. It would be difficult to find any substantial reason on which to base such a decision, but nevertheless it seems to be the established rule of that court, and such ruling is binding on this court. This being so, the right to recover could not be questioned, and it was the duty of the jury to assess the damages. The damages allowed should have been reduced by the plaintiff's contributory negligence.

There was one weak point in respect of the evidence introduced by the plaintiff, and that was the omission to sustain the plaintiff's own testimony by the surgeon or physician who had previously had charge of his surgical difficulties. It is not satisfactory, in fixing a serious responsibility on the defendant, to do so on the unsupported testimony of the plaintiff himself, who is without medical education or training, and a very interested party, it is needless to say. There is no doubt that whatever is in the plaintiff's case is the mere aggravation of previously existing injuries, and it is very doubtful if he has really suffered anything new, as distinguished from the mere aggravation of old injuries. I would have been much better satisfied with a verdict of $2,000 to $2,500 in this case, and, as the jury should have reduced the amount by contributory negligence, I think the verdict is excessive, and that the jury did not make such reduction. Conceding to the jury, however, the latitude which properly belongs to their discretion, I have concluded that the verdict may stand for the sum of $3,500, and that the plaintiff must agree to remit $1,000 of the recovery, or otherwise the verdict will be set aside and a new trial awarded. If the plaintiff shall voluntarily remit $1,000 of the damages, the motion for a new trial will be overruled. The plaintiff is allowed 10 days within which to signify to the clerk the course intended to be taken in this regard. If there is error in my reading and understanding of the Tennessee cases in relation to the statute, this is readily subject to review by the Circuit Court of Appeals, and the question is one which it may be very desirable and of practical importance to have reviewed.

Ordered accordingly.

Jourolmon, Welcker & Hudson, for plaintiff in error.

X. Z. Hicks, D. A. Wood, and Lucky, Sanford & Fowler, for defendant in error.

Before LURTON, SEVERENS, and RICHARDS, Circuit Judges.

Digitized by Google

LURTON, Circuit Judge. The plaintiff below sustained an injury by collision with a railway engine while crossing the railway track at a road crossing. Upon the conclusion of all the evidence the court instructed the jury to return a verdict for the plaintiff, and submitted to them the question of amount of damages only. This instruction was predicated upon an interpretation of a provision of the Tennessee Code requiring railroad companies to exercise certain precautions in the operation of their trains to prevent collision with persons or objects on the track. That requirement is in these words:

"Every railroad company shall keep the engineer, fireman, or some other person upon the locomotive, always upon the lookout ahead; and when any person, animal, or other obstruction appears upon the road, the alarm whistle shall be sounded, the brakes put down, and every possible means employed to stop the train and prevent an accident."

"Every railroad company that fails to observe these precautions, or cause them to be observed by its agents and servants shall be responsible for all damages to persons or property occasioned by, or resulting from, any accident or collision that may occur."

"No railroad company that observes, or causes to be observed these precautions shall be responsible for any damage done to person or property on its road. The proof that it has observed said precautions shall be upon the company."

Shannon's Code Tenn. §§ 1574–1576.

The engine at the time of the collision was being operated backwards, the tender being in front. The court denied a request by the railroad company to instruct the jury as follows:

"If the engineer was actually upon the lookout ahead of his engine, and saw the vehicle in which plaintiff was riding as soon as it could have been seen as it approached and entered upon the railroad crossing, and immediately blew the alarm whistle, put down the brakes, and used every possible means to stop the train and prevent the accident, then plaintiff cannot recover, notwithstanding the engine was at the time being operated backwards, because this would be a full compliance with the Tennessee statute."

Touching the meaning of section 1574, Shannon's Code Tenn., set out above, District Judge Clark said to the jury:

"The statute does not, according to any just import of the language, require that the engine and tender shall be run headforemost, or that it shall not be run with the tender in front, as was being done in this case; and as an original proposition it is difficult to find any ground upon which to put an interpretation on the statute which would make it mean that it prohibits the railroad company from running its engine with the tender in front, if it chooses to do so, or that it requires any more than, if the engine is so run, that some one shall be kept on the lookout ahead, and be in a position to see ahead."

The learned judge, however, deemed himself precluded from the right to exercise an independent judgment as to the meaning of the statute, because he was under obligation to follow the interpretation of the statute by the Supreme Court of Tennessee in the case of Railroad v. Dies, 98 Tenn. 655, 41 S. W. 860, and accordingly instructed the jury that the running of an engine backwards was a violation of the statute, and the company liable for any collision, without regard to whether the "engineer was in a position to see, and did see, and did comply with all the requirements of the statute."

Neither the case of Railroad v. Dies, nor any other Tennessee case, has ever involved the precise question presented by the instruction de-

Digitized by Google

nied, or required the Tennessee court to decide that the statute was violated whenever an engine was run backwards, without regard to the circumstances. Confessedly the statute does not in terms require the engine to run either backwards or forwards. A literal compliance with the statute would not under all circumstances be a compliance with its requirements. Thus the statute prescribes, among other things, that some person upon the locomotive shall always be upon the lookout ahead; but if the locomotive be at the rear of the train, or in the middle thereof, the spirit of the statute would not be obeyed, although some person upon the locomotive so situated should be always upon the lookout ahead. In such a situation the lookout upon the locomotive could not be upon the lookout ahead of the train, and the plain purpose of the statute would be evaded. Upon this consideration the Tennessee court held that the statute was not complied with by the operation of a train through the streets of a city by an engine in the rear. Railway Co. v. Wilson, 90 Tenn. 271, 16 S. W. 613, 13 L. R. A. 364, 25 Am. St. Rep. 693.

Neither does the statute in terms require an engine to be equipped with a headlight. But the effectiveness of a lookout would be practically destroyed by the neglect of a company to employ the ordinary means employed by railroad companies to make a lookout effective, and upon this consideration the Tennessee court construed the statute as having been violated by the operation of an engine upon a dark night without a headlight. Railroad v. Smith, 6 Heisk. 174. But this construction of the statute, by which it was read as requiring a locomotive to be equipped with a headlight when running at night, would not justify the requirement of a headlight when running in the daytime; for such an equipment would not add to the effectiveness of the lookout, and cannot by implication be added to the requirement of the statute under such conditions. In pursuance of the same considerations in respect of the implied requirement to make the lookout upon the locomotive effective as a lookout ahead, the Tennessee court in Railroad v. Dies, 98 Tenn. 655, 41 S. W. 860, held the statute had not been complied with by running a road engine backwards, without a headlight on the tender, through and across the streets of a city, at night. In the case last cited the effectiveness of the lookout upon the engine being run backwards was destroyed by the existence of conditions not found in the case now before us.

Under the facts of the Dies Case compliance with the statute in respect to a lookout ahead was impossible, and, as stated by Justice Wilkes, the railway company could not "absolve itself from all duty to comply with the requirements, because, forsooth, they had made it impossible to do so." But in the case under consideration the locomotive was being operated in daylight, and the absence of a headlight, which was the pregnant circumstance destroying the effectiveness of the lookout in the Dies Case, can cut no figure whatever. There was evidence in the case on hearing tending to show that the effectiveness of the lookout was not in fact impeded or lessened by the fact of the backward operation of the locomotive, and the request for an instruction submitted to the jury the question as to whether the lookout actually "saw the vehicle in which the plaintiff was riding as soon as it

Digitized by Google

could have been seen as it approached and entered upon the railroad crossing," and whether, when the object did appear upon the track, or within striking distance, all of the requirements of the statute were complied with, so far as was possible.

In every one of the cases cited above, and relied upon by defendant in error to establish the contention that the Tennessee court has authoritatively construed the statute as requiring the locomotive to be at all times run forwards, under penalty of absolute liability, without regard to circumstances, it plainly appeared that under the facts of the case the company had, to again quote from Railroad v. Dies, "placed itself in such condition as to be unable to comply with the statute" in respect to keeping an effective lookout ahead. If the facts in this case should establish that the company, in operating its locomotive backwards, did not "place itself in such a condition as to be unable to comply with the statute," but, upon the contrary, was in a condition to comply with the statute, and did in fact comply, it would be evident that this case is not necessarily governed by the case cited, but is plainly distinguishable.

We recognize the duty of following the construction placed upon a state statute by the highest court of the state. Western & Atlantic R. Co. v. Roberson, 61 Fed. 592, 604, 9 C. C. A. 646; Byrne v. K. C., Ft. S. & M. R. Co., 61 Fed. 605, 9 C. C. A. 666, 24 L. R. A. 693. That there are general expressions in the opinion of Judge Wilkes in Railroad v. Dies tending to support the contention that the statute is violated when an engine is run backwards, without regard to whether the company was thereby disabled from maintaining an effective lookout or not, must be conceded. But no such broad question was involved, and the actual decision was put upon the ground that the company had, by running its engine backwards at night, without a headlight, disabled itself from complying with that part of the statute requiring an effective lookout ahead. The opinion as a construction of the statute is authoritative to the extent of the precise question decided, and no farther. Nothing more was necessary to the determination of the rights of the parties to that controversy.

Concerning the authority of an opinion, Chief Justice Marshall, in Cohens v. Virginia, 6 Wheat. 399, 5 L. Ed. 257, said:

> "It is a maxim not to be disregarded that general expressions in every opinion are to be taken in connection with the case in which those expressions are used. If they go beyond the case, they may be respected, but ought not to control the judgment in a subsequent suit, when the very point is presented for decision. The reason of this maxim is obvious. The question actually before the court is investigated with care and considered in its full extent. Other principles which may serve to illustrate it are considered in their relation to the case decided, but their possible bearing on all other cases is seldom completely investigated."

This is the rule applied by the Tennessee court to its own decisions. In L. & N. R. R. Co. v. County Court, 1 Sneed, 639, 696, 62 Am. Dec. 424, it is said that:

> "The reasoning, illustrations, or references contained in a judicial opinion are not authority, but only the points in judgment, arising in the particular case before the court. The generality of the language used in an opinion is, therefore, always to be restricted to the case before the court, and is only authority to that extent."

Digitized by Google

There is nothing in the statute itself which forbids its construction and interpretation according to the well-settled principles applicable to the interpretation of statutes generally, and there is nothing in the Tennessee decisions which forbids the application of the ordinary principles of interpretation, where the duty of applying and construing the statute is required. Thus the statute has been construed as not requiring impossibilities, and, if everything is done which it was possible to do to stop the train or prevent a collision after an object appears on the track, liability is escaped, although everything required by the statute had not been done. Railroad v. Scales, 2 Lea, 688; Railroad v. Swaney, 5 Lea, 119, 121. So, if to reverse the engine under the circumstances would seriously endanger the safety of the train, that requirement has been excused. Routon v. Railroad Co., 1 Tenn. Cas. 528; Railroad v. Troxlee, 1 Lea, 520.

The statute has been held not to apply at all in the yards of the company, or when engaged in switching operations. Cox v. Railroad, 2 Leg. Rep. 168; L. & N. R. Co. v. Conner, 2 Baxt. 385; Railroad v. Pugh, 95 Tenn. 419, 32 S. W. 311. Neither does the statute apply to the rear section of a freight train broken in two by accident, when the broken section is following by gravity. Patton v. Railroad, 89 Tenn. 372, 15 S. W. 919, 12 L. R. A. 184. We therefore reach the conclusion that the question of construction and application presented by the request of the defendant company was not authoritatively controlled by any decision of the Tennessee court, and that the request embodied a sound and reasonable view of the statute and should have been given, and that it was error to deny same and to instruct the jury to find for the plaintiff.

The plaintiff amended his declaration by the addition of a count which declared specially upon the liability of the company under sections 1574–1576 of Shannon's Tennessee Code, being the provisions heretofore set out, imposing liability upon railroad companies not observing certain precautions in the operation of their trains. The defendant pleaded the Tennessee statute of limitations of one year to this additional count, upon the theory that this amendment introduced a new cause of action against which the statute had run before action brought. This plea was stricken out, and this ruling is now assigned as error.

The statute prescribes the precautions to be observed to avoid collision with objects and persons upon a railway track, and imposes liability for all damages resulting to the person or object directly resulting from a collision when the precautions are not observed, and absolves the company from all liability when the requirements have been complied with. The original declaration stated as a cause of action that the defendant company had wrongfully and negligently run its engine and cars upon and against the plaintiff when crossing its track in a lawful and prudent manner. It did not refer to the statute. But this was unnecessary. The case stated, if made out, was a case against the company under the local statute, as well as at common law, and the plaintiff, without declaring upon the statute, was entitled to proceed against the company for negligent nonobservance of the requirements of the local statute, without especially declaring upon it. The statute was a public law of the state in which the injury had been inflicted, and

Digitized by Google

in which the suit was pending, and the court below was bound to take notice of such a statute, as well as of the principles of the common law. Stephens on Pleading, 347. The declaration was, before amendment, one under which, by the pleading and practice in the Tennessee courts, the plaintiff was entitled to rely upon the provisions of the statute. Railroad v. Pratt, 85 Tenn. 9, 1 S. W. 618. The amendment, by adding a count specially declaring under the statute, was not, therefore, a departure in law or fact from the cause of action stated in the declaration as originally filed, because the plaintiff could have relied upon statutory negligence, as well before as after the amendment. The case is clearly distinguishable from Union Pacific R. Co. v. Wyler, 158 U. S. 285, 15 Sup. Ct. 877, 39 L. Ed. 983, for this reason, as well as for other reasons which need not be alluded to.

The crossing where this collision occurred was not designated by a signboard, as required by the first paragraph of section 1574, Shannon's Code Tenn. Unless so designated, the company is not obliged to blow the whistle or ring the bell. Railroad v. McDonough, 97 Tenn. 255, 37 S. W. 15; Southern Ry. Co. v. Elder, 81 Fed. 791, 26 C. C. A. 615. The plaintiff below was permitted, over objection, to prove that the defendant nevertheless customarily blew for this crossing, and "that they now blow all the time." He had before testified that upon this particular occasion the whistle was not blown or the bell rung. At the time that this evidence was offered the plaintiff admitted that he did not rely upon the failure of the defendant to whistle as a ground for recovery, but desired to prove that it customarily did whistle, for its bearing upon the matter of his own conduct in going upon the crossing at the time and under the conditions shown by the evidence. The evidence was thereupon admitted. The court was asked to exclude any evidence of the habit of the company to whistle since the accident, but this was denied.

The negligence of the plaintiff is not a bar to a recovery of damages for an injury, where the requirements of the Tennessee statute, heretofore cited, have been disobeyed. In such cases negligence of the plaintiff must operate to mitigate the damages, but does not defeat the action. Western & Atlantic R. Co. v. Roberson, 61 Fed. 592, 9 C. C. A. 646. The evidence admitted tending to show a settled custom to blow at this crossing, if known to the plaintiff, would have some bearing upon the degree of plaintiff's negligence if he undertook to cross without stopping or looking before crossing the track at grade, and under proper instruction guarding against other use was admissible. But it was clearly not competent to show the custom of the company after the collision, for that could have had no influence upon plaintiff's conduct.

For the errors indicated, the judgment must be reversed, and remanded for a new trial.

Digitized by Google

(132 Fed. 434.)

LAMB v. POWDER RIVER LIVE STOCK CO.

(Circuit Court of Appeals, Eighth Circuit. September 5, 1904.)

No. 1,813.

1. STATUTES—CONSTRUCTION—RETROSPECTIVE OPERATION.

The rule that statutes are to be given a prospective, rather than a retrospective, operation, like other rules of interpretation, is resorted to for the purpose of giving effect to the presumed and reasonably probable intention of the Legislature when the terms of the statute do not of themselves make the intention clear, and cannot be invoked to change or defeat the intention when it is made obvious or certain by the terms of the statute.

2. SAME—LIMITATIONS—COLORADO STATUTE.

Act Colo. April 29, 1895 (Sess. Laws 1895, p. 239, c. 106), as amended by Act April 6, 1899 (Sess. Laws 1899, p. 248, c. 113), relating to limitation of actions on foreign judgments, and being a re-enactment, with certain provisos added, of a prior statute, which it in express terms repealed, was intended to apply to actions on judgments rendered prior as well as subsequent to its passage.

3. LIMITATION—ACTIONS ON JUDGMENTS OF OTHER STATES—VALIDITY OF STATUTE.

The power of a state to prescribe a limitation for actions on judgments of the courts of other states, different from that prescribed for actions on judgments rendered within the state, is subject to the fundamental condition that a reasonable time must be given for the exercise of the right of action; otherwise the law is invalid, as in violation of the constitutional provision that no person shall be deprived of property without due process of law.

4. SAME.

The obligation of a contract is not terminated by the rendition of a judgment thereon, but continues until the debt is paid, and a law of a state which unreasonably restricts the time for commencing an action in its own courts for the enforcement of a judgment rendered by a court of another state on an existing contract is unconstitutional as impairing the obligation of the contract.

5. JUDGMENTS—RIGHT TO ENFORCE BY ACTION IN OTHER STATES.

In the courts of other states the judgment of a court of one state is not impeachable except for fraud or want of jurisdiction, is indisputable proof that it rests upon an unanswerable cause of action, is conclusive evidence that the right to its enforcement is wholly unaffected by any laches or lapse of time which preceded its rendition, and gives a right of action for its enforcement, subject to limitation and other laws of the forum which regulate, but do not deny, unreasonably restrict, or oppressively burden, the exercise of that right.

6. LIMITATION—REASONABLE TIME.

A limitation is unreasonable which does not, before the bar takes effect, afford full opportunity for resort to the courts for the enforcement of the rights upon which the limitation is intended to operate; and this opportunity must be accorded in respect of existing rights of action after they come within the present or prospective operation of the statute and in respect of prospective rights after they accrue.

7. SAME—UNREASONABLE LIMITATION—COLORADO STATUTE.

Act Colo. April 29, 1895 (Sess. Laws 1895, p. 239, c. 106), as amended by Act April 6, 1899 (Sess. Laws 1899, p. 248, c. 113), prescribing a general limitation of six years for all actions on judgments rendered without the state, and by provisos declaring that, if the judgment be based on a cause of action which accrued more than six years prior to the commencement of the action on such judgment, the action, if against a bona fide resident

Digitized by Google

of the state, shall be barred unless commenced within three months after the rendition of the judgment sued on, is a law of limitation only in so far as it attempts to interpose a bar because of inaction or laches in enforcing a judgment after it is obtained and a right of action thereon accrues, and is unconstitutional and void, as imposing an unreasonable limitation as applied to an action within the proviso on a judgment of another state based on contract, and rendered prior to the passage of the act upon a cause of action which accrued more than six years before.

In Error to the Circuit Court of the United States for the District of Colorado.

Lamb, a citizen and resident of Nebraska, commenced an action against the live stock company, a Colorado corporation, in the Circuit Court of the United States for the District of Colorado, on February 14, 1901, upon a judgment for the payment of money recovered by him against the company in a court of Nebraska. Defendant answered that it was a bona fide resident of Colorado; that the judgment sued upon was recovered March 4, 1895, more than three months prior to the commencement of the action, and was based upon a cause of action upon an express contract for the sale and delivery of merchandise, which accrued February 1, 1888—more than six years before the present action was commenced. The court sustained this answer under the acts of April 29, 1895, and April 6, 1899 (Sess. Laws Colo. 1895, p. 239, c. 106; Id. 1899, p. 248, c. 113), overruled plaintiff's demurrer thereto, and, plaintiff declining to plead further, rendered judgment for defendant. The act of April 29, 1895, is as follows:

"An act to limit the time in which suits may be brought upon causes of action accrued or judgments or decrees rendered without this state, and to repeal various acts in conflict or inconsistent therewith.

"Be it enacted by the General Assembly of the State of Colorado.

"Section 1. It shall be lawful for any person against whom an action shall be commenced in any court of this state, wherein the cause of action accrued without this state, upon a contract or agreement expressed or implied, or upon a sealed instrument in writing, or upon a judgment or decree rendered in any court without this state, more than six years before the commencement of the action in this state, to plead the same in bar of the action in this state: provided, that if said judgment or decree rendered without this state be based upon a cause of action which had accrued more than six years prior to the commencement of the action on such judgment or decree in this state, and the said judgment or decree had been rendered without this state more than three months prior to the bringing of such action thereon in this state, it shall be lawful for any person against whom any action on such judgment or decree shall be brought, to plead the same in bar thereof; and

"Provided further, that no defendant shall be allowed to plead the fact that the cause of action on which such judgment or decree was based accrued more than six (6) years, and that such judgment or decree was rendered without this state more than three (3) months before the commencement of said action thereon in this state, unless the defendant shall be a bona fide resident of this state.

"Sec. 2. Section 16 of chapter 60 of the General Laws of 1877, concerning limitations; also, section 1 of an act entitled 'An act concerning limitations of actions in the courts of justice,' approved February 14, 1879; also, section No. 2178 of the General Statutes of the State of Colorado, the same being section 16 of chapter LXVI, and all other acts or parts of acts in conflict with this act, be and the same are hereby repealed."

"Approved April 29, 1895."

The act of April 6, 1899, adds a third or additional proviso to the first section of the prior act, and is styled an amendatory act in both its title and its body.

The statutes expressly repealed by the act of 1895 had theretofore prescribed the time within which the actions named in that act could be commenced. For sixteen years the period for suing upon a judgment or decree

Digitized by Google

of any kind rendered without the state had been six years. The judgment sued upon was rendered less than two months before the act of 1895 was passed, and the cause of action upon which it is based accrued more than six years before the judgment was rendered. When the action in which the judgment was recovered was brought does not appear. The present action was commenced more than three months after the act of 1895 took effect, and within six years after the judgment was rendered.

T. M. Morrow (William T. Skelton, on the brief), for plaintiff in error.

E. E. Edmonds (J. C. Helm, on the brief), for defendant in error.

Before SANBORN, VAN DEVANTER, and HOOK, Circuit Judges.

VAN DEVANTER, Circuit Judge, after stating the facts as above, delivered the opinion of the court.

No change in the statute law of Colorado was made by the act of April 6, 1899 (Sess. Laws 1899, p. 248, c. 113). In form and in purpose it was an amendatory act conforming to the requirement of the state Constitution (article 5, § 24) that when a law is amended it shall be re-enacted and published at full length. It re-enacted the act of April 29, 1895 (Sess. Laws 1895, p. 239, c. 106) without other change than to add a third proviso at the end of the first section. For reasons not material to the present inquiry, the added proviso is void, as held by this court in Keyser v. Lowell, 54 C. C. A. 574, 117 Fed. 400. The other provisions continued in force without interruption from the time when the earlier act took effect, and are to be considered as speaking from that date, instead of from the time of their re-enactment.

Was the shortened limitation in the act of 1895 intended to apply to actions upon judgments theretofore rendered? One contention of the plaintiff in error is that it must be given a prospective operation, and that to apply it to causes of action which accrued before it became effective is to permit it to operate retrospectively. The rule that statutes are to be given a prospective, rather than a retrospective, operation, is well recognized; but, like other rules of interpretation, it is resorted to to give effect to the presumed and reasonably probable intention of the Legislature, when the terms of the statute do not of themselves make the intention certain or clear, and cannot be invoked to change or defeat the intention when it is made obvious or manifest by the terms of the statute. Sohn v. Waterson, 17 Wall. 596, 21 L. Ed. 737; Stephens v. Cherokee Nation, 174 U. S. 445, 477, 19 Sup. Ct. 722, 43 L. Ed. 1041; Webster v. Cooper, 14 How. 488, 501, 14 L. Ed. 510. The act of 1895 contains internal and convincing evidence of the intention with which it was enacted. It is identical in its provisions with one of the statutes which it in terms repealed (section 2178, Gen. St. 1883), save that by two provisos it reduces, in some instances to three months, the period within which an action may be commenced upon a judgment rendered without the state upon a cause of action accruing more than six years before the commencement of the action upon the judgment. This repeal and re-enactment of all of the provisions of the existing statute by a single act, and with no other change than the addition of the two provisos, should be given the same effect that would be given to an amend-

Digitized by Google

atory act accomplishing the same purpose. The re-enactment neutralized the repeal, and the new act should be construed as continuing in force the prior statute with such modification as was effected by the addition of the provisos. Bear Lake Irrigation Co. v. Garland, 164 U. S. 1, 11, 17 Sup. Ct. 7, 41 L. Ed. 327; Sutherland on Statutory Construction, § 134. The causes of action named in the prior statute, other than upon a judgment rendered without the state upon a cause of action accruing more than six years before the commencement within the state of an action upon the judgment, were no more affected by the act of 1895 than if it had not been enacted. The modification or change is limited to actions upon a specified class of judgments. The provisos are broad enough in their language to readily embrace every subsequent action upon a judgment of this class, no matter when rendered, and the act expressly repeals the existing statute regulating the time for commencing such actions. It is hardly conceivable that when the Legislature was thus materially shortening the period of limitation it would have removed existing judgments from all limitation. Nor did the adoption of a new period of limitation in respect of future judgments require the complete abrogation of the old limitation, unless it was intended that the new one should apply to existing judgments.

Not infrequently in adopting new statutes of limitation special provision is expressly made for enforcing existing rights of action, but a provision of that character was not needed in this instance. Under the Constitution of the state (article 5, § 19) the act of 1895, which contained no emergency clause, would not take effect for 90 days after its passage; a period which is practically the equivalent of the shortest limitation prescribed in the act. According to the decisions of many courts, a statute of limitation, the operation of which is postponed to an appointed time in the future, is effectual from the date of its enactment as public notice of its provisions and prospective operation, and, if it be not otherwise provided, operates to fix or designate the time which will elapse between its passage and its taking effect as the period within which to begin proceedings for the enforcement of such existing rights of action as will fall within the bar of the statute when it takes effect. Stine v. Bennett, 13 Minn. 153 (Gil. 138); Russell v. Akeley Lumber Co., 45 Minn. 376, 48 N. W. 3; Duncan v. Cobb, 32 Minn. 460, 21 N. W. 714; Holcombe v. Tracy, 2 Minn. 241 (Gil. 201); Smith v. Morrison, 22 Pick. 430; Peirce v. Tobey, 5 Metc. (Mass.) 168; Bigelow v. Bemis, 2 Allen, 496; Korn v. Browne, 64 Pa. 55; Clay v. Iseminger, 187 Pa. 108, 41 Atl. 38, affirmed 185 U. S. 55, 22 Sup. Ct. 573, 46 L. Ed. 804; Hedger v. Rennaker, 3 Metc. (Ky.) 255; Lockhart v. Yeiser, 2 Bush, 231; Eaton v. Supervisors, 40 Wis. 668; Horbach v. Miller, 4 Neb. 31; Wrightman v. Boone County (C. C.) 82 Fed. 412; Merchants' National Bank v. Braithwaite, 7 N. D. 358, 372, 75 N. W. 244, 66 Am. St. Rep. 653; Osborne v. Lindstrom, 9 N. D. 1, 8, 81 N. W. 72, 46 L. R. A. 715, 81 Am. St. Rep. 516. In the opinion of other courts such a statute does not effectually charge any person with notice of its provisions, or have effect in any other way, until the time appointed for it to go into full operation. Price v. Hopkin, 13 Mich. 318; Gilbert v. Ackerman, 159 N. Y. 118, 53 N. E. 753, 45 L. R. A. 118; Sutherland on Statutory Construction, § 107. The Supreme

Digitized by Google

Court of Colorado does not seem to have spoken upon the question, and we do not deem it necessary to consider which of the opposing views is the better one, because both lead to the same ultimate conclusion in this case. If the act of 1895 was not effectual as notice to holders of existing judgments in advance of the time appointed for it to take effect, then the new period of limitation did not commence to run against proceedings to enforce such judgments prior to that time. Lewis v. Lewis, 7 How. 776, 12 L. Ed. 909; Sohn v. Waterson, 17 Wall. 596, 21 L. Ed. 737. Thus one of two things resulted from that act: either the plaintiff was charged on the day of its enactment with notice of its prospective operation, and was restricted to the ninety days which would elapse before it would take effect in commencing an action upon his judgment, or he was charged on the day the act took effect with notice of its provisions, and was restricted to a period of three months thereafter in exercising his right of action. It is plain that in point of the length of the period limited for commencing actions thereon no discrimination was made between existing and future judgments. If it was reasonable to limit the right to sue upon a future judgment to a period of three months after its rendition, it was equally reasonable to limit the right to sue upon an existing judgment to a period of ninety days or three months after the time when its holder became charged with notice of the provisions of the act and was thereby put to his remedy. We think the shortened limitation was intended to apply to actions upon existing judgments, and that, if that limitation is valid, plaintiff's right of action was barred ninety days after the passage of the act of 1895, or three months after it took effect, depending upon when he was put to his remedy by the act.

In what has been said the validity of the shortened limitation has been assumed. It is now necessary to inquire whether or not a state may thus restrict the right to sue in her courts upon a judgment for the payment of money rendered in a court of a sister state upon a cause of action founded upon contract. It is elementary that statutes of limitation are part of the law of the forum. State statutes of that character may embrace causes of action upon contracts made or judgments rendered in other states, may prescribe a period of limitation in respect of them that is different from that prescribed in respect of similar rights of action arising within the state, and may subject existing rights of action to a limitation where none existed before, or to a shorter limitation than existed when they accrued (McElmoyle v. Cohen, 13 Pet. 312, 327, 10 L. Ed. 177; Bank v. Dalton, 9 How. 522, 13 L. Ed. 242; Terry v. Anderson, 95 U. S. 628, 633, 24 L. Ed. 365; Hawse v. Burgmire, 4 Colo. 313); but the power to enact such statutes is subject to the fundamental condition that a reasonable time must be given for the exercise of the right of action, whether existing or prospective, after it comes within the prospective or present operation of the statute, and before the bar becomes effective (Keyser v. Lowell, 54 C. C. A. 574, 578, 580, 117 Fed. 400, 404, 406; Jackson v. Lamphire, 3 Pet. 280, 290, 7 L. Ed. 679; Hawkins v. Barney, 5 Pet. 457, 466, 8 L. Ed. 190; Bronson v. Kinzie, 1 How. 311, 316, 11 L. Ed. 143; Christmas v. Russell, 5 Wall. 290, 300, 18 L. Ed. 475; Curtis v. Whitney, 13 Wall. 68, 72, 20 L. Ed. 513; Sohn v. Waterson, 17 Wall. 596, 21 L. Ed. 737;

Digitized by Google

Terry v. Anderson, 95 U. S. 628, 632, 24 L. Ed. 365; Edwards v. Kearzey, 96 U. S. 595, 603, 24 L. Ed. 793; Koshkonong v. Burton, 104 U. S. 668, 675, 26 L. Ed. 886; Vance v. Vance, 108 U. S. 514, 2 Sup. Ct. 854, 27 L. Ed. 808; McGahey v. Virginia, 135 U. S. 662, 707, 10 Sup. Ct. 972, 34 L. Ed. 304; Wheeler v. Jackson, 137 U. S. 245, 255, 11 Sup. Ct. 76, 34 L. Ed. 659; Turner v. New York, 168 U. S. 90, 94, 18 Sup. Ct. 38, 42 L. Ed. 392; Saranac Land & Timber Co. v. Comptroller, 177 U. S. 318, 20 Sup. Ct. 642, 44 L. Ed. 786; Wilson v. Iseminger, 185 U. S. 55, 62, 22 Sup. Ct. 573, 46 L. Ed. 804; Price v. Hopkin, 13 Mich. 318, 324; Gilbert v. Ackerman, 159 N. Y. 118, 124, 53 N. E. 753, 45 L. R. A. 118; Berry v. Ransdall, 4 Metc. [Ky.] 292; Small v. Foley, 8 Colo. App. 435, 450, 47 Pac. 64, 70). In the case last cited Judge Thompson, speaking for the Court of Appeals of Colorado, said:

"The Legislature may shorten the time by which actions on existing contracts will be barred, provided it does not fix the limitation so as to cut off the right of action on demands against which the former statute had not run, or does not unreasonably shorten the time within which suit may be brought on such demands. With these limitations such legislation, although retroactive, will be sustained."

Perhaps no better rule as to what is a reasonable time can be laid down than that it must be of sufficient duration to afford full opportunity for resort to the courts for the enforcement of the rights upon which the limitation is intended to operate. In the words of Mr. Justice Shiras in Wilson v. Iseminger, supra:

"A statute could not bar the existing rights of claimants without affording this opportunity. If it should attempt to do so, it would not be a statute of limitations, but an unlawful attempt to extinguish rights arbitrarily, whatever might be the purport of its provisions."

To the same effect is Price v. Hopkin, supra, where it was said by Judge Cooley:

"It is of the essence of a law of limitation that it shall afford a reasonable time within which suit may be brought; * * * and a statute that fails to do this cannot possibly be sustained as a law of limitation, but would be a palpable violation of the constitutional provision that no person shall be deprived of property without due process of law."

Not only is a right of action which springs from contract property within the protection of the fourteenth amendment to the national Constitution, but any state statute which denies, unreasonably restricts, or oppressively burdens the exercise of a right of action springing from a prior contract, impairs its obligation within the prohibition of the Constitution. Article 1, § 10. The obligation of a contract consists in the binding force of its stipulations upon those who make them, and depends upon the continued existence of a means of enforcing its stipulations; otherwise a contract would be without obligation, and would have only such effect as the parties should choose to give it. Every lawful contract gives rise to a right in one party to require performance of the stipulations of the other, and to a corresponding duty of the other to perform them. A subsequent law of a state which denies or diminishes the right of the one or excuses or discharges the other from the performance of his duty impairs the obligation of the

Digitized by Google

contract, although professing to act only upon the remedy. Sturges v. Crowninshield, 4 Wheat. 122, 197, 4 L. Ed. 529; Bronson v. Kinzie, 1 How. 311, 316, 320, 11 L. Ed. 143; McCracken v. Hayward, 2 How. 608, 612, 11 L. Ed. 397; Edwards v. Kearzey, 96 U. S. 595, 603, 607, 24 L. Ed. 793; Barnitz v. Beverly, 163 U. S. 118, 122, 16 Sup. Ct. 1042, 41 L. Ed. 93. A judgment for the amount due upon a contract does not terminate its obligation because it does not pay the debt. The debt remains contractual in character, and its payment is as much within the obligation of the contract after the judgment as it was before. Black's Constitutional Law (2d Ed.) p. 615; Freeman on Judgments (4th Ed.) § 4; Sprott v. Reid, 3 G. Greene, 489, 56 Am. Dec. 549. If the subsequent law, instead of directly abrogating the contract, unreasonably restricts or oppressively burdens the enforcement of a judgment rendered thereon it is none the less obnoxious to the constitutional prohibition (Daniels v. Tearney, 102 U. S. 415, 419, 26 L. Ed. 187) which is directed against all impairment of the obligation of contracts by state legislation, no matter in what form attempted. In delivering the opinion of the court in Bronson v. Kinzie, supra, Chief Justice Taney said of this prohibition:

> "It was undoubtedly adopted as a part of the Constitution for a great and useful purpose. It was to maintain the integrity of contracts, and to secure their faithful execution throughout the Union by placing them under the protection of the Constitution of the United States. And it would but ill become this court, under any circumstances, to depart from the plain meaning of the words used, and to sanction a distinction between the right and the remedy, which would render this provision illusive and nugatory; mere words of form affording no protection and producing no practical result."

A judgment of a state court cannot be enforced out of the state by execution issued within the state, nor can execution be issued thereon without the state; but this does not mean that there is no means of enforcing a judgment out of the state in which it is obtained. It can be enforced in another state by action brought in a court of that state. McElmoyle v. Cohen, 13 Pet. 312, 325, 10 L. Ed. 177. While the original cause of action is merged in the judgment, and cannot be made the basis of another action, a right of action arises upon the judgment which can be exercised in other states as a means of obtaining payment of the debt. If the judgment is obtained as a means of enforcing a contract, the subsequent proceedings in another state are equally a means of its enforcement, although their apparent and more immediate purpose is to compel satisfaction of the judgment. When the contract upon which the Nebraska judgment is founded was entered into, this right to enforce a judgment obtained in a court of one state in the courts of the several states was part of the law of the land. It was expressly recognized by the law of Colorado, which limited the time for commencing an action in the exercise of the right to a period of six years. The law establishing this right became part of the obligation of the contract in the enforcement of which the judgment sued upon was obtained. While continuing the recognition of this right, the act of 1895 shortened the period for commencing actions upon a class of judgments, including that of plaintiff, to a period of three months. Of the application of the contract clause of the Constitution to a statute of limitation Mr. Justice

Digitized by Google

Swayne said, in speaking for the court in Edwards v. Kearzey, 96 U. S. 595, 603, 24 L. Ed. 793:

"Statutes of limitation are statutes of repose. They are necessary to the welfare of society. The lapse of time constantly carries with it the means of proof. The public as well as individuals are interested in the principle upon which they proceed. They do not impair the remedy, but only require its application within the time specified. If the period limited be unreasonably short, and designed to defeat the remedy upon pre-existing contracts, which was part of their obligation, we should pronounce the statute void; otherwise we should abdicate the performance of one of our most important duties."

The Constitution declares that "full faith and credit shall be given in any state to the public acts, records and judicial proceedings of every other state" (Const. U. S. art. 4, § 1), and the act of Congress of May 26, 1790, provides that the records and judicial proceedings of each state "shall have such faith and credit given to them in every court within the United States as they have by law or usage in the courts of the state from which they have been taken." 1 Stat. 122, c. 11; Rev. St. § 905. The effect of these provisions is that in the courts of other states the judgment of a court of one state is not impeachable except for fraud or want of jurisdiction (neither of which is here suggested), is indisputable proof that it rests upon an unanswerable cause of action, is conclusive evidence that the right to its enforcement is wholly unaffected by any laches or lapse of time which preceded its rendition, and gives a right of action for its enforcement subject to limitation and other laws of the forum which regulate, but do not deny, unreasonably restrict, or oppressively burden the exercise of that right. Keyser v. Lowell, 54 C. C. A. 574, 117 Fed. 400; Christmas v. Russell, 5 Wall. 290, 18 L. Ed. 475.

Thus, from whatever point the shortened limitation in the act of 1895 is considered, the question arises whether it is reasonable. No reported decision has come under our observation which sustains a like limitation. The following cases sustain limitations of approximately the periods named: Terry v. Anderson, 95 U. S. 628, 24 L. Ed. 365, nine and one-half months; Vance v. Vance, 108 U. S. 245, 2 Sup. Ct. 854, 27 L. Ed. 808, eight and one-half months; Wheeler v. Jackson, 137 U. S. 245, 11 Sup. Ct. 76, 34 L. Ed. 659, six months; Turner v. New York, 168 U. S. 90, 18 Sup. Ct. 38, 42 L. Ed. 392, six months; Stine v. Bennett, 13 Minn. 153 (Gil. 138), four and one-half months; Russell v. Akeley Lumber Co., 45 Minn. 376, 48 N. W. 3, six months; Bigelow v. Bemis, 2 Allen, 496, five months; Smith v. Packard, 12 Wis. 371, eight and one-half months; Cameron v. Louisville, etc., Ry. Co., 69 Miss. 78, 10 South. 554, one year; Horbach v. Miller, 4 Neb. 31, four and one-half months; Myers v. Wheelock, 60 Kan. 747, 57 Pac. 956, six months; Power v. Kitching, 10 N. D. 254, 86 N. W. 737, 88 Am. St. Rep. 691, seven months. In McGahey v. Virginia, 135 U. S. 662, 708, 10 Sup. Ct. 972, 34 L. Ed. 304, a limitation of one year was declared unreasonable, and in Berry v. Ransdall, 4 Metc. (Ky.) 292, the same was said of a limitation of thirty days. In Bank v. Braithwaite, 7 N. D. 358, 372, 75 N. W. 244, 66 Am. St. Rep. 653, it was doubted whether three and one-half months was a reasonable time, but thirteen months was pronounced reasonable. No useful purpose would be

Digitized by Google

served by referring more particularly to the limitations which were sustained or rejected in these cases. It is sufficient to say that all of them recognize the true rule to be that a limitation is unreasonable which does not, before the bar takes effect, afford full opportunity for resort to the courts for the enforcement of the rights upon which the limitation is intended to operate, and that this opportunity must be afforded in respect of existing rights of action after they come within the present or prospective operation of the statute and in respect of prospective rights after they accrue.

It is usual in prescribing periods of limitation to adjust the time to the special nature of the rights of action to be affected, the situation of the parties, and other surrounding circumstances. A single period cannot be fixed for all cases, because what would be reasonable in one class of cases would be entirely unreasonable in another. Each limitation must, therefore, be separately judged in the light of the circumstances surrounding the class of cases to which it applies, and, if the time is reasonable in respect of the class, it will not be adjudged unreasonable merely because it is deemed to operate harshly in some particular or exceptional instance; as where the person against whose right the limitation runs is under some disability, out of the state, or unavoidably prevented from suing within the time prescribed. Vance v. Vance, 108 U. S. 514, 521, 2 Sup. Ct. 854, 27 L. Ed. 808; Bank v. Dalton, 9 How. 522, 528, 13 L. Ed. 242; Amy v. Watertown, 130 U. S. 320, 9 Sup. Ct. 537, 32 L. Ed. 953. An examination of the act of 1895, which is copied at length in the statement preceding this opinion, shows that it first prescribes a general limitation of six years upon all actions upon judgments rendered without the state, and then, by two provisos or excepting clauses, declares that, if the judgment be based upon a cause of action which accrued more than six years prior to the commencement of the action upon the judgment, and if the judgment shall have been rendered more than three months prior to the bringing of the action, the defendant, if a bona fide resident of the state, may plead these facts in bar of the action. The concurrence of three things makes the bar effective: (1) Defendant's bona fide residence in the state; (2) the lapse of six years after the accrual of the cause of action upon which the judgment is based; (3) the lapse of three months after the rendition of the judgment. The purpose and effect of this special limitation would be more easily appreciated, but not altered, if the provision had been: "No action shall be maintained against a bona fide resident of this state upon a judgment rendered without the state unless the action thereon be commenced within six years after the accrual of the cause of action upon which the judgment is based, save that in no case shall the right of action be barred until three months after the rendition of the judgment." The result would also be the same if it had been declared: "No action shall be maintained against a bona fide resident of this state upon a judgment rendered without the state unless the action be commenced within three months after the judgment is rendered, save that in no case shall the right of action be barred until after six years from the accrual of the cause of action upon which the judgment is based." A right of action does not accrue upon a judgment until it is rendered, and, of course, the right cannot be exercised until it

Digitized by Google

accrues. The purpose of statutes of limitation is to compel the exercise of rights of action within a reasonable time after they accrue and before the evidence upon which their enforcement or resistance depends is lost, rendered difficult of production, or impaired by lapse of time. Nothing could be more unreasonable or more certainly violative of constitutional prohibitions than to bar rights of action because of the lapse of time prior to their accrual, when they could not have been exercised. Yet the bar of this special limitation is in all cases rested partly, and in some almost entirely, upon the lapse of time prior to the rendition of the judgment, when the right of action had not accrued. This portion of the act of 1895 is a law of limitation only as it attempts to interpose a bar because of inaction or laches in enforcing a judgment after it is obtained. It is unique in that it does not prescribe a fixed or definite time for commencing the actions to which it applies. Where the limitation begins to run more than five years and nine months after the accrual of the cause of action upon which the judgment is based, the action is barred if not brought in three months. Where the judgment is obtained upon the day when the original cause of action accrues, as it may be by confession or consent, the action upon the judgment is not barred for six years. Thus the period within which the bar becomes effective ranges all the way from three months to six years, and this is equally true of judgments existing at the time and of those subsequently rendered. At what time within these limits any particular action is barred depends upon the special facts of the case. The longest period is reasonable, and the shortest is altogether unreasonable. In these circumstances it may become a serious question whether the entire provision falls as wanting in the requisites of a law of limitation, or whether, as respects the various intermediate periods, every man must determine for himself and at his peril whether the time allowed for exercising his right of action is reasonable (Ludwig v. Stewart, 32 Mich. 27; Osborne v. Lindstrom, 9 N. D. 1, 9, 81 N. W. 72, 46 L. R. A. 715, 81 Am. St. Rep. 516), but the consideration of that question is not essential to the decision of the present case.

Our reasons for pronouncing the three-months limitation unreasonable are these: It is not founded upon any proper regard for the interests of the community or of judgment debtors, or for the nature of the actions affected, and it does not afford judgment creditors full or sufficient opportunity for recourse to the courts for the enforcement of their judgments. Before an action upon a judgment recovered in one state can be brought in a court of another state, it is necessary to ascertain that the debtor, or property of his, is there, to discover in what county or court the action must be brought, and to obtain the assistance of counsel. This is usually accomplished through letter correspondence, and that requires time. A creditor cannot be expected or required, immediately upon obtaining a judgment against his debtor, or immediately upon a change in the existing statute of limitations, to devote his entire time and attention to the enforcement of the judgment, to the exclusion of his other affairs and duties. Nor does a just regard for the interests of the debtor require it. The latter's interests will be better served if he has a reasonable opportunity to satisfy the judgment without further proceedings or expense. No presump-

Digitized by Google

tion necessarily or immediately arises that he will not do so. There is little danger that the evidence to sustain the enforcement or resistance of a judgment will be lost, rendered difficult of production, or impaired within so brief a period as three months. A judgment does not become a stale demand within that time, and there is no laches in so short a postponement of its enforcement.

The judgment is reversed, with a direction to sustain the demurrer to the answer.

(132 Fed. 444.)

GORDON v. WARE NAT. BANK OF WARE, MASS.

(Circuit Court of Appeals, Eighth Circuit. August 22, 1904.)

No. 1,995.

1. LIFE INSURANCE—INSURABLE INTEREST—REQUISITE TO VALIDITY.

The issue of a policy of life insurance to one who has no interest as a relative, dependent, creditor, or otherwise, in the life of the insured, and who pays the premiums for the chance of recovering upon the policy, is against public policy, and the contract is void, because the interest of the holder is to shorten, rather than to lengthen, the life of the insured, and his maintenance of the policy is of the nature of a wager.

2. SAME—CREDITOR HAS INSURABLE INTEREST.

A creditor has an insurable interest in the life of his debtor, and the issue or pledge of a policy upon his life as collateral security for the payment of his debt is valid.

3. SAME—NECESSITY OF INSURABLE INTEREST IN ASSIGNEE—QUESTION OF GENERAL LAW.

The question whether or not an insurable interest in an assignee is requisite to the validity of the assignment of a policy of life insurance, which was originally issued to one who had an insurable interest, is a question of general law, upon which the decisions of the courts of the state in which the assignment was made are not controlling in the federal courts.

4. SAME—ASSIGNMENT VALID WITHOUT INSURABLE INTEREST IN ASSIGNEE.

An insurable interest in the assignee is not requisite to the validity of the assignment of a policy of life insurance which was lawfully issued to one who had such an interest, unless the assignment was made in bad faith as a cover for the issue of a wager policy. But the use of an assignment immediately upon the issue of a policy to evade the rule that the issue of a policy to one without an insurable interest renders it void avoids the assignment.

5. SAME—PLEDGEE OF POLICY MAY SELL TO ONE WITHOUT INSURABLE INTEREST.

The pledgee of a policy of life insurance has the right and power to sell the policy to the highest bidder for the purpose of realizing money to pay the debt which it secures, and both immediate and remote assignees under such a sale take good title to the policy and to its proceeds, although they have no insurable interest in the life insured by the policy.

6. JUDGMENT—RES ADJUDICATA.

In an action between the same parties or between those in privity with them, a prior judgment on the merits upon the same claim or demand by a court which had jurisdiction, is conclusive, whether right or wrong, not only of every matter offered, but of every admissible matter which might have been offered to sustain or defeat the claim or demand.

(Syllabus by the Court.)

¶ 2. See Insurance, vol. 28, Cent. Dig. §§ 162, 166.

What constitutes an insurable interest in human life, see note to Manhattan Life Ins. Co. v. Hennessy, 39 C. C. A. 632.

Digitized by Google

In Error to the Circuit Court of the United States for the District of Kansas.

This action involves a controversy over the ownership of the proceeds of a policy of insurance between the administrator of the estate of Melissa A. Gordon, the plaintiff, and the Ware National Bank, the defendant. The insurance company admitted its liability, and paid into the court below the amount owing upon the policy, which insured the life of William Gordon for $5,000. All the premiums required to be paid by this policy had been paid by Gordon before the year 1879. The amount promised by the policy was payable upon the death of William Gordon to his wife, Melissa A. Gordon, if living; otherwise to the children of William Gordon. Gordon died on March 6, 1902, leaving his wife and two children surviving. Melissa A. Gordon died on March 14, 1902, so that, if Melissa Gordon was not deprived of all interest in the policy by the facts which are about to be stated, her administrator, the plaintiff, is entitled to recover its proceeds. On June 11, 1879, William Gordon and Melissa A. Gordon, his wife, assigned the policy to the German Bank of Leavenworth, Kan., as collateral security for the payment of loans made by it to William Gordon. On May 8, 1882, the German Bank brought an action in the district court of Leavenworth county, in the state of Kansas, against William Gordon and Melissa A. Gordon to foreclose the pledge of the policy by a sale of it and the application of the proceeds to the payment of a debt of $8,217.01, which was then owing by William Gordon to the bank. The Gordons appeared in that action, admitted that the indebtedness of William Gordon to the bank was $8,217.01, and that they had pledged the policy to secure the payment of this debt, and they consented to an immediate trial of the action without making any farther defense. Thereupon the court tried the case, and rendered a decree that the bank should recover of William Gordon $8,217.01; that the policy of insurance should be advertised and sold; that the proceeds of the sale should be applied to the payment of the debt of William Gordon to the bank; and that the defendants William Gordon and Melissa A. Gordon were "forever barred of and from having or claiming any lien upon or interest in or to" the policy after its sale. Under an execution issued upon this judgment the policy was sold by the sheriff to the German Bank for $150, and it was subsequently assigned for value by the German Bank, through several mesne conveyances, to the defendant, the Ware National Bank. Neither the Ware National Bank nor any of the assignees through whom the policy passed from the German Bank to it was a creditor of William Gordon, or had any interest in his life. The Ware National Bank claimed the proceeds of the policy as the remote assignee of the German Bank. The plaintiff, the administrator of the estate of Melissa A. Gordon, demanded these proceeds upon the ground that the assignees of the German Bank had no insurable interest in the life of Gordon, and that for this reason the assignments to them were void, and the policy remained the property of Melissa A. Gordon when she died. The court below sustained the claim of the Ware National Bank, and rendered a judgment in its favor.

John H. Atwood (William W. Hooper, on the brief), for plaintiff in error.

James H. Cravens (Lucien Baker and E. B. Baker, on the brief), for defendant in error.

Before SANBORN and VAN DEVANTER, Circuit Judges, and AMIDON, District Judge.

SANBORN, Circuit Judge, after stating the case as above, delivered the opinion of the court.

The issue of a policy of insurance to one who has no interest as a relative, dependent, creditor, or otherwise, in the life insured, and who pays the premiums for the chance of recovering upon the policy, is against the public policy of this nation, and void, because the interest

Digitized by Google

of the holder of the policy is to shorten, rather than to lengthen, the life insured, and his maintenance of the policy is of the nature of a wager. Evasions of this rule by the issue of a policy to one who has an insurable interest, and its immediate assignment, pursuant to a preconceived intent, to one without such an interest, who undertakes to pay the premiums for his chance of profit upon his investment, are equally ineffective, and such assignments are void. Connecticut Mutual Life Ins. Co. v. Schaefer, 94 U. S. 457, 461, 24 L. Ed. 251; Cammack v. Lewis, 15 Wall. 643, 21 L. Ed. 244; Warnock v. Davis, 104 U. S. 775, 782, 26 L. Ed. 924. A creditor has an insurable interest in the life of his debtor, and a policy on the latter's life issued to him, or issued to one who has an insurable interest in the life of the debtor and subsequently assigned to him, is valid and enforceable in his hands. Connecticut Mutual Life Ins. Co. v. Schaefer, 94 U. S. 457, 461, 24 L. Ed. 251; Warnock v. Davis, 104 U. S. 775, 778, 26 L. Ed. 924.

Counsel for the plaintiff insist that the Supreme Court of the state of Kansas has determined that every assignment of an insurance policy is void unless the assignee has an insurable interest in the life protected, and that this decision is controlling in the federal courts, because the assignments here in question were executed in the state of Kansas. But the question whether or not an insurable interest in an assignee of a policy issued to one who had such an interest is indispensable to the validity of the assignment of it is a question of general law, which it would be a dereliction of duty for a federal court to decline to consider and determine for itself. The opinion of the court of the state in which the assignment is executed upon this question is not controlling in a national court. Hartford Fire Ins. Co. v. Chicago, M. & St. P. Ry. Co., 70 Fed. 201, 203, 17 C. C. A. 62, 65, 30 L. R. A. 193; Speer v. Board, 88 Fed. 749, 762, 32 C. C. A. 101, 114; Clapp v. Otoe County, 104 Fed. 473, 477, 45 C. C. A. 579, 582.

There is some conflict of authority among the courts of the states upon the question whether or not the assignment of a policy for value in good faith by one who has an insurable interest to one who has not such an interest is valid. The Supreme Court of Indiana, in the case of Franklin Life Ins. Co. v. Hazzard, 41 Ind. 116, 13 Am. Rep. 313, declared that such an assignment was as obnoxious to the rule against wager policies as the issue of a policy to one without interest, and that it was void. The courts of the states of Alabama, Kansas, Kentucky, Missouri, North Carolina, Pennsylvania, Texas, and Virginia have followed this declaration. Alabama Gold Mutual Life Ins. Co. v. Mobile Mutual Life Ins. Co., 81 Ala. 329, 1 South. 561; Helmetag's Adm'r v. Miller, 76 Ala. 183, 52 Am. Rep. 316; Missouri Valley Life Ins. Co. v. Sturges, 18 Kan. 93, 26 Am. Rep. 761; Missouri Valley Life Ins. Co. v. McCrum, 36 Kan. 146, 59 Am. Rep. 537, 12 Pac. 517; Price v. First Nat. Bank, 62 Kan. 743, 64 Pac. 639; Schlamp v. Berner's Adm'r, 21 Ky. Law Rep. 324, 51 S. W. 312; Burnam v. White, 16 Ky. Law Rep. 241, 22 S. W. 555; Heusner v. Mutual Life Ins. Co., 47 Mo. App. 336; Powell v. Dewey, 123 N. C. 103, 68 Am. St. Rep. 818, 31 S. E. 381; Downey v. Hoffer, 110 Pa. 109, 20 Atl. 655; Gilbert v. Moose's Adm'r, 104 Pa. 74, 49 Am. Rep. 570; Cheeves v. Anders, 87 Tex. 287, 47 Am. St. Rep. 107, 28 S. W. 274; Schonfield v. Turner,

Digitized by Google

75 Tex. 324, 12 S. W. 626, 7 L. R. A. 189; Long v. Meriden Brittania Co., 94 Va. 594, 27 S. E. 499. The reason for this view that the assignee who pays the premium practically wagers it upon the early close of the life insured has much less force where, as in the case at bar, the premiums have ben paid before the assignment is made. Connecticut Mutual Life Ins. Co. v. Schaefer, 94 U. S. 457, 462, 24 L. Ed. 251; Bursinger v. Bank of Watertown, 67 Wis. 75, 83, 30 N. W. 290, 58 Am. Rep. 848. The rule adopted by these states greatly detracts from the value of life insurance policies, and restricts their commercial value; for, if their possible purchasers are limited to those who have insurable interests in the lives they insure, it is obvious that buyers will be few, and their commercial value and the traffic in them must be much less than if all men may become their lawful purchasers. In view of this fact the Supreme Court of the United States and the courts of the great commercial communities of this country—of New York, Ohio, Massachusetts, Illinois, Michigan, New Jersey, California, Minnesota, Connecticut, Louisiana, Rhode Island, Wisconsin, Nebraska, Tennessee, South Carolina, Mississippi, and Maryland—have repudiated the old declaration of the Supreme Court of Indiana, and have adopted the more modern and rational rule that "any person has a right to procure an insurance on his own life, and to assign it to another, provided it be not done by way of cover for a wager policy." Ætna Life Ins. Co. v. France, 94 U. S. 561, 564, 24 L. Ed. 287; New York Mutual Life Ins. Co. v. Armstrong, 117 U. S. 591, 597, 6 Sup. Ct. 877, 29 L. Ed. 997; Chamberlain v. Butler, 61 Neb. 730, 738, 86 N. W. 481; Crosswel v. Connecticut Indemnity Association, 51 S. C. 103, 28 S. E. 200, 203; Bursinger v. Bank of Watertown, 67 Wis. 75, 83, 85, 30 N. W. 290, 58 Am. Rep. 848; St. John v. Ins. Co., 13 N. Y. 31, 40, 64 Am. Dec. 529; Valton v. Ins. Co., 20 N. Y. 32, 38; Olmsted v. Keyes, 85 N. Y. 593, 598; Steinback v. Diepenbrock, 37 N. Y. Supp. 279, 280, 1 App. Div. 417; Eckel v. Renner, 41 Ohio St. 232, 233; Mutual Life Ins. Co. v. Allen, 138 Mass. 24, 31, 52 Am. Rep. 245; Dixon v. National Life Ins. Co., 168 Mass. 48, 49, 46 N. E. 430; Brown v. Greenfield Life Association, 172 Mass. 498, 502, 53 N. E. 129; Martin v. Stubbings, 126 Ill. 387, 18 N. E. 657, 660, 9 Am. St. Rep. 620; Prudential Ins. Co. v. Liersch, 122 Mich. 436, 81 N. W. 258; Trenton, &c., Ins. Co. v. Johnson, 24 N. J. Law, 576, 585; Vivar v. Knights of Pythias, 52 N. J. Law, 455, 469, 20 Atl. 36, 41; Curtiss v. Ætna Life Ins. Co., 90 Cal. 245, 27 Pac. 211, 25 Am. St. Rep. 114; Widaman v. Hubbard (C. C.) 88 Fed. 806, 814; Hogue v. Minnesota Packing & Provision Co., 59 Minn. 39, 43, 60 N. W. 812; Brown v. Equitable Life Assur. Soc., 75 Minn. 412, 78 N. W. 103, 671, 79 N. W. 968; Fitzgerald v. Hartford, etc., Ins. Co., 56 Conn. 116, 13 Atl. 673, 677, 678, 17 Atl. 411, 7 Am. St. Rep. 288; Succession of Hearing, 26 La. Ann. 326, 327; Clark v. Allen, 11 R. I. 439, 443, 23 Am. Rep. 496; Strike v. Wisconsin, etc., Ins. Co., 95 Wis. 583, 70 N. W. 819, 820; Clement v. N. Y. Life Ins. Co., 101 Tenn. 22, 46 S. W. 561, 564, 42 L. R. A. 247, 70 Am. St. Rep. 650; Murphy v. Red, 64 Miss. 614, 1 South. 761, 762, 763, 60 Am. Rep. 68; Rittler v. Smith (Md.) 16 Atl. 890, 892, 893; Souder v. Society (Md.) 20 Atl. 137, 138. The provision of the bankruptcy law of 1898 that an insurance policy held by a bankrupt shall pass to his trustee as assets

Digitized by Google

of his estate unless he pays to the trustee the surrender value of the policy demonstrates the fact that the national Congress deemed the rule adopted by the Supreme Court and by the courts of these states the established law of the nation. Act July 1, 1898, c. 541, § 70, 30 Stat. 565 [U. S. Comp. St. 1901, p. 3451]. The courts of Indiana themselves, the courts in which the opposite rule seems to have taken its rise, have lately repudiated it, have followed the trend of the more modern decisions, have adopted the more liberal rule, and have declared that: "When the person himself in good faith makes the contract, procures the insurance on his own life, and pays the premiums, it is immaterial whether the beneficiary designated by him, or the assignee of the policy, has any insurable interest in the life of the insured or not. This doctrine is settled by this court, and is in accordance with the decided weight of authority." Milner v. Bowman, 119 Ind. 448, 454, 21 N. E. 1094, 5 L. R. A. 95. This is a great commercial nation. The policy of the nation, the business habits and acts of its citizens and the tendency of the decisions of its courts are to depart more and more from the old rule that choses in action are not assignable, to make them more and more the subjects of traffic and of commerce, and to sustain their transfers in the ordinary course of business. The stronger reasons, the decided trend of the decisions of the courts and the great weight of authority, concur to establish the rule that an insurable interest in the assignee of a policy of life insurance is not essential to the validity of the assignment if the party to whom it was originally issued had such an interest, and the assignment is not made as a cover for the issue of a wager policy.

In the case at bar, however, there are still other reasons why the plaintiff in this action cannot recover the proceeds of the policy which lies at the basis of this controversy against the title of the Ware National Bank or of any of the immediate or remote assignees of the German Bank upon the ground that these assignees had no insurable interest in the life of Gordon. In the first place, the administrator of the estate of Melissa Gordon is conclusively estopped from enforcing any such claim by the judgment of foreclosure and sale of the pledge in the action of the German Bank against Melissa A. Gordon and William Gordon. After all the premiums upon this policy had been paid, the Gordons pledged it to the German Bank to secure the payment of the indebtedness of William Gordon to that bank. That indebtedness has never been paid. The German Bank brought an action against Melissa A. Gordon and her husband in a court of general jurisdiction to foreclose the pledge, sell the policy, and apply the proceeds of the sale to the payment of the debt. Melissa A. Gordon and her husband appeared in that action, admitted the indebtedness and the pledge, and consented to the trial of the case. The court adjudged the amount due upon the debt, that the policy should be advertised and sold, that the proceeds of the sale should be applied to the payment of the indebtedness, and that "said defendants and each of them be and they are forever barred of and from having or claiming any lien upon or interest in or to said policies of insurance from and after such sale." On May 29, 1882, the sheriff of the county sold this policy at public vendue under an execution issued upon this judgment, pursuant to an advertisement

Digitized by Google

which he had published, to the highest bidder at the sale, the German Bank; and that judgment and the sale under it stand unassailed and without modification to the present day. Now, the claim of the plaintiff is not that the sale and the assignment to the German Bank were not valid and lawful, but that the subsequent assignments were void because the immediate and remote assignees of the bank had no insurable interest in the life secured by the policy. The answer is that Melissa A. Gordon was conclusively estopped by the judgment from claiming any interest in the policy or in its proceeds, and the plaintiff, the administrator of her estate, stands in her shoes. He is estopped from presenting or litigating this question.

It is not material to this estoppel that the judgment which works it may have been erroneous; that the court may have been mistaken in the facts, may have misconceived the law, or may have disregarded the public policy of the nation when it rendered it. It is sufficient that it had jurisdiction of the subject-matter of the action and of the parties to it, and in this state of the case the established rule of law is that its judgment upon the merits in an action between the same parties, or between those in privity with them, upon the same claim or demand, is conclusive, whether right or wrong, not only as to every matter offered, but as to every admissible matter which might have been offered, to sustain or defeat the claim presented. Cromwell v. County of Sac, 94 U. S. 351, 352, 24 L. Ed. 195; Board of Commissioners v. Platt, 79 Fed. 567, 571, 25 C. C. A. 87, 91. The plaintiff stands in privity with Melissa A. Gordon. He is the administrator of her estate, and has no rights which she did not possess at her death. The Ware National Bank is in privity with the German Bank, and the judgment in the case of the German Bank against Melissa A. Gordon and her husband conclusively estops the administrator of her estate from claiming any interest in or lien upon the policy, or the proceeds of the policy, which was the subject of that litigation.

In the second place, the German Bank was a creditor of Gordon, and therefore had an insurable interest in his life. The assignment by Gordon and his wife of the policy on his life to the bank as collateral security for the payment of his debt to it was a lawful pledge of the policy. One of the inherent and indispensable elements of a pledge is the right and the power to sell the subject of it to the highest bidder for cash, in order to realize the moneys to pay the debt. The restriction of this power to sell policies of life insurance to those purchasers who may have insurable interests in the lives insured thereby would greatly diminish, if it would not practically destroy, the value of such policies as security for loans or debts. They are now articles of commerce, the frequent subjects of purchase and of sale, and ready and valuable means of obtaining loans and securing obligations. The policy of the nation is to enlarge, not to restrict, commerce in choses in action. The conceded proposition that a pledge of a policy of life insurance to a creditor as security for a debt is lawful and valid carries with it the inevitable corrollary that such a pledge vests in the pledgee the right and the power to sell and to assign the policy to the highest bidder to obtain money to satisfy the debt, whether

Digitized by Google

that bidder has an insurable interest in the life secured by the policy or not. Our conclusion is that the lawful pledgee of a policy of life insurance has the right and the power to sell the policy to the highest bidder for the purpose of realizing money to satisfy the debt, and that the immediate and remote assignees under such a sale take good title to the policy and to its proceeds, although they may have no insurable interest in the life protected by the policy.

Because the assignments in this case were not made as covers for wager policies, but in good faith in the ordinary course of business, and no insurable interest in the assignees was essential to their validity; because the administrator of the estate of Melissa A. Gordon was conclusively estopped by the judgment in the case of the German Bank against her from claiming any interest in or lien upon the policy or its proceeds; and because the lawful pledgee of the policy had the right and the power to sell and to assign it to one who had no insurable interest in the life protected by it for the purpose of raising money to satisfy the debt it secured—the Ware National Bank was entitled to the proceeds of the policy in controversy, and the judgment below is affirmed.

(131 Fed. 728.)

JAMESON v. LEWIS.

(Circuit Court of Appeals, Fourth Circuit. July 12, 1904.)

No. 524.

1. COLLISION—APPEAL—DECISION—REVIEW.

Where, in an action for damages for collision at sea, the trial judge had the opportunity of seeing the witnesses and determining their credibility from their manner and appearance, his decision will not be reversed on appeal unless it clearly appears to be contrary to the evidence.

Appeal from the District Court of the United States for the Eastern District of Maryland.

La Roy S. Gove (James J. Macklin, on the brief), for appellant.

Robert H. Smith, for appellee.

Before GOFF, Circuit Judge, and BRAWLEY and PURNELL, District Judges.

BRAWLEY, District Judge. The libel is to recover damages for injuries received by two barges through collision with a pier while in tow of steam tug Irene, about midnight of July 30, 1902, at the entrance of the harbor of Baltimore. The learned judge below, who heard all of the testimony except that of one witness, found that the disaster occurred from the steering of the barges, the men on board of them not being capable, and not steering them properly. He found further that the entrance to the harbor was narrow, and crowded with small vessels, and that the tug took her usual course, and did all that could reasonably be expected in the circumstances, and was without fault.

¶ 1. See Admiralty, vol. 1, Cent. Dig. § 770.

Digitized by Google

There is no dispute between the contending parties as to the legal principles which govern the case, and the rule being well settled that this court will not reverse the decision of a district judge who has had the opportunity of seeing the witnesses and determining their credibility from their manner and appearance, unless it clearly appears that the decision is against the evidence, and as the examination of the testimony leads us to concur in his view of it, the decree of the court below is affirmed.

Affirmed.

(131 Fed. 240.)

ENTERPRISE MFG. CO. v. LANDERS, FRARY & CLARK.

(Circuit Court of Appeals, Second Circuit. June 2, 1904.)

No. 168.

1. UNLAWFUL COMPETITION—INJUNCTION.

Where defendants admitted that they were manufacturing and selling mills in competition with complainant's mills, and had used parts of complainant's mills as patterns wherever it was convenient or profitable to do so, and that they were now making and selling mills which in effectiveness and attractiveness were the same goods as those sold by complainant, such competition was unlawful, entitling complainant to an injunction.

2. SAME—DECREE.

Where in a suit to restrain defendants from selling certain grinding mills, on the ground of unlawful competition, the answer averred that, in addition to the manufacture and sale of similar mills by defendants, defendants also intended to make other mills which will be substantially the same goods as other classes of mills made and sold by complainant, a decree enjoining defendants from selling "any grinding mills having the characteristic shape, design, color, and ornamentation of the grinding mills sold by complainant, and referred to by the numbers 0, 1, 2," etc. (giving 15 numbers), was justified, though there was no proof of any sale of mills corresponding in size to such numbers.

Appeal from the Circuit Court of the United States for the District of Connecticut.

For opinion below, see 124 Fed. 923.

This cause comes here upon appeal from a decree of the Circuit Court, District of Connecticut, restraining defendants from unfair competition in trade, and for an accounting. Complainant and its predecessors have for 30 years been engaged in the manufacture and sale of a line of mills for grinding coffee, drugs, etc., of varying sizes; adopting therefor a certain characteristic shape, design, color, and ornamentation, which have become well known to purchasers, and associated in their minds with the goods of complainant. In 1898, or thereabouts, the defendants began to make and offer for sale similar mills, and, upon discovery thereof, this suit was brought.

E. D. Robbins, for appellants.

Charles Howson, for appellee.

Before WALLACE, LACOMBE, and TOWNSEND, Circuit Judges.

¶ 1. Unfair competition, see notes to Scheuer v. Muller, 20 C. C. A. 165; Lare v. Harper & Bros., 30 C. C. A. 376.

See Trade-Marks and Trade-Names, vol. 46, Cent. Dig. § 79.

Digitized by Google

LACOMBE, Circuit Judge. This is a most aggravated case of unfair trading. Usually in these cases the defendants so dress their goods as to present a number of points of difference, on which they rely when charged with intent to deceive; insisting that, although there may be resemblances, the differences are so great as to preclude any idea that they had sought to produce confusion. Here, on the contrary, they have not only conformed their goods to complainant's in size and general shape, which was to be expected, but also in all minor details of structure—every line and curve being reproduced, and superfluous metal put into the driving wheels to produce a strikingly characteristic effect—while the goods are so dressed with combinations of color, with decorations reproduced or closely simulated, with style of lettering and details of ornamentation, that, except for the fact that on the one mill is found the complainant's name, and on the other the defendants', it would be very difficult to tell them apart. It is elementary law that, when the simulation of well-known and distinctive features is so close, the court will assume that defendants intended the result they have accomplished, and will find an intent to appropriate the trade of their competitor, even though in their instructions to their own selling agents they may caution against oral misrepresentations as to the manufacture of the goods. There is evidence to show that purchasers have been deceived as to the identity of these mills, but, in the case of a Chinese copy, such as defendants offer to the public, such proof is hardly needed.

It is to defendants' credit that, when confronted with the charge of copying, they have not denied it, nor asserted that they were trying to differentiate their own products. On the contrary, they admit that they "concluded they could profitably manufacture this same line of hardware and sell it in competition with the Enterprise Company," and accordingly commenced the manufacture thereof, "using parts of mills sold by the Enterprise Company as patterns wherever it was convenient or profitable to do so," with the result that they are "now making and selling coffee mills which in all substantial respects, and especially in their effectiveness in use and attractiveness, are the same goods as those made and sold by the Enterprise Company."

No doubt, with such identity in attractiveness, competition with complainant's mills would be much more effective; but defendants overlooked the fact that a court of equity will not allow a man to palm off his goods as those of another, whether his misrepresentations are made by word of mouth, or, more subtly, by simulating the collocation of details of appearance by which the consuming public has come to recognize the product of his competitor.

The decree enjoined the sale of mills of seven sizes which had been already offered for sale, and further enjoined the sale of "any grinding mills having the characteristic shape, design, color, and ornamentation of the grinding mills sold by complainant, and referred to by the numbers 0, 1, 2," etc. (giving 15 numbers). Although there was no proof of any sale of mills corresponding in size to these numbers, the decree as to them was warranted by the answer, which avers that "defendant also intends to make other mills which will be sub-

Digitized by Google

stantially the same goods as other classes of mills made and sold by the Enterprise Company."

The decree of the Circuit Court is affirmed, with costs.

(131 Fed. 729.)

ROBERTS v. SHELBY STEEL TUBE CO. et al.

(Circuit Court of Appeals, Sixth Circuit. July 9, 1904.)

No. 1,298.

1. MASTER AND SERVANT—INJURIES TO SERVANT—FEDERAL COURTS—JURISDICTION—CITIZENSHIP—SEPARABLE CONTROVERSY.

Where a petition in a state court in an action for injuries to a servant against the master and a servant alleged concurring acts of negligence of the master and the servant, and the servant was of the same citizenship as plaintiff, the case did not present a separable controversy between plaintiff and the master, and was not, therefore, removable to the federal court.

In Error to the Circuit Court of the United States for the Southern District of Ohio.

Charles A. Thatcher, for plaintiff in error.

Doyle & Lewis and J. W. Schaufelberger, for defendant in error.

Before LURTON, SEVERENS, and RICHARDS, Circuit Judges.

PER CURIAM. Reversed and remanded, with directions to remand to the state court. Petition charged concurring acts of negligence of master and servant, and was therefore not a removable case, as presenting a separable controversy between plaintiff and the corporation, and is therefore governed by Chesapeake & Ohio Ry. Co. v. Dixon, 179 U. S. 131, 21 Sup. Ct. 67, 45 L. Ed. 121, and Hunt v. American Bridge Co. (decided by this court at the May session) 130 Fed. 302, 64 C. C. A. 548.

¶ 1. Separable controversy as ground for removal of suit to federal court, see notes to Robbins v. Ellenbogen, 18 C. C. A. 86; Mecke v. Valleytown Mineral Co., 35 C. C. A. 155.

Digitized by Google

(132 Fed. 752.)

MAYOR, ETC., OF CITY OF NEW YORK AND CITY OF BROOKLYN v. DUBOIS.

(Circuit Court of Appeals, Third Circuit. March 7, 1899.)

1. PRINCIPAL AND AGENT—POWER OF ATTORNEY TO CONDUCT OR COMPROMISE SUIT—ACTS BINDING ON PRINCIPAL.

A written power of attorney, by which defendant appointed another his attorney in fact to conduct "to final consummation" a pending suit in which defendant was complainant, or to compromise the same, as to him should seem expedient, did not confer authority upon the attorney in fact to stipulate through counsel employed by him, and without defendant's knowledge or consent, for the submission of the matter in controversy to a special tribunal consisting of referees selected by him and the adverse parties, and defendant was not bound by such a stipulation, nor liable for the expense of the hearing thereunder.

In Error to the Circuit Court of the United States for the Western District of Pennsylvania.

John McCleave, for plaintiffs in error.
Geo. A. Jenks, for defendant in error.

Before DALLAS, Circuit Judge, and BUTLER and BRADFORD, District Judges.

BRADFORD, District Judge. This action was brought to recover $9,000 paid by the plaintiffs in error to certain persons as compensation for alleged services as referees, together with interest thereon from March 24, 1893. The case was tried without a jury, and the facts were specially found by the court below. The record filed in this court does not set forth the evidence, nor does it disclose the same except in so far as it appears from the findings of facts, the defendant's points affirmed by the learned judge below and the opinion. Prior to June 24, 1885, John DuBois, father of the defendant, brought suit in the circuit court of the United States for the southern district of New York against the plaintiffs in error and the Trustees of the New York and Brooklyn Bridge for alleged infringement of letters patent held and owned by him. 128 Fed. 418. The complainant in that suit on the last named day executed and delivered to Thomas B. Farrington a power of attorney, setting forth the title of the case, and constituting Farrington

"My true and lawful attorney for me and in my name and stead to carry on and conduct to final consummation, or to compromise the above stated case, and all claim, demand or damages therein claimed or mentioned, in such manner or on such terms as to my said attorney may seem expedient, with the same power, force and effect as I could do if personally present. Also to receive, and receipt for all money in any manner accruing from or out of the same and full release, receipt and discharge to execute and deliver for the same."

At the time of the delivery of the above power of attorney and as part of the transaction Farrington executed and delivered to John DuBois an instrument, as follows:

"Whereas, John DuBois has delivered to me a power of attorney, this day to settle and compromise a certain case in the Circuit Court of the United

Digitized by Google

States in the Southern District of New York, wherein he is plaintiff, and the Trustees of the New York and Brooklyn Bridge, impleaded with the Commonalty, the Mayor and Aldermen of the cities of New York and Brooklyn, the defendants. Now, in case I shall settle and compromise said claim, I agree that immediately after the receipt of the money, or so much thereof accruing from settlement, to pay over and deliver to my said principal, John DuBois, the sum of twenty-five thousand dollars, and in no event to settle said case by compromise in such a manner that he shall not receive and realize said sum, out of said compromise. As witness my hand and seal this 24th day of July, A. D. 1885. Thos. B. Farrington.

Attest:

Geo. R. Vosburg."

John DuBois died May 5, 1886, having devised and bequeathed all his estate to the defendant in this cause, whom he appointed executor and to whom letters testamentary were duly issued May 17, 1886, in Clearfield County, Pennsylvania. The defendant executed and delivered to Farrington on June 10, 1886, an instrument extending the power of attorney given by his father, as follows:

"I, John E. DuBois, in my own right and as executor of John DuBois, deceased, do hereby make, renew and extend the within power of attorney according to its terms, and with all the powers therein set forth, and make the same irrevocable for one year from this date. As witness my hand and seal this 10th day of June, A. D. 1886. John E. DuBois. (Seal)"

Farrington, at the same time and as part of the transaction, executed and delivered to the defendant an instrument, as follows:

"Whereas, John E. DuBois has delivered to me a renewal and extension of a power of attorney this day, to settle and compromise a certain case in the Circuit Court of the United States in the Southern District of New York, wherein he is plaintiff and the Trustees of the New York and Brooklyn Bridge impleaded with the commonalty the mayor and alderman of the cities of New York and Brooklyn, the defendants. Now in case I shall settle and compromise said claim I agree that immediately after the receipt of the money, or so much thereof accruing from settlement, to pay over and deliver to my said principal John E. DuBois the sum of twenty-five thousand dollars, and in no event claim or charge him for my services therein nor for fees, charges or costs thereof nor to settle said case by compromise in such a manner that John E. DuBois shall not receive and realize said sum out of said compromise and I agree to indemnify him against all fees, costs and charges on account of said case. As witness my hand and seal this tenth day of June, A. D. 1886. Thomas B. Farrington. (Seal)"

Between June 10, 1886, and September 10, 1892, the defendant executed and delivered to Farrington instruments under seal continuing his authority as attorney in fact, the last of such instruments being in substance similar to the others and as follows:

"I hereby extend the above power of attorney upon the same terms and subject to the same conditions and stipulations under which it has heretofore been held, for the term of one year from the 10th day of June, 1892. As witness my hand and seal this 10th day of September, 1892.

John E. DuBois. (Seal)"

It does not appear that at any tme after June 10, 1886, the scope of Farrington's authority was enlarged. The legislature of the State of New York passed an act June 9, 1888 (Laws 1888, p. 923, c. 564), entitled "An act to authorize the adjustment of a claim by John E. DuBois, as executor of the last will and testament of John

Digitized by Google

DuBois, deceased, and, in his own right against the cities of New York and Brooklyn, in relation to the construction of the bridge between those cities." Section 1 of the act provided as follows:

"Section 1. The mayors of the cities of New York and Brooklyn, are each authorized to appoint one person, and John E. DuBois may appoint a third person, and the three persons so appointed shall examine and report whether or not the said John E. DuBois, as executor of the last will and testament of John DuBois, deceased, or in his own right, has a just and valid claim against the said cities, for the use in the construction of the bridge between said cities of improvements in the mode of building piers for bridges and other structures, for which it is claimed that letters patent were granted to the said John DuBois, now deceased, by the United States, dated the twenty-third day of September, eighteen hundred and sixty-two, which have been sustained by a decision of the Supreme Court of the United States, and if they find that he has such a claim, what would be a fair and reasonable compensation for the use of such improvements, and upon a report by the three persons so appointed, or a majority of them, that such a claim is just and valid, if the report shall be approved in writing by the Mayors of both of the said cities, the comptroller of each city shall pay to the said John E. DuBois, as executor as aforesaid and in his own right, or his legal representative, out of any of the revenues of the city the amount reported by the three persons so appointed to be a fair and reasonable compensation for such use, or such part thereof, as shall be authorized and directed in writing by the Mayors of both of the said cities in the proportion in which payments by the said cities, on account of the said bridge, are required to be made by law, upon the execution and delivery by the said John E. DuBois, as executor, as aforesaid, and in his own right or his legal representatives, to each of the said comptrollers, of a release of any and all claims against the said cities for the use of said improvement."

Section 2 provided that—

"the persons so appointed shall have power in the performance of the duty aforesaid to take testimony under oath, which any of them may administer, and to procure proper evidence by experts;"

and section 3 provided that the act should take effect immediately. Afterwards, but on what day does not appear, although it was not later than June 3, 1891, a written agreement was executed by the counsel for the cities of New York and Brooklyn respectively, and by certain attorneys assuming to represent John E. DuBois, as follows:

"In the matter of the claim of John E. DuBois as executor of the last will and testament of John DuBois, deceased, and in his own right against the cities of New York and Brooklyn, in relation to the construction of the bridge between those cities. Before:

Stephen V. White, Jasper W. Gilbert, Charles M. Clancy. Referees appointed pursuant to chapter 564 of the laws of 1888.

It is stipulated as follows: The fees of the referees shall be to each the sum of $25 per session of from 12 to 4 o'clock, these fees to be paid at the close of the reference and the rendition of the report of the referees, and to be advanced by the successful and taxed against and paid by the defeated party.

John E. DuBois, individually and as executor, and the Mayor, Alderman and Commonalty of the City of New York and the City of Brooklyn, and the Trustees of the New York and Brooklyn Bridge, agree that the action pending between them in the United States Circuit Court for the infringement of patents relating to the placing of piers in deep water shall be discontinued immediately upon the report of the referees appointed under chapter 564 of the Laws of 1888, being made, providing the same shall be adverse to the

Digitized by Google

claimant, or in case the said report be favorable to the said claimant and the report be approved in writing by the Mayors of both the said cities and the amount awarded by the report so approved be paid; but it is expressly understood and agreed that nothing contained in this minute shall be construed as a stipulation or agreement on the part of the said Mayors, or either of them, that the said report when made shall be approved by them, or either of them. Such discontinuance shall not be made provided the said act shall be repealed before the payment of the award. Written pleadings shall be prepared by the parties, the claimant to submit his pleadings within seven days, and the cities of New York and Brooklyn to have thirteen days thereafter, in which to answer; and if no further pleadings are submitted, the issues arising to be tried according to law, and that the rules of law governing the admissibility of testimony in cases in the courts of law shall be adhered to. Either party may read the testimony of the witnesses in case of John DuBois against the Mayor, Alderman and Commonalty of the City of New York, the City of Brooklyn and the Trustees of the New York and Brooklyn Bridge in said United States Circuit Court, with the same force and effect and subject to the same objections as though the same were taken herein, the parties so reading to produce, upon reasonable notice for cross-examination, the witnesses whose testimony he reads. It is also stipulated that two referees may hold meetings and take testimony in the absence of the third referee. It is further agreed that nothing contained in the act of the Legislature under which the referees are appointed, shall be construed to affect in any way any defense before the referees which the two cities or the Trustees or either of them might urge in the courts of the United States to answer to a suit upon the patent in question, and every such defense shall be available to the two cities and the Trustees.

Almet F. Jenks,
Corporation Counsel of Brooklyn.
Wm. N. Clark,
Corporation Counsel of New York.
Knevals & Perry, and N. J. & N. J.
Waterbury, Jr.,
Attorneys for John E. DuBois."

Some of the further findings of fact are as follows:

"9. The said Thomas B. Farrington—assuming to act for the defendant John E. DuBois but without any authority to do so other than that conferred by the above recited power of attorney and renewals thereof—of his own motion joined in the aforesaid reference under the said act of the legislature of New York and employed therein counsel and attorneys at law, namely, Knevals & Perry and N. J. and N. J. Waterbury, Jr., and by his (Farrington's) authority and not otherwise they signed the above recited stipulation. The defendant personally did not take any part in entering into said reference or in making said stipulation or in the proceedings thereunder. The defendant did not attend any of the meetings of the referees, and it does not appear that he had any knowledge of any of these matters until after the proceedings under the reference had fully terminated.

10. On the fifteenth day of February, 1893, the above named referees made a report in writing against the aforesaid claim of the defendant and favorable to the plaintiffs herein and delivered a copy of their report to each of the plaintiffs but none to the defendant.

11. On or about the twenty fourth day of March, 1893, the referees rendered to the plaintiffs herein a bill for their services, namely, $3,000 for each referee, making a total of $9,000 and this sum was paid to the referees by the plaintiffs. For the reimbursement of the plaintiffs this suit was brought upon the above recited stipulation.

12. There never was any taxation of the fees of the referees. In making out their bill the referees paid no regard to the terms of the above stipulation, but charged what they considered was a fair compensation for their services without taking into account the number of days they held sessions.

13. It is difficult to determine with precision from the evidence the number

Digitized by Google

of days upon which sessions were held by the referees. It would seem that they did not exceed eighteen. On several of these days only one referee attended, and only about six days were the three referees present.

14. The sessions of the referees were conducted without any regard to the provision in the stipulation—'The fees of the referees shall be to, each the sum of $25 per session of from 12 to 4 o'clock.' It does not appear that a single one of the sessions held by the referees lasted four hours or that they sat that long on any day.

15. One of the referees, Jasper W. Gilbert, not regarding the reference 'as a trial in court,' privately consulted Mr. Van Buren, the engineer of the New York City Water works in respect to mechanical and engineering subjects connected with the subject-matter of the controversy, and these private consultations with Mr. Van Buren were for the purpose of 'posting' said referee or giving him information upon which to act, and they took place while the case was under consideration by the referees, and before report made."

The court below further found that "there is no evidence sufficient to prove that Knevals & Perry and N. J. & N. J. Waterbury, Jr. were agents or attorneys of John E. DuBois."

On the foregoing facts we are clearly of opinion that in no aspect of this case are the plaintiffs entitled to recover. The extent of the authority conferred by the defendant on Farrington was to prosecute the former case "to final consummation" or to compromise it on such terms as to Farrington should "seem expedient"; the latter agreeing that no compromise should be effected in such manner as not to yield $25,000 to his principal. It may, without deciding the point, be assumed for the purposes of this case, that Farrington's undertaking not to compromise for less than $25,000 could not bind or affect third persons with whom he dealt as attorney in fact. His agency, however, so far as it related to a compromise, was a personal trust and confidence reposed in him, involving the exercise of his own judgment as to terms of settlement and incapable of delegation to referees or other persons. No compromise within the terms or scope of his authority was effected by Farrington, nor did he prosecute the case "to final consummation" pursuant to that authority. On the contrary, without the consent or knowledge of the defendant in error, and in clear violation of the trust he had assumed, he either personally or through attorneys employed by him co-operated with the representatives of the cities of New York and Brooklyn in securing the creation of a special tribunal to dispose of the case, consisting of three referees, two of whom were chosen by those cities respectively and were empowered, according to the provisions of the New York act of assembly, to make an award, which, if against the defendants, should not be operative until approved by the Mayors of both cities, and in case of such approval should be operative and final only to the extent to which it had been so approved. By the terms of the submission it was "expressly understood and agreed that nothing contained in this minute shall be construed as a stipulation or agreement on the part of the said Mayors, or either of them, that the said report when made shall be approved by them or either of them." The result of the reference, as has appeared, was an award in favor of the cities. The course pursued by Farrington was not a proper, usual or reasonable procedure either for conducting the suit to its termination or for effecting a com-

Digitized by Google

promise of it. It was a wanton or reckless sacrifice by him of the substantial right of the defendant in error to have his claim decided by an impartial tribunal fairly constituted and without conditions calculated to defeat a recovery of a just claim. The method adopted for the disposition of the case was so unusual, unfair and remarkable as to impose upon the referees and the counsel for the cities the necessity of inquiring into the authority of Farrington or of the attorneys employed by him, but apparently representing the defendant in error, to procure or take part in the reference. To indulge in a mere assumption that the defendant in error had conferred power of such extraordinary character upon an attorney at law or an attorney in fact, could afford no justification for relying upon its existence. It does not appear that any such inquiry was made or that either Farrington or the attorneys employed by him stated to the counsel for the cities or to the referees at any time that the defendant in error had in fact conferred upon him or them such authority. The defendant in error was not aware of the reference or of the proceedings under it, and it does not appear that he has in any manner ratified them. Under these circumstances, so far as the defendant in error was concerned, the referees acted under the submission at their own peril and the cities equally acted at their own peril in advancing to them $9,000 as compensation. The money so paid to the referees furnished no basis for any claim against the defendant in this suit. It is unnecessary to allude to other matters of defense.

The judgment below is affirmed.

NOTE BY THE COURT. The conclusion reached in the foregoing opinion had been concurred in by all the judges who sat in the case, prior to the resignation of Judge Butler. The judgment is therefore the unanimous judgment of the court as it was constituted upon the hearing.

(131 Fed. 841.)

MAXFIELD v. GRAVESON.

(Circuit Court of Appeals, Sixth Circuit. June 8, 1904.)

No. 1,282.

1. MASTER AND SERVANT—INJURY OF SERVANT—ACTS OF FELLOW SERVANTS.

A master who furnished a stiff-leg derrick requiring no guy rope for use by his employés in unloading stone from cars, which was complete and in good repair, and suitable for the work, is not liable for the injury of an employé by the falling of a block forming part of a guy line which had been rigged by fellow servants of such employé for their own convenience to enable the derrick to be given a longer reach than it was intended to have, so that a car might be unloaded without being moved, such line having been put on in the absence of the master, and without his knowledge.

2. SAME.

The fact that an employé was not present at the time a change was made in an appliance by his fellow servants, without the master's knowledge, by reason of which he was subsequently injured, does not render the master liable for the injury.

¶ 2. See Master and Servant, vol. 34, Cent. Dig. §§ 388, 397, 567.

Digitized by Google

In Error to the Circuit Court of the United States for the Western Division of the Southern District of Ohio.

Brent Spence and Michie & Green, for plaintiff in error.
Stephens, Lincoln, & Stephens, for defendant in error.

Before LURTON, SEVERENS, and RICHARDS, Circuit Judges.

RICHARDS, Circuit Judge. This was an action for personal injuries. In November, 1902, the defendant, as contractor, was engaged in building the stonework of the new intake pier of the Cincinnati Waterworks. A small number of men were engaged upon the job, and among others the plaintiff, who was employed as a day laborer. On November 7, 1902, the plaintiff was at work turning the crank or crab of a small derrick used to lift blocks of stone from a railroad car to a truck on which they were run out to the pier. While so engaged, a block, a part of a guy line fastened to the top of the derrick, fell, and struck the plaintiff on the head, injuring him. For this he brought suit, alleging the defendant was negligent in fastening the block at the top of the derrick with a defective and worn-out rope, and in not fastening it there with an iron chain or band. At the conclusion of the testimony the court below directed a verdict for the defendant on the ground that the guy line, of which the block was a part, did not belong to the derrick, which was complete in itself, but was attached by the men employed on the job for their own convenience, to enable them to secure a wider reach in handling the stone, so that the negligence which caused the injuries of the plaintiff was that of his fellow servants. For this error is assigned.

There was no conflict in the testimony. The derrick was a small, stiff-leg derrick, in which the mast is held upright by two timbers or stiff legs, the upper ends of which fit over an iron pin in the top of the mast, and are there fastened or held down by a piece of iron which runs through the eye of the pin. The mast and stiff legs stand on heavy timbers, which meet at right angles at the foot of the mast, and are weighted or fastened to the ground. The mast turns with the boom, which is attached to it. A stiff-leg derrick is a hoisting machine complete in itself. No guy line is ordinarily needed or used. When the derrick was first rigged, no guy line was attached, and, there being no iron pin at hand, a wooden pin was used to hold down the stiff legs. In the use of the derrick, in reaching sidewise for the stone, an unusual strain was put upon one of the stiff legs. This strain broke the wooden pin, and the derrick fell down. When it was rigged again, an iron pin was used to hold the stiff legs down, and a guy line was run from the top of the mast to the ironwork of a bridge near by. This guy line was composed of a pair of blocks and tackle fastened to the top of the mast by a rope strap composed of three double strands. This strap or loop was placed around the pin in the top of the mast, and the block hooked into it. The rope used to make the strap was as good as new, but by the turning of the mast gradually chafed through and broke, letting the block and tackle fall. The guy line was attached to permit the handling of stone beyond the normal reach of the derrick. By thus using this stiff-leg derrick in a manner for which it was not de-

Digitized by Google

signed, a car could be unloaded without being moved. The device was not necessary, for the car could have been moved, but it was convenient, because it saved the workmen the trouble of moving it. Plaintiff was in the employ of the defendant before the derrick was rigged with the guy line, but on another part of the job.

The record shows the defendant was at the derrick several times during the month the guy line was in use, but it does not show that he directed or suggested its use. Indeed, the court below, in directing a verdict for the defendant, offered to consider, on the motion for a new trial, "any evidence to show that the attachment of the guy rope to the derrick was caused by the master in any way." No advantage was taken of this offer. It is undoubtedly true, as the plaintiff claims, that the master owes his servant the positive duty of providing a reasonably safe place in which to work, and reasonably safe appliances with which to work, and that this cannot be escaped by intrusting its performance to an agent or servant. Such agent or servant, although working side by side with a servant injured through his negligence, is not regarded as a fellow servant, but as a representative of the master, for whose act the master is responsible. National Steel Co. v. Lowe (C. C. A.) 127 Fed. 311, 315.[1] Under this rule it was the duty of the defendant to furnish a reasonably safe derrick for the use of the men employed on this job, not as a place, but as an appliance. Chambers v. American Tin Plate Co., 129 Fed. 561;[2] Kelly v. Jutte & Foley Co., 104 Fed. 955, 44 C. C. A. 274. The testimony shows, however, that the derrick, as a stiff-leg derrick, was a reasonably safe appliance. The accident occurred not through the breaking of the derrick, or any part of it, but of the guy line attached by the fellow servants of the plaintiff for their convenience. It is true that the parts composing this guy line—the blocks, tackle, and rope—were furnished by the defendant. But they were not furnished for this use. They were sent out at the beginning of the job, along with the derrick, because blocks, tackle, and rope were needed in the proper use of the derrick as a stiff-leg derrick. There is nothing in the record to show that the master had anything to do with the use of this material as a guy line. The record fails to show that he ever directed, suggested, or contemplated such use. All the testimony was to the effect that a guy line, such as the one that was rigged, is no part of a stiff-leg derrick.

There is authority to the effect that the master is not responsible for an accident to a servant resulting from the negligence of a fellow servant engaged in rigging a derrick or similar appliance, when such work is a part of the duty of the common employment. Peschel v. Chicago, Milwaukee & St. Paul Ry., 62 Wis. 338, 21 N. W. 269; Beesley v. Wheeler & Co., 103 Mich. 196, 61 N. W. 658, 27 L. R. A. 266; Kalleck v. Deering, 161 Mass. 469, 37 N. E. 450, 42 Am. St. Rep. 421; McGinty v. Athol Reservoir Co., 155 Mass. 183, 29 N. E. 510; Marsh v. Herman, 47 Minn. 537, 50 N. W. 611. But it is unnecessary to consider the application of this rule, for the accident did not result from the negligent rigging of the derrick as a stiff-leg derrick. As a stiff-leg derrick, aside from the guy, it stood properly rigged at the time of the accident, and it continued to stand and do its work after the accident. The injury resulted from the attachment of an extraneous thing—a

[1] 62 C. C. A. 229. [2] 64 C. C. A. 129.

Digitized by Google

guy line. This was placed there by the men for their own convenience, to permit the handling of stone a greater distance from the mast than could be done without it. The natural reach of this stiff-leg derrick would not admit of the unloading of all the stone on a car without moving the car. An attempt to handle the stone outside of a certain radius would result in a toppling of the derrick. To prevent this, the guy line was rigged. It was attached so that the derrick could be put to a use never contemplated by the master. This was an illegitimate use, and the master cannot be held liable for an injury resulting to one servant from such use of the derrick by his fellow servants. Injury from the illegitimate use of an appliance by fellow servants is one of the risks of the employment. The master is only responsible for injuries resulting from a defect of the appliance itself. Griffiths v. Gidlow, 3 Hurlstone & Norman, 648, 655; The Persian Monarch, 55 Fed. 333, 5 C. C. A. 117; Callaway v. Allen, 64 Fed. 297, 12 C. C. A. 114; Kelly v. Jutte & Foley Co., 104 Fed. 955, 44 C. C. A. 274.

The fact that the plaintiff, while employed on the job, was not working at the derrick when the guy line was attached, cannot operate to make the defendant liable. The negligence of the men was still the negligence to fellow servants, for which the master was not responsible. O'Connor v. Rich, 164 Mass. 560, 42 N. E. 111, 49 Am. St. Rep. 483; Burns v. Sennett & Miller, 99 Cal. 363, 372, 33 Pac. 916; Butler v. Townsend, 126 N. Y. 105, 112, 26 N. E. 1017.

The judgment of the lower court is affirmed.

(131 Fed. 844.)

BRITTON v. CENTRAL UNION TELEPHONE CO.

(Circuit Court of Appeals. Sixth Circuit. June 29, 1904.)

No. 1,276.

1. MASTER AND SERVANT—INJURIES TO SERVANT—TELEPHONE POLES—APPLIANCES—SAFE PLACE TO WORK.

   Where a telephone lineman was injured by the falling of a defective pole from which he was removing the wires prior to the demolition of the pole, such pole was an appliance only, and not a place to work which plaintiff's employer was required to make safe for him to work on.

2. SAME—INSPECTION.

   Where defendant telephone company had not assumed the duty of independently inspecting and testing its telephone poles before they were climbed by linemen, and the only inspection required was such as an ordinarily skillful lineman could readily perform before undertaking to climb the pole, a lineman so employed assumed the risk incident to climbing such poles after making such examination and tests as his judgment would indicate was necessary.

3. SAME—WARNING.

   Where a telephone lineman had been previously discharged by defendant for incapacity, and thereafter, on again applying for employment, defendant was informed that he had not sufficient experience to work as a lineman, by reason of which he was employed at other work for a time, and was then directed to do a lineman's work in removing wires from certain old poles, in which work he was injured by the falling of a pole, whether defendant was negligent in permitting him to do such

Digitized by Google

work, which involved the climbing of the poles, without warning him to make an inspection thereof, and as to the manner in which such inspection should be made, was for the jury.

In Error to the Circuit Court of the United States for the Southern District of Ohio.

F. S. Monnett and Pugh & Pugh, for plaintiff in error.
L. G. Richardson and Stewart & Stewart, for defendant in error.

Before LURTON, SEVERENS, and RICHARDS, Circuit Judges.

LURTON, Circuit Judge. Plaintiff, a lineman in the service of the defendant telephone company, was injured by the breaking of a decayed telephone pole which he had climbed in the ordinary course of his duty. He brought this action to recover damages, and upon the conclusion of his evidence the court instructed the jury to return a verdict for the telephone company. This is the only error assigned.

The pole which fell was decayed below the ground, and was apparently sound above the ground. Before climbing, plaintiff tested its strength by shaking, and then climbed up some five or six feet and again shook it. No weakness being thus discovered, he climbed to the top, and while engaged in working with the wires the pole fell. The plaintiff was one of a gang of men engaged in removing or transposing the wires from an old line of poles upon one side of a country road, along which the company's telephone line extended between two Ohio towns, to a line of new poles upon the opposite side of the same road. The old line of poles was being abandoned because the poles were old and needed replacement, and plaintiff knew this, and knew that as the wires were transposed the old poles were cut down. Another gang was at the same time engaged in putting up the new poles. This gang kept somewhat in advance of the wire gang. Both gangs were under the charge of a foreman, but the foreman was not personally present when plaintiff was hurt, and gave no direction to plaintiff about climbing the pole which fell, and made no inspection of that or any of the poles to be climbed.

1. It is first insisted that the instruction to find for the defendant was erroneous, because the telephone company owed the duty of providing plaintiff with a safe place in which to do his work. The pole is a mere appliance for the support of the wires. To reach the wires, the lineman uses the pole as he might a ladder or a scaffolding. It is therefore more in the nature of an appliance than a place. In Chambers v. Am. Tin Plate Co. (decided April 5, 1904) 129 Fed. 561, 64 C. C. A. 129, we held that a scaffold was an appliance, and not a place; and in Maxfield v. Graveson (decided at this session) 131 Fed. 841, 65 C. C. A. 595, we held that a derrick was also an appliance.

2. It is next urged that, considered as an appliance or a place, the duty of the defendant was to inspect and test the poles before requiring plaintiff to climb it. But the evidence disclosed that the defendant did not assume the duty of having any independent inspection or testing of poles before they were climbed by linemen. The practice and custom under which it conducted its operations made every lineman his own inspector, and linemen were required to make such inspection and testing

Digitized by Google

of poles before going on them as they should deem essential to their own safety in doing the work they assumed to do. The case in this respect differed from Cumberland Telephone Co. v. Bills (C. C. A.) 128 Fed. 272,[1] where there was evidence tending to show that under the practice and usage of that company it was the duty of the foreman of linemen to test the safety of a pole before it was climbed by the linemen, and that the plaintiff in that case did not make such a test as he otherwise would because he relied upon the foreman doing his duty. We therefore held that, if the jury found that the Cumberland Telephone Company had assumed to make an independent inspection before requiring its linemen to climb any particular pole, that the neglect of that duty by the gang foreman, upon whom the company had imposed it, would be the neglect of the company, and not that of a fellow servant. But we see no reason why a lineman, in view of the peculiar character of his work, may not lawfully contract to do any inspecting or testing reasonably necessary to determine whether he can safely climb a particular pole for the purpose of adjusting, transposing, or placing new wires. His acceptance of service with knowledge of the way in which the company conducts this part of its business, whether that way be the safest way for him or not, would imply an assumption of the risks incident to that mode of carrying on its work. Linemen must, in the very nature of the occupation, be often required to work alone, or in association with another lineman, and it would seem quite impracticable and unreasonable to send one man as an inspector with another of equal fitness to test a pole before climbed by the latter. The case might be altogether different if skill of a kind not presumably required from a lineman in the usual course of his calling was necessary to apply the tests reasonably sufficient in such cases. The tests which the plaintiff's evidence shows to be customarily used are by shaking, by pushing against the pole by means of a long staff with a point at one end, and by throwing away the dirt next the surface at the base of the pole and examining by use of an axe or crowbar the soundness of the pole at that point. These tests are all simple, and quite within the range of the experience of a qualified lineman, as shown by the evidence in this case. The experience of any such lineman would advise him that the life of a pole varies with climate, soil, and character of the wood. The same experience would warn him of the danger of putting the strain incident to climbing and removing or adjusting wire upon a pole of uncertain age, for a pole may well stand under the support of wires extending from one pole to another which will not stand under the weight of a man with the tension of the wires removed. That he should be held to assume the risks incident to climbing after making such examination and tests as his own experience and judgment should indicate were necessary is not inconsistent with the fair implications arising from his acceptance of employment. This is the view indicated by the opinion of Judge Richards in Cumberland Tel. Co. v. Bills, cited above, and is supported by the cases cited by him of McIsaac v. Northampton Electric Co., 172 Mass. 89, 51 N. E. 524, 70 Am. St. Rep. 244, and McGorty v. The Southern New England Tel. Co., 69 Conn. 635, 38 Atl. 359, 61 Am. St. Rep. 62. To these we add Cumberland Tel. Co. v. Loomis, 87 Tenn. 504, 11 S. W. 356; Sias

[1] 62 C. C. A. 620.

Digitized by Google

v. Lighting Co. (Vt.) 50 Atl. 554. McGuire v. Bell Telephone Co., 167 N. Y. 208, 209, 212, 60 N. E. 433, 52 L. R. A. 437, is not in conflict. The evidence there showed an assumption of the duty of inspection, before climbing, by the company, and the opinion distinguishes the case from McIsaac v. Electric Co., 172 Mass. 89, 51 N. E. 524, 70 Am. St. Rep. 244, upon that very ground. This is also true of W. U. Tel. Co. v. Tracy, 114 Fed. 282, 52 C. C. A. 168. The principle applicable in such cases is that by continuing in the service with knowledge of the manner in which that business is conducted the servant agrees that the dangers obviously incident to the discharge of his duties when he is expected to determine for himself the safety of a particular pole before climbing shall constitute a term of the contract of employment. This is the doctrine of assumption of risk as many times expounded by this and other courts. Narramore v. Cleveland Ry. Co., 96 Fed. 298, 37 C. C. A. 499, 48 L. R. A. 68; Chesapeake & Ohio R. Co. v. Hennessey, 96 Fed. 713, 38 C. C. A. 307; Texas & Pacific Ry. Co. v. Archibald, 170 U. S. 665, 672, 18 Sup. Ct. 777, 42 L. Ed. 1188; Gibson v. The Erie Ry. Co., 63 N. Y. 449, 20 Am. Rep. 552; Hickey v. Taafe, 105 N. Y. 26, 12 N. E. 286; Hawk v. Penn. Ry. Co. (Pa.) 11 Atl. 459; Whelton v. Ry. Co., 172 Mass. 555, 52 N. E. 1072; Richards v. Rough, 53 Mich. 212, 18 N. W. 785; Hayden v. Smithville M. Co., 29 Conn. 548; Randall v. B. & O. R. R., 109 U. S. 478, 482, 3 Sup. Ct. 322, 27 L. Ed. 1003; Tuttle v. Milwaukee Ry., 122 U. S. 189, 7 Sup. Ct. 1166, 30 L. Ed. 1114; Kohn v. McNulta, 147 U. S. 238, 13 Sup. Ct. 298, 37 L. Ed. 150; Felton v. Girardy, 104 Fed. 127, 43 C. C. A. 439.

3. But it is urged that the plaintiff was an inexperienced lineman, and that the defendant company knew this, and did not instruct him as to the methods of inspecting or testing a pole before climbing, and did not furnish him with the tools adapted to make tests. The learned trial judge erred, as we think, in taking this question from the jury. The extent of the experience of this plaintiff in the matter of climbing poles, new or old, was, upon his testimony, quite limited. Whether it was sufficient to constitute him a competent lineman in all branches of his work was a matter left in some doubt by the testimony of certain alleged experts as to the time necessary to make a first-class lineman. The occupation of a lineman is evidently one attended with a considerable degree of risk, and these risks are accentuated if he be put to the business of dismantling an old line of telephone poles. The dangers incident are for the most part of an obvious kind, but the best way of minimizing them by determining the reasonable safety of a given pole for one whose duty it is to climb and detach the wires must be acquired by experience in and observation of such work, or by instruction. A qualified lineman may be presumed to know how to take care of himself. But the presumption does not hold true as to an inexperienced man. Was the plaintiff a man who had had the experience and observation needful to enable him to guard in the best way against the dangers of a decaying or weak pole under the strain of a man working among the wires at its top? If he applied for employment as a lineman, and was apparently mature and intelligent, the company might act safely upon the presumption that he was qualified for his work, and capable of exercising due care to guard against the dangers inci-

Digitized by Google

dent to his duties. In such case no duty to instruct would be imposed. But where facts are brought to the notice of the master showing the disqualifications of the servant to safely encounter dangers which the employer knows he will meet, and which he has reason to believe the servant, from inexperience or other cause, does not appreciate or know how to guard against, the duty of cautioning and instructing becomes a personal duty of the master. Louisville & Nashville R. Co. v. Miller, 43 C. C. A. 436, 104 Fed. 124; Felton v. Girardy, 43 C. C. A. 439, 104 Fed. 127; Burgess v. W. U. Tel. Co. (C. C.) 108 Fed. 26. But application for or representations of qualifications for the duties of a particular place will not excuse the master from cautioning and instructing a servant whom he knows, from inexperience or otherwise, to be in fact either ignorant of dangers known to the master or ignorant of the methods of guarding himself against such unknown dangers. In L. & N. R. Co. v. Miller, cited above, we said:

> "It is illogical to say that a servant impliedly assumes the hazards and risks of an occupation which are known to the master, but which the master knows are unknown to the servant, unless the dangers are so obvious that even an inexperienced person could not fail to escape them by the exercise of ordinary care."

But it was in evidence in this case that the plaintiff had been in the employment of the defendant company as a lineman for some two weeks in the spring preceding the September when he was hurt, and that he had been discharged for incompetency by the foreman under whom he was then working. He says he complained to the manager that he had not been treated right in thus discharging him, and applied for another job, and that the manager said he would inquire into the grounds of his discharge, and might return upon another day. He did return, and was told to apply for work to one Whiting. He accordingly applied to Whiting, and this is what plaintiff says occurred: "Whiting asked me if I was a lineman. I says, 'No, sir, I am not a lineman; I haven't been working at line work long enough to call myself a lineman, but I can do some work.'" Upon this he was employed as a second-class lineman. The difference between a first-class and a second-class lineman is not defined. But it appears that this first employment was as a green hand—an apprentice learning the business. When Mr. Brennan, the manager, inquired as to why plaintiff had been discharged, he was told that it was because of his inexperience; "because we were afraid he would hurt himself or some one else." It was also in evidence that Mr. Whiting, one of the defendant company's officials of whom Mr. Brennan made inquiry, recommended his employment as an "instrument man; not as a lineman." The witness Whiting says: "I told him I thought he would do well enough if he put him inside somewhere, where he did not have so much climbing to do; that he was inexperienced for to do Columbus work." The result was that he was employed and first put on some inside work, and then to hauling cross-arms and distributing them, and then to digging holes and putting in the new poles. Two weeks before he was hurt he was changed over to the wire gang, and put to the dangerous work of dismantling an old line of poles of their wires. He says he was told nothing whatever of the dangers incident, and nothing of how to test poles before

Digitized by Google

climbing. He saw other linemen shaking the poles before going up, and he "followed suit." He was not told about examining the base of the pole below the ground, or the use of the pike staff, or furnished with tools to make either test. Under these facts we think the court should have put to the jury the question as to whether the circumstances did not raise the duty of cautioning and instructing plaintiff before putting him into the work of transferring wires from this dangerous line of poles.

For this reason the judgment is reversed, and a new trial will be awarded.

(131 Fed. 849.)

DODGE v. UNITED STATES.

(Circuit Court of Appeals, Second Circuit. June 2, 1904.)

No. 181.

1. TRIAL—JUDGMENT ON THE PLEADINGS.

Under the mandate of a Circuit Court of Appeals directing a new trial the entry of judgment upon the pleadings without taking testimony may properly be directed by the trial court. If the pleadings present such a state of conceded facts as to entitle either party to a judgment, the action of the trial court in making proper disposition of the case, after hearing the argument, is itself a trial.

2. SAME—NOTICE OF MOTION—JUDGMENT ON THE PLEADINGS.

In moving for a judgment on the pleadings in a cause on trial in a federal court it is not required by section 537, Code Civ. Proc. N. Y., that a notice of motion should be given. When the cause is regularly reached for trial, the parties are sufficiently advised that the pleadings and the proofs are before the court for consideration. The notice contemplated in said section is required only when some special application is to be made for judgment on the pleadings in advance of the trial.

3. CUSTOMS DUTIES—PASSENGERS' BAGGAGE—EXEMPTED ARTICLES—DUTY OF MAKING ENTRY—FORFEITURE.

In construing the provision in paragraph 697, Tariff Act July 24, 1897, c. 11, § 2, Free List, 30 Stat. 202 [U. S. Comp. St. 1901, p. 1689], that $100 in value of articles purchased abroad by returning residents of the United States may be admitted free of duty, *held* that it is the passengers' duty to enter and declare the value of such articles, whether they cost more than $100 or not, and that when not so declared they are subject to forfeiture under section 2802, Rev. St. U. S. [U. S. Comp. St. 1901, p. 1873].

4. SAME—FORFEITURE—FRAUDULENT INTENT—SMUGGLING.

In construing section 2802, Rev. St. U. S. [U. S. Comp. St. 1901, p. 1873], providing for the forfeiture of "any article subject to duty * * * found in the baggage of persons arriving in the United States, which was not at the time of making the entry for such baggage mentioned to the collector before whom the entry was made," *held*, that fraudulent intent is not an ingredient of the cause of forfeiture; also, that dutiable articles found in the handbag of a passenger after said passenger had entered other dutiable articles were subject to the enforcement of the penalties prescribed by said section.

In Error to the District Court of the United States for the Southern District of New York.

Note U. S. v. Harts (D. C.) 131 Fed. 886, herewith.

This cause comes here upon a writ of error to review a judgment of the District Court, Southern District of New York, condemning one pearl necklace, with charm studded with one ruby and diamonds, one pearl and diamond band

Digitized by Google

necklace, and other articles of jewelry, the property of the claimant, a resident of the United States returning from abroad, which had been purchased abroad. The two pearl necklaces were presents, which had been given to her during a visit in Paris shortly before she left to return home. The facts sufficiently appear in the opinion.

W. Wickham Smith, for plaintiff in error.
Ernest E. Baldwin, for the United States.

Before LACOMBE, TOWNSEND, and COXE, Circuit Judges.

LACOMBE, Circuit Judge. This case has once before been considered by this court (111 Fed. 164, 49 C. C. A. 287, 56 L. R. A. 130), and to the opinion then rendered but little need be added. The information set forth three causes of action, of which the first was abandoned at the first trial; the second and third were based, respectively, on sections 3082 and 2802, Rev. St. U. S. [U. S. Comp. St. 1901, pp. 2014, 1873]. Upon the first trial the case was submitted to the jury under instructions which were, in substance, that if the jewelry was brought in by the claimant without any purpose of escaping the payment of duties, and not as merchandise in the guise of baggage, she was entitled to a verdict. We held that such instruction was erroneous, and that, "if the claimant omitted to mention the jewelry to the customs officer who received her entry made before the examination of her baggage, the articles became liable to forfeiture if they were in fact dutiable." This conclusion was based upon the language of section 2802, which reads:

"Sec. 2802. Whenever any article subject to duty is found in the baggage of any person arriving within the United States, which was not, at the time of making entry for such baggage, mentioned to the collector before whom such entry was made by the person making entry, such article shall be forfeited, and the person in whose baggage it is found shall be liable to a penalty of treble the value of such article."

Commenting upon this section, we said:

"The forfeiture provision does not mean necessarily that the article is subject to forfeiture whenever it appears that it was not mentioned in the entry or the declaration. The statute does not so declare, and as a penal statute it is not to be enlarged by implication to embrace cases not within its terms. The entry and declaration by the passenger are usually made upon the vessel, and often hurriedly, and omissions may occur in the documents from inadvertence or ignorance as well as from intention. The documents are executed in the presence of the customs officer, who administers the oath to the declaration, and who is the representative of the collector in receiving the entry; and, if these omissions are brought to his notice by the passenger, it would seem to be sufficient to satisfy the statute. If at any time while the entry is being made, and before it is completed, there is a disclosure by the passenger which is sufficient to put the customs officer upon inquiry as to the dutiable character of any of the contents of the packages, we think that within the meaning of the statute it is to be deemed that the articles were 'mentioned to the collector before whom such entry was made,' notwithstanding they were not mentioned in the documents. Of course, if the articles are mentioned in the entry or declaration, they are mentioned to the collector. Section 2802 does not make the element of fraudulent intent an ingredient of the cause of forfeiture."

It was further held that the jewelry, including (as the majority held) those articles which had been purchased by others and presented to her, was dutiable. The record showed that the claimant

Digitized by Google

made a declaration and entry for her baggage before it was examined; that such entry set forth the foreign cost of two articles which she had purchased abroad, and did not mention the cost price of any of the jewelry, nor did it contain anything to indicate that there was any jewelry in the baggage; that she did not, while the entry was being made nor before it was completed, make any disclosure to the customs officer sufficient to put him upon inquiry as to the dutiable character of any of the contents of the packages of baggage; and that subsequently, upon examination of her hand bag, the jewelry was found. Thereupon the judgment was reversed, and new trial ordered. The cause being remitted to the District Court was duly moved for trial at a stated term thereof April 14, 1903. The government thereupon moved for judgment upon the pleadings. Claimant was allowed to make certain amendments to her answer, and on June 13, 1903, judgment in favor of the United States was so entered, which judgment is now brought up for review.

The claimant contends:

1. That, since the mandate reversing the first judgment directed a new trial, entry of judgment upon the pleadings could not properly be directed. This proposition is wholly without merit. The taking of testimony is not essential to the "trial" of an action. If the pleadings present such a state of conceded facts as to entitle either party to relief, whether by dismissal or by judgment in favor of plaintiff, the action of the trial court making proper disposition of the cause after hearing argument is itself a trial.

2. That no notice of the motion was given, reference being had to section 537 of the New York Code of Civil Procedure. Such notice, however, is required only when some special application is to be made for judgment on the pleadings in advance of the trial. When the cause is regularly reached for trial, defendant is sufficiently advised that his pleadings, as well as the proofs he has provided, are before the court for consideration. He cannot properly complain of surprise if defects in his pleading are then brought to the court's attention. Moreover, in the cause at bar claimant was allowed to amend her answer, and it was not until after that privilege was availed of and argument heard that the judgment sought to be reviewed was entered.

3. That the case was not one in which judgment on the pleadings could properly be ordered. The information contained three counts, the third of which charged that the several articles of jewelry enumerated "were on June 24, 1899, found in the baggage of [the claimant] when she arrived in New York upon the steamship St. Paul, * * * which said goods, wares, and merchandise, as aforesaid, were not, at the time of making entry of such baggage, mentioned or declared to the said collector before whom such entry was made by the said [claimant] making the same; contrary to section 2802 of the Revised Statutes of the United States." As to the allegations contained in this third count, the amended answer denies that the articles were "found in her baggage," but admits that they were partly worn by her and partly "carried in an open hand bag, [which] upon inquiry as to whether she possessed any jewelry

Digitized by Google

was opened and shown to the customs official at the time that this claimant left said steamer." It avers that "the written declaration, and the only written declaration made and subscribed by her, was presented to her while the vessel was on its way through the harbor," and concedes that it was made before she left the steamer. Therefore the jewelry was found after the declaration was made. The contention that the hand bag in which it was found was not a part of her baggage is frivolous. It further avers that she declared certain linens which she had bought in Europe, but "did not declare any part of her jewelry, as she in good faith believed that such jewelry was not subject to any duty." Under our former ruling these are all the facts necessary to sustain judgment of forfeiture, the element of fraudulent intent not being an ingredient of the cause of forfeiture under section 2802.

4. It is contended that three of the rings and one scarf-ring were purchased abroad at a cost of $80; that they were within the proviso as to $100 in paragraph 697 of the tariff act of 1897 (Act July 24, 1897, c. 11, § 2, Free List, 30 Stat. 202 [U. S. Comp. St. 1901, p. 1689]); were not subject to duty, and could not, therefore, be forfeited under section 2802. We do not construe paragraph 697 as specifically exempting any particular articles from duty. The language is: "Provided * * * no more than one hundred dollars in value of articles purchased abroad by such residents of the United States shall be admitted free of duty upon their return." Articles purchased abroad, which are within the dutiable schedules, are still dutiable although brought back by a returning resident; but, when entered and declared, $100 in value of such articles—whether that sum be made up by an aggregation of several articles, or of parts of articles, or out of a single article—shall be allowed to such resident in making calculation as to what duty he shall pay. Section 2799, Rev. St. U. S. [U. S. Comp. St. 1901, p. 1872], indicates quite clearly that it is the passenger's duty to enter all such purchases, although some of them may fall below $100 in cost.

5. That the judgment in this case is inconsistent with the decision of this court in One Pearl Chain (I. J. Dulles, Claimant) v. The U. S., 123 Fed. 371.[1] There is a very essential difference between the two cases. Neither claimant made a proper entry of her jewelry; neither of them at the time of making entry mentioned orally to the customs officer that she had any jewelry with her, but one of them gave the officer a written declaration, which, in substance, advised him that she "had in her baggage and on her person wearing apparel [including jewelry] which she had purchased abroad." The other made no such declaration, oral or written.

The judgment is affirmed.

[1] 59 C. C. A. 499.

Digitized by Google

(132 Fed. 805.)

WESTERN UNION TEL. CO. v. CASHMAN.

(Circuit Court of Appeals, Fifth Circuit. October 4, 1904.)

No. 1,339.

1. LIBEL—TRANSMISSION BY TELEGRAPH COMPANY—PUNITIVE DAMAGES.
A telegraph company cannot be subjected to punitive damages because of the transmission and delivery of a libelous message by its agents, where no malice or wrongful intent is shown on the part of either the company or its agents, other than might be inferred from the acts themselves.

2. DAMAGES—EVIDENCE—WEALTH OF DEFENDANT.
In a case where the jury are not warranted in awarding exemplary damages, evidence to show defendant's wealth is inadmissible.

In Error to the Circuit Court of the United States for the Southern District of Mississippi.

Murray F. Smith and J. Hirsh, for plaintiff in error.
J. C. Bryson and O. W. Catchings, for defendant in error.

Before PARDEE, McCORMICK, and SHELBY, Circuit Judges.

PARDEE, Circuit Judge. The Western Union Telegraph Company is liable, if at all, in this case, for the acts of its agents in carrying on its business as a public carrier of private messages. Neither it nor its agents originated the message complained of as libelous, or had anything to do with it further than to transmit it in due course of business. Neither the company nor its agents were shown to have been actuated by any malice, ill will, or evil motive whatever. If the proof had shown —which it does not—that the defendant's agents were actuated by malice, ill will, or evil motive, then the question of ratification vel non by the company might be of importance; but, as there was no such evidence, we pass the matter with the suggestion that the reception by the company some time after the message complained of was received by the Oxford office of the earnings of the office in bulk, without specific knowledge of its sources, and the employment some 18 months later of the boy who, in the absence of the regular agent at Oxford, received the message, cannot be called a serious ratification. So far as damages were suffered by the plaintiff below from the transmission and delivery of the alleged libelous message, knowledge of which was confined to four agents of the company ordinarily ruled to secrecy, the telegraph company may be liable; but for the actual publication—the exploiting before the public which greatly injured plaintiff's good fame and brought him into public scandal and discredit—the telegraph company is not responsible, for the plaintiff of his own motion published in the newspaper under his own control the alleged libel, which theretofore had no public circulation, nor any private circulation except such as the plaintiff may himself have seen fit to give it.

The trial judge charged the jury as follows:

"If the jury find from the evidence that the telegram in question was transmitted over the wires of the defendant by one agent of defendant by

¶ 2. See Damages, vol. 15, Cent. Dig. § 499.

Digitized by Google

another agent of defendant, they will find for plaintiff, and assess his damages as shown by the testimony in the case. The law presumes that the plaintiff was damaged by the publication of a libel, and the law further presumes that the transmission by defendant, under the circumstances as shown by the testimony, of such words as were contained in the message in question, was negligent, or wanting in good faith, or a careless indifference to the rights of plaintiff; and if the message on its face is clearly susceptible of a libelous meaning, the jury may, in addition to such damages as will compensate the plaintiff for the injury, if any, done him, award other damages—exemplary or punitive damages—for the injury, if any, sustained by plaintiff; and in fixing the amount they may take into consideration the financial condition of the defendant."

And this substantially includes all the instructions the jury received. Analyzing the above, we find the following propositions:

(1) The defendant is liable if its agents transmitted the telegram in question, and the jury will assess damages shown by the testimony in the case.

(2) The law presumes (a) that the plaintiff was damaged by the publication of a libel; (b) that the transmission by defendant, under the circumstances as shown by the testimony, of such words as were contained in the message in question, was negligent, or wanting in good faith, or a careless indifference to the rights of plaintiff.

(3) If the message, on its face, is clearly susceptible of a libelous meaning, the jury will, in addition to such damages as will compensate the plaintiff for the injury, if any, done him, award other damages, exemplary or punitive, for the injury, if any, sustained; and in fixing the amount they may take into consideration the financial condition of the defendant.

On this writ it is contended that the last proposition in relation to awarding punitive damages is erroneous.

In Philadelphia, Wilmington, etc., Ry. Co. v. Quigley, 21 How. 213, 16 L. Ed. 73, which was an action for libel, the trial court charged the jury as follows:

"(2) And if the jury find for the plaintiff under the first instruction they are not restricted, in giving damages, to the actual positive injury sustained by the plaintiff, but may give such exemplary damages, if any, as, in their opinion, are called for and justified, in view of all the circumstances in this case, to render reparation to plaintiff, and act as an adequate punishment to the defendant."

In regard to this charge, which seems to be identical in meaning with the instruction herein complained of, the Supreme Court said:

"The second instruction contains the same error, and is objectionable for the additional reason that the rule of damages is not accurately stated to the jury. In Day v. Woodworth, 13 How. 371, 14 L. Ed. 181, this court recognized the power of a jury in certain actions of tort to assess against the tort feasor punitive or exemplary damages. Whenever the injury complained of has been inflicted maliciously or wantonly, and with circumstances of contumely or indignity, the jury are not limited to the ascertainment of a simple compensation for the wrong committed against the aggrieved person. But the malice spoken of in this rule is not merely the doing of an unlawful or injurious act. The word implies that the act complained of was conceived in the spirit of mischief, or of criminal indifference to civil obligations. Nothing of this kind can be imputed to these defendants."

Digitized by Google

This decision of the Supreme Court is quoted approvingly in Milwaukee, etc., Ry. Co. v. Arms, 91 U. S. 493, 23 L. Ed. 374. The court remarked:

"Although this rule was announced in an action for libel, it is equally applicable to suits for personal injuries received through the negligence of others. Redress commensurate to such injuries should be afforded. In ascertaining its extent the jury may consider all the facts which relate to the wrongful act of the defendant, and its consequences to the plaintiff; but they are not at liberty to go farther, unless it was done willfully, or was the result of that reckless indifference to the rights of others which is equivalent to an intentional violation of them. In that case the jury are authorized, for the sake of public example, to give such additional damages as the circumstances require. The tort is aggravated by the evil motive, and on this rests the rule of exemplary damages. It is insisted, however, that where there is gross 'negligence' the jury can properly give exemplary damages. There are many cases to this effect. The difficulty is that they do not define the term with any accuracy; and, if it be made the criterion by which to determine the liability of the carrier beyond the limit of indemnity, it would seem that a precise meaning should be given to it. * * * 'Gross negligence' is a relative term. It is doubtless to be understood as meaning a greater want of care than is implied by the term 'ordinary negligence.' But, after all, it means the absence of the care that was necessary under the circumstances. In this sense the collision in controversy was the result of gross negligence, because the employés of the company did not use the care that was required to avoid the accident. But the absence of this care, whether called gross or ordinary negligence, did not authorize the jury to visit the company with damages beyond the limit of compensation for the injury actually inflicted. To do this there must have been some willful misconduct, or that entire want of care which would raise the presumption of a conscious indifference to consequences. Nothing of this kind can be imputed to the persons in charge of the train; and the court therefore misdirected the jury."

And see Western Union Telegraph Company v. Eyser, 91 U. S. 495, 23 L. Ed. 377.

In Lake Shore, etc., Ry. Co. v. Prentice, 147 U. S. 101, 13 Sup. Ct. 261, 37 L. Ed. 97, the whole subject of compensatory and punitive damages in cases of tort is exhaustively considered, and we quote short extracts applicable to the case in hand:

"Exemplary or punitive damages, being awarded, not by way of compensation to the sufferer, but by way of punishment of the offender, and as a warning to others, can only be awarded against one who has participated in the offense. A principal, therefore, though, of course, liable to make compensation for injuries done by his agent within the scope of his employment, cannot be held liable for exemplary or punitive damages merely by reason of wanton, oppressive, or malicious intent on the part of the agent. * * * Though the principal is liable to make compensation for a libel published or a malicious prosecution instituted by his agent, he is not liable to be punished by exemplary damages for an intent in which he did not participate. In Detroit Post v. McArthur [16 Mich. 447], in Eviston v. Cramer [57 Wis. 570, 15 N. W. 760], and in Haines v. Schultz [50 N. J. Law, 481, 14 Atl. 488], above cited, it was held that the publisher of a newspaper, when sued for a libel published therein by one of his reporters without his knowledge was liable for compensatory damages only, and not for punitive damages, unless he approved or ratified the publication; and in Haines v. Schultz the Supreme Court of New Jersey said of punitive damages: 'The right to award them rests primarily upon the single ground: wrongful motive.' 'It is the wrongful personal intention to injure that calls forth the penalty. To this wrongful intent knowledge is an essential prerequisite.' 'Absence of all proof bearing on the essential question, to wit, defendant's motive, cannot be permitted to take the place of evidence, without leading to a most dangerous extension of

Digitized by Google

the doctrine respondeat superior.' 50 N. J. Law, 484, 486, 14 Atl. 488. No doubt a corporation, like a natural person, may be held liable in exemplary or punitive damages for the act of an agent within the scope of his employment, provided the criminal intent necessary to warrant the imposition of such damages is brought home to the corporation."

As this case shows no evil motive nor malice beyond that which the law infers from the wrongful act, nor that the wrongful act was conceived by the telegraph company or its agents in the spirit of mischief or criminal indifference to civil obligations, we are clear that the telegraph company is not liable in punitive damages.

On the trial, and over the objections of the telegraph company, the court admitted evidence showing the great corporate wealth of the defendant, evidently offered with a view of obtaining enhanced damages. As there was no evidence in the case warranting the jury to award more than compensatory damages, the evidence in question was improperly admitted. See Sedgwick on Damages, § 385, and Washington Gaslight Co. v. Lansden, 172 U. S. 534, 19 Sup. Ct. 296, 43 L. Ed. 543.

The judgment of the Circuit Court is reversed, and the case is remanded, with instructions to award a new trial.

(130 Fed. 746.)

THE LIVINGSTONE.

(Circuit Court of Appeals, Second Circuit. April 21, 1904.)

No. 99.

1. MARINE INSURANCE—TOTAL LOSS—EFFECT OF ABANDONMENT.

Neither the abandonment to the insurer of a vessel sunk in collision nor a bill of sale conveying the same vests the insurer with a right of action against the vessel in fault for the collision, which can exist only on the principle of subrogation arising out of the performance of the insurance contract.

2. SAME—VALUED POLICY—SUBROGATION ON PAYMENT OF TOTAL LOSS.

Where a ship sunk by collision and abandoned to the insurer, being an actual total loss, is insured by a valued policy, and the stipulated sum is paid to the owner, who subsequently recovers her actual value, which exceeds her insurance value, as damages from the vessel responsible for the collision, the insurer is only entitled to be reimbursed from such recovery by receiving back the amount it has paid out, with interest, and the insured is entitled to the remainder in payment of his uncompensated loss.

Appeal from the District Court of the United States for the Western District of New York.

For opinion below, see 122 Fed. 278.

This is an appeal by the Lackawanna Transportation Company et al. from a decree of the District Court for the Western District of New York, entered May 2, 1903, adjudging that the World Marine Insurance Company, and other insurance companies, interveners, be paid the entire remnants and remainder

¶ 1. See note at end of case.

Digitized by Google

of the moneys in the registry of the court, after paying certain court charges, and that the said amount be divided among the said interveners, pro rata, according to the amounts of insurance written by them, respectively, on the steamer Grand Traverse, which was sunk in Lake Erie, after collision with the steamer Livingstone, October 19, 1896. The Livingstone [D. C.] 87 Fed. 769; on exceptions to commissioner's report, 104 Fed. 918; on appeal, 113 Fed. 879, 51 C. C. A. 560. The Livingstone having been held solely at fault for the loss of the Grand Traverse and the value of the latter having been fixed at $37,500 and interest, a decree against the Livingstone and her stipulator was entered for $59,311.70, with interest and costs. The greater part of this sum was distributed by agreement between the parties. There still remains in the registry of the court the sum of $12,500 and interest, which is in dispute in this controversy. The insurance companies claim this amount by reason of an abandonment of the Grand Traverse to them after the collision. The libelants claim the fund as owners of the Grand Traverse, insisting that they are entitled to the difference between the actual value of the lost vessel, $37,500, and the value fixed in the insurance policies, $25,000, and that the underwriters, having been reimbursed for the full amount paid by them upon said policies, are not entitled to the balance which was recovered by the diligence and perseverance of the owners. The facts now under review are carefully and correctly stated in the opinion of the District Judge in 122 Fed. 278.

John G. Milburn and Harvey D. Goulder, for appellants.

Wilhelmus Mynderse, for appellees.

Before LACOMBE, TOWNSEND, and COXE, Circuit Judges.

COXE, Circuit Judge (after stating the facts). The amount in controversy was recovered by the unaided efforts of the libelants against the active opposition of the interveners. The $25,000 paid by them to the libelants upon the policies of insurance, has been returned. The $12,500 in the registry of the court represents the difference between the value of the Grand Traverse as fixed in the policies and the value as fixed by the court, before the insurers became parties to this action. If paid to the interveners they will realize from the transaction a clear profit of $12,500 and the libelants a corresponding loss. If paid to the libelants they and the interveners will receive from the party responsible for the collision the exact amount of their respective losses.

The question briefly stated is as follows: Where a ship, sunk by collision and abandoned to the insurer, is insured by a valued policy for $25,000 and this sum is paid to her owner who subsequently recovers $37,500, her actual value, as damages, from the vessel responsible for the collision, is the insurer entitled to the entire recovery or only the $25,000 paid by him under the policy? Viewed as an original proposition, to be determined solely by the fundamental rules of equity, it would seem that but one answer is possible. How can the court make a more equitable disposition of the fund than by disbursing it so that the status quo before the collision is re-established? The insurer gets back the money he has paid under the policy, the owner gets back the value of his ship, both are made whole, and neither is permitted to profit at the expense of the other. Such a result would certainly see equitable, but it must, of course, be sustained by authority. In our system of jurisprudence principle is reached through precedent. The rights of the interveners rest either upon abandonment, bill of sale or subrogation, or all combined. On

Digitized by Google

December 31, 1896, the libelants abandoned the Grand Traverse to the underwriters in the following words:

"The company has decided to abandon the ship and hereby gives notice of such abandonment as provided in the policies."

On the 7th of January, 1897, the underwriters wrote as follows:

"We have your favor of the 31st ult. making abandonment of the steamer Grand Traverse, which we hereby accept. * * * If you will send us proofs of loss and policies, we will at once proceed with settlement of total loss."

On the 22d of January thereafter the owners of the Grand Traverse executed to the underwriters a bill of sale of the "said steamer or vessel, together with the masts, bowsprit, sails, boats, anchors, cables, tackle, furniture and all other necessaries thereunto appertaining and belonging."

There can be no question that these acts of the owners transferred to the underwriters the physical property and all the right, title and interest which the owners had therein. It is not easy, however, to understand how these transfers alone vested in the insurers the right to proceed against the vessel responsible for the collision or the right to appropriate the entire proceeds of a recovery in excess of the insurance. The conveyance of the res did not carry with it the right to proceed against the wrongdoer. That right had previously vested in the ship owners and, in the absence of express words of transfer, remained so vested.

The Grand Traverse was an actual total loss, "a mere congeries of planks," lying at the bottom of Lake Erie and worth no more than the bubbles that rose to the surface above the wreck. There was, in fact, nothing to abandon and nothing to sell. "If the loss be actually total, as there is nothing to abandon, an abandonment can have no effect whatever." Parsons on Marine Ins. vol. 2, p. 110; Hall & Long v. Railroad Co., 93 Wall. 367, 20 L. Ed. 594. The sale of the ship did not carry with it choses in action against those who had previously damaged the ship any more than the sale of a horse vests in the purchaser a right to prosecute one who before the sale had injured the horse; any more than the assignment of a patent carries with it a right to recover for past infringements. The thing abandoned and sold was the worthless wreck and not the right to recover $37,500 from those who had caused the wreck. In order, therefore, to ascertain the true character of the title of the insurers to the fund in court we must look beyond the mere abandonment and sale to the source of that title, namely, the contract of insurance and to the equitable principles brought into being by the action of the parties thereunder.

The valuation clause in question is in these words:

"And it is also agreed and declared that the subject matter of this Policy as between the Insured and the said Company as far as concerns this Policy shall be and is as follows upon Hull Materials &c. valued at £3,605
Machinery Boilers &c. " " 1,545 £5,150."

The valuation clause was originally adopted in marine policies to avoid the difficulty and sometimes the impossibility of ascertaining with precision the value of the property insured. As this was the first step

Digitized by Google

in the accurate measurement of the loss the insurer and insured agreed upon a value which, as between them, was to be taken as the basis of subsequent calculations. Why the agreement of the parties upon a convenient basis of calculation should operate to change the principle upon which the insurer had, theretofore, been reimbursed to the extent of his payment under the policy, it is not easy to understand. The reason of the rule is plain. A contract of insurance is one of indemnity. The premium is supposed to be a full consideration for the risk. Nevertheless, where the insurer has paid the entire amount of the loss he becomes subrogated, to the extent of his payment, to whatever interest the insured has in the property and to the latter's right to proceed against one who has negligently caused the loss.

The doctrine of subrogation has its origin in equity, its purpose is indemnity and its object is attained when the insurer has been fully compensated. The doctrine cannot be invoked to consummate injustice; it does not permit one party to secure an unfair advantage over the other; it does not permit the insurer to speculate, or profit or drive an unconscionable bargain. When he is paid in full equity requires the return of the balance to the insured in payment of his uncompensated loss.

In Memphis, etc., Railroad v. Dow, 120 U. S. 287, 301, 7 Sup. Ct. 482, 30 L. Ed. 595, the Supreme Court says:

> "The right of subrogation is not founded on contract. It is a creature of equity; is enforced solely for the purpose of accomplishing the ends of substantial justice; and is independent of any contractual relations between the parties. All that the appellees can, in good conscience, demand, is reimbursement for their outlay in protecting the mortgaged property against the prior lien of the state. When relief to that extent is accorded, they will have no just ground to complain."

Again, in the leading case of Liverpool Steam Co. v. Phenix Ins. Co., 129 U. S. 397, 9 Sup. Ct. 469, 32 L. Ed. 788, the court say, at page 462, 129 U. S., page 479, 9 Sup. Ct., 32 L. Ed. 788:

> "From the very nature of the contract of insurance as a contract of indemnity, the insurer, upon paying to the assured the amount of a loss, total or partial, of the goods insured, becomes, without any formal assignment, or any express stipulation to that effect in the policy, subrogated in a corresponding amount to the assured's right of action against the carrier or other person responsible for the loss; and in a court of admiralty may assert in his own name that right of the shipper. The Potomac, 105 U. S. 630, 634 [26 L. Ed. 1194]; Phœnix Ins. Co. v. Erie Transportation Co., 117 U. S. 312, 321 [6 Sup. Ct. 750, 29 L. Ed. 873]."

See, also, Norwich Ins. Soc. v. Standard Oil Co., 59 Fed. 984, 8 C. C. A. 433; Fairgrieve v. Marine Ins. Co., 94 Fed. 686, 37 C. C. A. 190; The St. Johns (D. C.) 101 Fed. 469, 474, 475; Arnould (7th Ed.) § 1227.

We conclude, therefore, that the insurance companies, having paid the full amount stipulated in the policies, are entitled to recoup that sum and that neither the abandonment nor the subrogation permits them to appropriate the balance recovered from the wrongdoer.

It is undoubtedly true that this ruling is not in accord with the English decision in the North of England Association v. Armstrong, L. R. 5 Q. B. 244. That decision carries no greater weight in this

Digitized by Google

country than is compelled by the force of its reasoning, and, after careful consideration, we are unconvinced by its logic and are unable to accept its conclusions. It proceeds upon what, to our minds, is an unnecessarily harsh and inequitable exposition of the rights of the insured, based upon the assumed change in the law produced by what the Chief Justice considered a "new-fangled form of insurance." That he doubted the equity of his conclusion may be inferred from the following excerpt from the opinion:

"Therefore, though it certainly startles one a little that the underwriters, who have only paid £6,000, the estimated value, as stated in the policy and agreed upon between the parties, shall, if the vessel should prove to be equal to that £6,000, or worth more, get all that can be recovered in respect of the loss of the vessel, yet still I think that is an incident which arises from this novel form of policy in which the value of the vessel is taken at a fixed sum as agreed upon between parties."

This decision has been questioned even in England, Lord Blackburn saying, in the House of Lords:

"I own that if I had a similar case to decide, sitting in the Court of Error, I should pause before I said that it was rightly decided." Burnand v. Rodocanachi, L. R. 7 App. Cas. 333.

It has never been followed in this country to the extent of sustaining the position taken by the appellees.

The case of Mobile & M. R. Co. v. Jurey, 111 U. S. 584, 4 Sup. Ct. 566, 28 L. Ed. 527, is cited in refutation of the foregoing statement. This case arose under a policy of fire insurance and turned largely upon a question of practice under the Alabama Code. The Armstrong Case is cited by way of illustration, but the point now under consideration did not arise and was not decided. The action was brought in the name of the shippers of the burned cotton and their right to recover the full value was sustained, the court observing:

"Although the suit is brought for the use of the insurer, and it is the sole party beneficially interested, yet its rights are to be worked out through the cause of action which the insured has against the common carrier. The legal title is in the insured, and the carrier is bound to respond for all the damages sustained by the breach of his contract. If only part of the loss has been paid by the insurer, the insured is entitled to the residue. How the money recovered is to be divided between the insured and the insurer is a question which interests them alone, and in which the common carrier is not concerned."

The case of Mason v. Marine Ins. Co., 110 Fed. 452, 49 C. C. A. 106, 54 L. R. A. 700, is also cited, but the question there determined was whether the underwriters, having paid the full amount of the insurance, $51,175, were entitled, after abandonment and conveyance to them of the ship, to a fund of $7,879 awarded for demurrage occurring after the collision. It was held that they were entitled to this sum, but it is not perceived how the decision bears upon the question now in controversy.

The contention that the appellees are entitled to some consideration because they had written policies upon the Livingstone by which they bound themselves to pay any loss for which she might become legally liable seems to us irrelevant to the present issue.

A distinction is pointed out between the language of the policy issued by the Reliance Company and that of the policies issued by the other

Digitized by Google

companies, but we think the question suggested is disposed of by what has been said already.

This is also true of the question of costs and expenses.

We are dealing with a case where, through the efforts of the owners of a wrecked vessel, damages in excess of her insured value have been recovered against those responsible for her loss. The insurers not only refused to participate in the litigation which produced this fund, but persistently and actively opposed it. They have been, or will be, completely indemnified for the loss sustained by them in paying the insurance, and they now seek to appropriate the remainder of the fund which is also claimed by those whose exertions brought it into court. The title of the insurers, by virtue of the valued policies, abandonment and conveyance, to the physical property and to salvage, may well be conceded, as may also their right to share in the recovery to the extent of full and complete reimbursement for all losses and expenditures made by them incident to the insurance. We are fully convinced that equity and good conscience do not require the court to go further and permit them to realize an enormous profit from the transaction. No controlling authority compels such a decision; no principle of equity requires it. By limiting the recovery within the bounds of indemnity we are on safe and logical ground, where exact justice is done to both parties and where injustice to either is impossible.

The decree is reversed with costs of this appeal and the case is remanded to the District Court with instructions to enter a decree awarding the appellees interest on the sums paid by them during the time they were deprived of the use of said sums, and awarding the balance of the fund in court, after paying court fees and charges, to the libelants.

NOTE.

Subrogation of Insurer under Assignment of Rights of Insured.

I. In General.

[a] An insurer by paying a loss occasioned by the wrongful act of a third person thereby obtains an equitable assignment of the insured's cause of action against such person.

—(Me. 1855) Rockingham Mut. Fire Ins. Co. v. Bosher, 39 Me. 253, 63 Am. Dec. 618;

(Mass. 1847) Hart v. Western R. Corp., 54 Mass. (13 Metc.) 99, 46 Am. Dec. 719.

[b] (U. S. 1894) The cause of action which an insured has against a wrongdoer causing the loss is not assignable to the insurer, though on payment of the loss the latter has an equitable interest therein.—Over v. Lake Erie & W. R. Co. (C. C.) 63 Fed. 34.

[c] (Ark. 1891) An insurer which has paid a loss occasioned by the negligence of a third person is subrogated to the insured's claim for damages, without any formal assignment.—St. Louis, A. & T. Ry. Co. v. Fire Ass'n of Philadelphia, 55 Ark. 163, 18 S. W. 43.

[d] (Colo. 1893) Certain property having been burned by fires set out by a railroad's locomotives, the owner put in his claims to the road, which were allowed, and he gave the road a receipt for the money, releasing all claims to date. His claims did not, in terms, include certain hay destroyed in the same fires, on which he had insurance. The insurance company, having settled with him for said hay, sued the railroad for the amount of its loss. *Held*,

Digitized by Google

that the assured's assignment of his claim against the road was in law without effect, since his release purported to be in full.—Home Ins. Co. v. Atchison, T. & S. F. R. Co., 19 Colo. 46, 34 Pac. 281.

[e] (Iowa, 1871) A corporation insuring goods in the course of transportation on a vessel operating on the Mississippi river may, after the destruction of the goods, compromise the loss with the insured, take an assignment of the bill of lading and the insured's claim against the owners of the vessel causing the loss, and maintain an action against such owners for the full amount of the loss, notwithstanding that it exceeds the amount of the policy.—Home Ins. Co. v. Northwestern Packet Co., 32 Iowa, 223, 7 Am. Rep. 183.

[f] (Me. 1870) Where the building on which plaintiff held a policy of insurance was destroyed by fire set by a locomotive, and the insurance company paid the amount of the debt for which plaintiff held the property as security, and took an assignment of the claim against the railroad company, with the stipulation that any excess recovered by the insurers beyond the amount paid to him by them should belong to him, the insurers can recover in plaintiff's name against the railroad company for the whole injury.—Bean v. Atlantic & St. L. R. Co., 58 Me. 82.

[g] (Mass. 1882) A policy on mortgaged premises, payable in case of loss to the mortgagee as his interest may appear, provided that it should be void if the premises became vacated, and that the insurance "as to the interest of the mortgagee only therein" should not be invalidated by acts of the mortgagor; and that when a loss after a forfeiture is paid to the mortgagee the company should be subrogated to his rights to the extent of such payment, and might pay the full amount of the debt to the mortgagee, and receive an assignment of the mortgage. A loss by fire occurred while the premises were vacant, and, upon payment by the company to the mortgagee of the amount due on the mortgage, the latter assigned the same to it. *Held*, that a second mortgagee and owner of the equity could not redeem the premises from the first mortgage without paying to the company the full amount of the debt thereby secured.—Allen v. Watertown Fire Ins. Co., 132 Mass. 480.

[h] (Mich. 1901) Where insured goods belonging to a tenant were damaged by negligence of the landlord, and the tenant assigned his claim to the insurer, negligence of the insurer in assuming the risk was no defense in an action by it against the landlord, the insurer being under no obligation to the landlord to exercise care in insuring the risk.—United States Casualty Co. v. Bagley, 87 N. W. 1044, 129 Mich. 70, 8 Detroit Leg. N. 843, 55 L. R. A. 616, 95 Am. St. Rep. 424.

[i] (Minn. 1896) A mortgagor executed to the mortgagee a bond conditioned that he would discharge all claims for labor and material furnished for the building to be erected on the mortgaged premises, and all liens on account thereof, and save the mortgagee harmless therefrom, including expenses incurred in satisfying the same. A title insurance company issued a policy guarantying the mortgagee that the mortgage was a first lien on the premises, and agreed to indemnify him against prior liens. The mortgagor failed to pay certain claims which became liens on the premises superior to that of the mortgage, and the insurer paid off the same, and took an assignment of the bond of the mortgagee. *Held*, that the insurer had a cause of action on the bond to recover the amount paid to satisfy the lien.—St. Paul Title Insurance & Trust Co. v. Johnson, 64 Minn. 492, 67 N. W. 543.

[j] (N. J. 1880) G. and B. held first and second mortgages, respectively, upon lands which C. owned. C. had the buildings insured for $2,000 in an insurance company, on August 12, 1881; loss, if any, made payable to mortgagees as their interests appear. Policy was given to G. B. foreclosed under her second mortgage, and bought the property, receiving a sheriff's deed dated February 12, 1882. B. conveyed to V. E., who conveyed to complainant, P., by deed dated April 26, 1882. On the morning of February 10, 1882, the dwelling house was destroyed by fire, and the same afternoon the foreclosure sale was made. Eight days after fire, C. made proof of loss, and July 18, 1882, the insurance company, through its agent, O., obtained from G. an assignment of the first mortgage, by paying to G. the whole amount due thereon for principal and interest. *Held*, that the money paid for the mortgage of G. must be regarded

Digitized by Google

as so much money paid on account of the insurance money, and that the company was not entitled to subrogation of G.'s rights on making the payment.—Pearman v. Gould, 42 N. J. Eq. (15 Stew.) 4, 5 Atl. 811.

[k] (N. Y. 1871) Where a policy of insurance issued to the owner of mortgaged premises provided that the loss should be payable to the mortgagee, that in case of any change of title in the property insured the policy should be void, the interest of the mortgagee excepted, and that, in case of payment to the mortgagee for a loss for which the insurer would not be liable to the mortgagor, the insurer should be subrogated, and entitled to an assignment of the mortgage, and the premises were sold prior to loss, and the insurance money paid to the mortgagee after loss, it was not a payment on the mortgage, so that, the mortgage having been assigned to the insurers on such payment, it constituted a valid security.—Springfield Fire & Marine Ins. Co. v. Allen, 43 N. Y. 389, 3 Am. Rep. 711.

[l] (N. Y. 1878) The owner of a building, in compliance with a mortgage thereon, procured an insurance, "loss payable to the mortgagee," a savings bank that had an independent contract with the insurance company, by which all policies of the company held by the bank as mortgagee should be binding, and its interest absolutely insured, and providing for subrogation in case the policy should be void as to the mortgagor. The policy became forfeited as to the owner by a breach of condition. A loss occurring, the company paid it to the bank, taking an assignment of so much of the mortgage subject to the payment of the balance due the bank. *Held*, in a contest as to surplus moneys arising on foreclosure, that the contract and assignment thereunder were valid, and the company was entitled to the surplus.—Ulster County Savings Inst. v. Leake, 73 N. Y. 161, 29 Am. Rep. 115, reversing (1877) 11 Hun, 515.

[m] (N. Y. 1889) Defendants, who had made advances to the owners of a vessel, and were entitled to commissions for procuring a charter, took out a policy with plaintiff in the sum of $1,500, payable to defendants, "on account of whom it may concern." Payment after the loss of the vessel was refused, except on the execution of indorsements by defendants to plaintiff of a master's draft for disbursements, and an assignment of $1,500 of defendants' claim against the owners for advances. Held, that an implied warranty arose that the claims were existing ones, to which defendants had the title, and which they might transfer, and which at least had not been discharged by defendants' acts.—Phenix Ins. Co. v. Parsons, 56 N. Y. Super. Ct. (24 Jones & S.) 423, 4 N. Y. Supp. 621.

[n] (N. Y. 1889) After defendants had procured the insurance, the owners wrote them: "Please get advances insured, if you have not already done so, so that in case of loss you will not call on the owners for advances,"—to which defendants answered: "We have covered amount only to Buenos Ayres, presuming that the amounts due would be remitted from there." Upon the payment by plaintiff to defendants the latter credited the owners with the amount on the claim for advances. *Held*, that it sufficiently appeared that defendants held the policy for the benefit of the owners, in the sense that payment on it would extinguish the claim against the owners to that extent, to justify a jury in finding that there had been a breach of the implied warranty.—Phenix Ins. Co. v. Parsons, 56 N. Y. Super. Ct. (24 Jones & S.) 423, 4 N. Y. Supp. 621.

[o] (N. Y. 1889) The policy provided that in case of any agreement or act, past or future, whereby any right of recovery of the insured against third persons was lost, which would, on payment by the company, have belonged to it but for such agreement or act, the company would not be liable. *Held* that, as the arrangement between defendants and the owners extinguished the company's right to subrogation, it also extinguished the company's liability, and that the payment by the company was a sufficient consideration for the assignment.—Phenix Ins. Co. v. Parsons, 56 N. Y. Super. Ct. (24 Jones & S.) 423, 4 N. Y. Supp. 621.

[p] (Pa. 1872) An insurance was made to T., who gave a mortgage to W., and assigned him the policy as security, and W. assigned to E. T. afterwards conveyed the property insured to C., and assigned him the policy, but the insurance company refused to approve the assignment. E. afterwards became the owner of W.'s mortgage, and the company insured his interest as mort-

Digitized by Google

gagee. By the policy, on payment of a loss, the mortgagee was to assign the mortgage to the company. The property was burned, and E. received the amount of his insurance, and assigned the mortgage to the company. *Held*, that the assignment was properly made, that T. had no claim upon the money paid for the loss, and that the company might recover from T. the amount due on the mortgage.—Thornton v. Enterprise Ins. Co., 71 Pa. (21 P. F. Smith) 234.

[q] (Pa. 1892) The trustee of property destroyed by fire released defendant, whose negligence caused the fire, from all claims arising therefrom; it being also agreed that the release did not affect the trustee's claims against insurance companies for loss caused by the fire, which claims should be in addition to the consideration paid for the release. *Held*, that an assignment by the trustee of the claim against defendant, or a formal subrogation to its rights, was not necessary to the maintenance of an action against defendant by the insurance company.—People's Natural Gas Co. v. Fidelity Title & Trust Co., 150 Pa. 8, 24 Atl. 339.

[r] (Wis. 1880) Where an insurance company has been obliged to pay a loss caused by the negligence of a third person, it may maintain an action against such person for the amount it has been so obliged to pay, even without an assignment of the claim of the assured.—Swarthout v. Chicago & N. W. Ry. Co., 49 Wis. 625, 6 N. W. 314.

[s] (Wis. 1886) Where a town insurance company, organized under Laws 1872, c. 103, which confers on such companies the powers usually exercised by corporations, has paid a loss caused by the negligence of a railroad company, it may take an assignment of the whole claim for damages from the insured, though exceeding the amount paid by it, and recover the full amount thereof from the railroad company.—Hustisford Farmers' Mut. Ins. Co. v. Chicago, M. & St. P. Ry. Co., 66 Wis. 58, 28 N. W. 64.

[t] (Eng. 1896) The respondents paid a claim in respect of a loss occasioned by the negligence of the government, represented by the appellant. The insured assigned to them, on receiving the amount of the claim, an assignment of all rights of action against the government, subject to the stipulation that the assignment should not authorize the use of the insured's name in legal proceedings. *Held*, that there had been a valid assignment of a legal chose in action, and that it was not competent for the appellant to plead that the loss was not within the risks covered by the policy.—King v. Victoria Ins. Co. [1896] App. Cas. 250.

[u] (Eng. 1896) A payment honestly made by insurers in satisfaction of a claim by the insured under a policy granted by the insurers is such a settlement of a claim made under the policy as entitles the insurers to the remedies available to the insured. And when the insured have given a formal assignment of all their rights and causes of action in respect of the property insured, with the stipulation that the assignment shall not authorize the use of the name of the insured, such an assignment is a legal chose in action.—King v. Victoria Ins. Co. [1896] App. Cas. 250.

II. Right to Require Assignment and Effect of Failure or Refusal to Assign.

[a] (Ill. 1863) By one of the conditions of a policy of insurance issued to a mortgagee, the assured was required, in the event of a loss, to assign to the company the mortgage upon the premises insured, together with the debt secured thereby, or so much thereof as would be sufficient to pay the loss, and a refusal to execute such assignment was to operate to discharge the company from all liability under the contract. It was *held* a sufficient compliance with such condition to assign so much of the mortgage debt as would cover the amount of the insurance. The assured is not required to assign the entire debt when it exceeds the amount insured.—New England Fire & Marine Ins. Co. v. Wetmore, 32 Ill. 221.

[b] (Mass. 1851) A mortgagee, who, at his own expense, insures his interest in the property mortgaged against loss by fire, without particularly describing the nature of his interest, is entitled, in case of a loss by fire before payment

Digitized by Google

of the mortgage debt, to recover the amount of the loss of the insurers to his own use, without first assigning his mortgage, or any part thereof, to them.—King v. State Mut. Fire Ins. Co., 61 Mass. (7 Cush.) 1, 54 Am. Dec. 683.

[c] (Mass. 1865) A mortgagee of a building whose interest is insured by a policy providing that in case of payment of any loss to him he shall, at the time of payment, assign to the company so much of his interest in the mortgage as may not be necessary to extinguish the balance of the debt due thereon, is not prevented from making such assignment by an agreement, made before the issue of the policy, to convey the premises to another person, who, by the terms of the agreement, was to pay the expense and have the benefit of the insurance, and who paid such expense before the loss took place; and the full amount insured may therefore be recovered by such mortgagee.—Davis v. Quincy Mut. Fire Ins. Co., 92 Mass. (10 Allen) 113.

[d] (Minn. 1895) An insurance company, which by the express terms of its policy has been absolved from liability because of a stipulation contained in a bill of lading of the insured property, whereby the carrier liable for the loss is to have the benefit of the insurance, has the right to impose, as terms of payment of the loss, that it have the unqualified right to proceed against the carrier primarily liable to the insured.—Southard v. Minneapolis, St. P. & S. S. M. Ry. Co., 60 Minn. 382, 62 N. W. 442.

[e] (Mo. 1883) The trustee in a trust deed insured his interest in the property, and the policy provided that in case of loss he should assign to the insurer an interest in the trust deed equal to the amount of loss paid, provided the assignment should not prejudice the cestui's right to recover the amount of his loan. *Held*, that the trustee could not recover for any loss until he had made the assignment.—Dick v. Franklin Fire Ins. Co., 81 Mo. 103, affirming (1881) 10 Mo. App. 376.

[f] (N. Y. 1890) Cotton covered by two policies of insurance was destroyed while in the custody of a railroad company. The two insurers paid the owners of the cotton the full amount of their loss. *Held*, that any claim of the owners against the railroad company thereupon passed to the insurers by subrogation, and a subsequent assignment thereof to one of them by such owners was unavailing.—Platt v. Pennsylvania R. Co., 58 N. Y. Super. Ct. (26 Jones & S.) 587, 11 N. Y. Supp. 632.

[g] (N. Y. 1891) Where, on payment of loss under a policy insuring advances, the insured assign to the insurer their claim against the vessel and its owner for advances and commissions, such assignment passes to the insurer the insured's claim for commission for procuring a charter for the vessel, even though the claim for advances does not pass because it has been previously released.—Phœnix Ins. Co. v. Parsons, 129 N. Y. 86, 29 N. E. 87, modified (1891) 59 N. Y. Super. Ct. (27 Jones & S.) 142.

[h] (N. Y. 1891) Under an agreement with the owners of a vessel, defendant's advances thereon were to be insured by him at his own risk, and he procured the amount thereof, together with commissions, on procuring a charter, and expenses of insurance, to be indorsed as advances on an open policy he held with plaintiff, not informing plaintiff that the owners were not liable in case of loss, which under the terms of the policy vitiated it. The company paid the loss accruing, and took an assignment of defendant's alleged claim against the owners, which it prosecuted. Being defeated, it brought action against defendant. *Held*, that defendant could not object that the payment included other than advances.—Phœnix Ins. Co. v. Parsons, 59 N. Y. Super. Ct. (27 Jones & S.) 142, 13 N. Y. Supp. 615.

[i] (N. Y. 1891) The costs of the action against the owners could be recovered, though no notice of the suit was given to defendant; but a counsel fee could not be recovered.—Phœnix Ins. Co. v. Parsons, 59 N. Y. Super. Ct. (27 Jones & S.) 142, 13 N. Y. Supp. 615.

[j] (Pa. 1889) A policy provided that when the company "shall claim that the fire was caused by the act or omission of any person, * * * which created a cause of action, the party to whom the loss is payable * * * shall, on receiving payment, assign to this company such cause of action." The affidavit of defense averred that subrogation had been demanded, and that payment of the loss had been offered on receiving an assignment of the cause of

Digitized by Google

action against the gas company, whose negligence caused the loss, and that plaintiff had refused to make the assignment, and had released the gas company from liability. *Held*, that the affidavit stated a good defense.—Niagara Fire Ins. Co. v. Fidelity Title & Trust Co., 123 Pa. 516, 16 Atl. 790, 23 Wkly. Notes Cas. 171, 10 Am. St. Rep. 543.

[k] (Pa. 1889) A release by the insured of a gas company, whose negligence caused the loss, which would make performance of the covenant in the policy to assign claims for damages for losses either impossible or useless, would relieve the company from its concurrent covenant to pay.—Niagara Fire Ins. Co. v. Fidelity Title & Trust Co., 123 Pa. 516, 16 Atl. 790, 23 Wkly. Notes Cas. 171, 10 Am. St. Rep. 543.

[l] (Pa. 1889) The refusal of the insured to assign to the insurer his cause of action against a third person, whose negligence caused the loss, in the absence of a covenant to assign, is no defense to an action on the policy.—Insurance Co. of North America v. Fidelity Title & Trust Co., 123 Pa. 523, 16 Atl. 791, 23 Wkly. Notes Cas. 174, 2 L. R. A. 586, 10 Am. St. Rep. 546.

(132 Fed. 658.)

SHAW v. NATIONAL GERMAN-AMERICAN BANK OF ST. PAUL, MINN.

(Circuit Court of Appeals, Eighth Circuit. September 5, 1904.)

No. 2,041.

1. NATIONAL BANKS—POWER TO PURCHASE STOCK OF OTHER BANKS—LIABILITY FOR ASSESSMENT.

   A national bank has no power to invest its surplus fund in the stock of another national bank, and cannot be assessed thereon as a stockholder, although it actually made the purchase and held and received dividends on the stock.

In Error to the Circuit Court of the United States for the District of Minnesota.

Guy C. H. Corliss (F. A. Hart, on the brief), for plaintiff in error.

Edward P. Sanborn, for defendant in error.

Before SANBORN and VAN DEVANTER, Circuit Judges, and AMIDON, District Judge.

AMIDON, District Judge. The First National Bank of Pembina, N. D., failed December 21, 1897, and the plaintiff herein is the receiver thereof, duly appointed by the Comptroller of the Currency. In December, 1889, the defendant, the National German-American Bank of St. Paul, purchased from the former owner thereof 37 shares of the capital stock of the Pembina Bank with funds drawn from its own surplus. This stock and the certificate evidencing the same were, by an instrument in writing, duly transferred to the defendant. The purchase was properly entered in its books and records as an investment of its surplus, and so appeared down to the failure of the Pembina Bank, when it was charged off as a loss. The old certificate was promptly surrendered at the time of the purchase, and a new one taken in the name of the defendant. From that time it appeared upon the books and records of the Pembina Bank as the absolute owner of this stock, and received as such shareholder dividends aggregating $2,368. The present action is

Digitized by Google

brought to recover an assessment of 100 per cent. levied upon said stock by the Comptroller of the Currency. To an amended complaint setting forth these facts a general demurrer was interposed, which was sustained by the trial court, and, the plaintiff electing to stand upon his complaint, final judgment went against him. These are the only errors now complained of.

The record contains no fact which can properly distinguish this case from California National Bank v. Kennedy, 167 U. S. 362, 17 Sup. Ct. 831, 42 L. Ed. 198, and First National Bank v. Hawkins 174 U. S. 364, 19 Sup. Ct. 739, 43 L. Ed. 1007. Counsel for plaintiff asks us to re-examine the doctrines there announced by the Supreme Court. That, of course, we annot do. Upon the authority of those decisions the judgment is affirmed.

(132 Fed. 1.)

LOCKMAN v. LANG et al.

(Circuit Court of Appeals, Eighth Circuit. July 18, 1904.)

No. 1,923.

1. APPEAL—ASSIGNMENT OF ERRORS—FILING BEFORE ALLOWANCE INDISPENSABLE.

The filing of an assignment of errors before or at the time of the allowance of an appeal is indispensable under the eleventh rule of the Circuit Courts of Appeals (91 Fed. vi, 32 C. C. A. lxxxviii), and the appeal will be dismissed if the assignment is not thus filed.

2. SAME—CONDITIONAL ALLOWANCE.

An allowance of an appeal on condition that the petitioner give a bond in a fixed amount does not become effective until the bond is given and accepted, and the filing of an assignment of errors before or at the time of the approval of the bond is a filing within the time prescribed by the rule.

3. ERROR AND APPEAL TO REVIEW SAME RULINGS.

The practice of taking an appeal and a writ of error to review the same adjudication is not only permissible, but commendable, in cases in which counsel have just reason to doubt which is the proper proceeding to give jurisdiction to the appellate court.

4. SAME—ASSIGNMENT OF ERRORS.

Where in proceedings by appeal and by writ of error to review the same rulings the alleged errors are the same in both proceedings, the filing of a single assignment of errors accomplishes the purpose of rule 11, and is sufficient to sustain the proceeding requisite to obtain the review.

5. SAME—MATTER OF RIGHT—TAKING REQUISITE SECURITY ALLOWS.

An appeal is a matter of right, and it is allowed and the jurisdiction of the case is transferred to the appellate court by the acceptance by the proper court or judge of security upon the appeal within the time fixed by the statute.

6. SAME—CITATION AFTER TIME TO APPEAL HAS ELAPSED.

A citation is not jurisdictional. Where an appeal has been allowed by the taking of security within the statutory time, and the transcript of the record has been filed and the case has been docketed at the proper term of the appellate court, the failure to issue a citation within the time prescribed for the appeal does not detract from the jurisdiction of the reviewing court, or furnish ground for a dismissal of the appeal, but the appellate court will grant an opportunity to issue and serve a citation.

Digitized by Google

7. BANKRUPTCY—PLEADING—BANKRUPT HAS RIGHT TO OPPORTUNITY TO ANSWER PETITIONS AGAINST HIM.

An alleged bankrupt has a right to a reasonable time to answer petitions for his adjudication. A single day is not a reasonable time for an alleged bankrupt, who is not within the district, to answer an amended petition, which for the first time charges him with certain acts of fraud and bankruptcy.

(Syllabus by the Court.)

Appeal from the District Court of the United States for the District of Colorado.

See 128 Fed. 279, 62 C. C. A. 550.

Lester McLean (W. Scott Bicksler and Edmon G. Bennett, on the brief), for appellant.

H. W. Currey (William L. Dayton, on the brief), for appellees.

Before SANBORN, VAN DEVANTER, and HOOK, Circuit Judges.

SANBORN, Circuit Judge. This is an appeal from an adjudication of the bankruptcy of R. H. Williams, rendered on March 24, 1903. Since the proceedings in the District Court which are about to be considered, Williams has deceased, and Forrest Lockman, the administrator of his estate, has been substituted for him in this court. An appeal from the adjudication in bankruptcy was allowed to Williams on the day the judgment was rendered, and his bond upon the appeal was approved by the judge of the District Court on March 31, 1903. At the ensuing September term of this court this appeal was dismissed on the authority of Webber v. Mihills, 124 Fed. 64, 59 C. C. A. 578, because the assignment of errors was not filed before or at the time of the allowance of the appeal, as required by the eleventh rule of the Circuit Court of Appeals (91 Fed. vi; 32 C. C. A. lxxxviii). Lockman v. Lang (C. C. A.) 128 Fed. 279.[1] A motion for a rehearing was subsequently granted, because it appeared that the order which allowed the appeal was not absolute as in Webber v. Mihills, but was "upon the condition, nevertheless, that he [the alleged bankrupt] give bond on such appeal in the sum of one hundred dollars ($100)," and he gave the bond and filed his assignment of errors within the 10 days allowed for his appeal by the act of Congress.

The conditional order of allowance did not become effective until its condition was complied with, until the bond on appeal was given and accepted under it. If no bond had been given or approved, the court below would never have lost, and this court would never have gained, jurisdiction of the case. Hence an assignment of errors filed before or at the time of the acceptance of the bond was filed within the time prescribed by the rule of this court. Williams' assignment of errors was filed on March 31, 1903, at the time of the approval of his bond, and the appellee was not entitled to a dismissal of his appeal because the assignment of errors was not filed at an earlier date. Simpson v. First National Bank, 129 Fed. 257, 63 C. C. A. 371.

It is now contended, however, by counsel for the appellees, that this appeal should be dismissed because the specifications of error

[1] 62 C. C. A. 550.

Digitized by Google

are preceded by the statement that the bankrupt "files the following assignments of error, upon which he will rely in the prosecution of his writ of error in this, the above-entitled cause," and because he prayed and obtained a writ of error to review the judgment against him at the time that he filed this assignment of errors and gave his bond on appeal, and he did not procure the issue of a citation upon the appeal until May 13, 1903, after the time for taking his appeal had elapsed. Through abundance of caution, counsel for Williams sued out a writ of error, and also procured the allowance of an appeal to review the same adjudication. The alleged errors upon which he relied to reverse the judgment against him were the same in each proceeding. The purpose of an assignment of errors is to inform the court and the counsel for the opposite party of the ground of the attack upon the rulings of the trial court. The practice of taking an appeal and a writ of error to review the same adjudications is not only permissible, but commendable, in cases in which counsel have just reason to doubt which is the proper proceeding to give jurisdiction to the appellate court. In such cases the reviewing court will consider both proceedings, will dismiss that one which is ineffective, and will review the rulings of the court below in accordance with the rules of the method applicable to the nature of the case before it. McFadden v. Milling Co., 97 Fed. 670, 672, 38 C. C. A. 355, 357; Files v. Brown, 124 Fed. 133, 136, 59 C. C. A. 403, 406; Hurt v. Hollingsworth, 100 U. S. 100, 102, 25 L. Ed. 569; Plymouth Min. Co. v. Amador Canal Co., 118 U. S. 264, 269, 6 Sup. Ct. 1034, 30 L. Ed. 232; Hooven, Owens & Rentschler Co. v. John Featherstone's Sons, 49 C. C. A. 229, 234, 111 Fed. 81, 86. The law never requires, and courts ought never to demand, the conduct of futile proceedings. Where, in proceedings both by writ of error and by appeal to review the same rulings or adjudications, the errors alleged are the same in each proceeding, a single assignment of errors as completely accomplishes the object of rule 11 of this court (91 Fed. vi; 32 C. C. A. lxxxviii) as the filing of an assignment in each proceeding, and it is accordingly ample to sustain the proceeding requisite to invoke the jurisdiction of this court. The appeal cannot be dismissed because Williams failed to file a second assignment of errors containing the same specifications as those contained in the assignment filed in his proceeding to obtain the writ of error.

Was the failure to procure the issue of a citation until after the time to take the appeal had elapsed fatal to the jurisdiction of this court? In support of the contention that this question should be answered in the affirmative counsel cite Norcross v. Nave & McCord Mercantile Co., 101 Fed. 796, 42 C. C. A. 29, and Ruby v. Atkinson, 35 C. C. A. 458, 93 Fed. 577. But this issue has been determined otherwise by the Supreme Court in terms so clear and positive that the question is no longer open to debate. In Jacobs v. George, 150 U. S. 415, 416, 14 Sup. Ct. 159, 37 L. Ed. 1127, Chief Justice Fuller, in delivering the unanimous opinion of that court, said:

"It must be regarded as settled that: (1) Where an appeal is allowed in open court, and perfected during the term at which the decree or judgment

Digitized by Google

appealed from was rendered, no citation is necessary. (2) Where the appeal is allowed at the term of the decree or judgment, but not perfected until after the term, a citation is necessary to bring in the parties; but if the appeal be docketed here at our next ensuing term, or the record reaches the clerk's hands seasonably for that term, and legal excuse exists for lack of docketing, a citation may be issued by leave of this court, although the time for taking the appeal has elapsed. (3) Where the appeal is allowed at a term subsequent to that of the decree or judgment, a citation is necessary, but may be issued properly returnable, even after the expiration of the time for taking the appeal, if the allowance of the appeal were before. (4) But a citation is one of the necessary elements of an appeal taken after the term, and if it is not issued and served before the end of the next ensuing term of this court, and not waived, the appeal becomes inoperative."

As there are no terms in bankruptcy, it is conceded that a citation was necessary in this case, because the appeal cannot be said to be perfected at the term at which the judgment below was rendered. Nevertheless the appeal was perfected by the acceptance of the bond within the statutory time and by the docketing of the case in this court at the ensuing term. In this way the jurisdiction of the appellate court was successfully invoked. The case was transferred from the jurisdiction of the District Court to that of the Court of Appeals. Sage v. Railroad Co., 96 U. S. 712, 715, 24 L. Ed. 641; Draper v. Davis, 102 U. S. 370, 371, 26 L. Ed. 121; Brandies v. Cochrane, 105 U. S. 262, 26 L. Ed. 989; National Bank v. Omaha, 96 U. S. 737, 24 L. Ed. 881. A citation to appear at the hearing in the appellate court is not jurisdictional in its nature. Its only purpose is to give notice to the appellees that the appeal will be prosecuted, so that they may appear and have a hearing if they desire. It is a part of the procedure prescribed not to give jurisdiction to the appellate court, but to secure to the appellees a fair opportunity to present to that court their arguments in support of the decision below. If, through accident or mistake, the citation has been omitted, and no notice has been given to the appellees of the hearing, the appellate court has ample power to direct its issue and to continue the case until reasonable notice of the hearing has been given. But it may not dismiss an appeal, which is a matter of right, and which is duly allowed by the trial court by the mere acceptance of security for its prosecution (Simpson v. First National Bank [C. C. A.] 129 Fed. 257, 260),[2] until an opportunity to give the requisite notice has been furnished, whether the application for the citation is made before or after the statutory time for the appeal has elapsed (Dodge v. Knowles, 114 U. S. 436, 438, 5 Sup. Ct. 1108, 29 L. Ed. 144; Hewitt v. Filbert, 116 U. S. 142, 144, 6 Sup. Ct. 319, 29 L. Ed. 581; Mattingly v. Railroad Co., 158 U. S. 53, 56, 15 Sup. Ct. 725, 39 L. Ed. 894; Evans v. State Bank, 134 U. S. 330, 331, 10 Sup. Ct. 493, 33 L. Ed. 917; Altenberg v. Grant, 28 C. C. A. 244, 246, 83 Fed. 980, 982; Railroad Equipment Co. v. Southern Ry. Co., 34 C. C. A. 519, 522, 92 Fed. 541, 544). The appeal in this case was duly allowed, and the case was transferred to the jurisdiction of this court by the acceptance of the security offered by Williams on March 31, 1903, within the ten days prescribed for the appeal. The transcript of the record was filed and the case was docketed and heard in this court at its next ensuing term. The citation was issued on May 13, 1903, ten days after the time to take the appeal

[2] 63 C. C. A. 371.

Digitized by Google

had elapsed. It was served upon counsel for the appellees on May 27, 1903, more than three months before the opening of the ensuing September term of this court at which the appeal could first be heard. The failure to issue an earlier citation did not detract from the jurisdiction of this court, nor did it furnish any reason for the dismissal of this appeal. The motion to dismiss the appeal is accordingly denied.

When we turn to the merits of the case, we find much in the briefs of counsel concerning the regularity of the allowance of a bill of exceptions which is incorporated in the record. But no bill of exceptions was requisite to enable this court to review the rulings of the court below in this case, because it is a proceeding in equity, and the appeal presents the entire record to the appellate court. That record discloses every fact necessary to a determination of the case without reference to the bill of exceptions, and that bill is here dismissed.

On January 8, 1903, George P. Lang and Charles J. Becker filed a petition in bankruptcy in the District Court for the District of Colorado against R. H. Williams of Hot Springs, Ark., in which they alleged that for the greater portion of six months preceding the date of the filing of their petition Williams had his domicile in the state of Colorado; that they had a judgment against him for $2,344.85; that he owed $20,000, and was insolvent; that on the ——— day of December, 1902, he had conveyed, transferred, concealed, and removed a part of his money and property with intent to defraud all his creditors; that on December 26, 1902, while he was insolvent, he had transferred a portion of his money and property to one of his creditors, with intent to prefer him to his other creditors, and that on ——— day of December, 1902, he permitted one of his creditors to obtain a preference over his other creditors through legal proceedings, and failed, at least five days before a sale or final disposition of his property affected by such preference, to vacate or discharge it. This petition did not disclose what part of his money or property had been transferred or concealed to defraud his creditors, or what creditors had secured preferences, or where they had obtained them, or what the legal proceedings by which the preference resulting from them had been secured, were, or where they had been taken. If not demurrable, the petition was clearly vulnerable to a motion to make definite and certain. Upon this petition and an affidavit that Williams could not be found in Colorado, and that personal service upon him could not be made, the District Court ordered him to appear to answer the petition, and directed that its order should be published for six consecutive weeks in the Denver Examiner, a newspaper printed in the county of Denver, in the state of Colorado. On March 23, 1903, the court below denied a motion which had been made by the attorneys of Williams to dismiss the petition in bankruptcy, and ordered that the petitioning creditors should be permitted to file an amended petition within one day. On the morning of the next day, March 24, 1903, the petitioners did file an amended petition, in which they alleged the following acts of bankruptcy, and these

Digitized by Google

only, to wit: (1) That on December 2, 1902, Williams had $50,000 in the Arkansas National Bank of Hot Springs in the state of Arkansas; that he placed $12,000 of this money or of some other money in the hands of the Security Bank of Memphis, Tenn., or in the hands of Ralph Davis, and that he had since concealed the remainder of the $50,000 in the hands of unknown parties with intent to defraud all his creditors. (2) That while insolvent, and within four months preceding the filing of the petition in bankruptcy, he transferred $10,000 to Howard Bland, one of his creditors, $1,000 to J. C. George, another of his creditors, and $500 to Sam Watts, a third creditor, with intent to prefer them over his other creditors. And (3) that he permitted Howard Bland to obtain a preference over his other creditors through legal proceedings in the circuit court of Garland county, in the state of Arkansas. Immediately after the filing of this petition the attorneys of Williams moved the court to strike it from the files. Their motion was denied. They then made a motion for the allowance to them of further time to answer the amended petition. The court denied their motion, and on the same day, March 24, 1903, adjudged Williams a bankrupt. The appeal challenges this adjudication.

None of the acts of bankruptcy alleged in the amended petition were pleaded or intimated in the original petition. No notice was given to Williams or to his attorneys that any charge of the commission of these acts was or would be made until the amended petition was filed on the morning of March 24, 1903. Then for the first time the attorneys of the alleged bankrupt received notice of the charges against which they were retained to defend their client. He was not in the court nor in the district in which the court was held. His attorneys asked for time to answer the petition, and they were denied even a day within which to communicate with their client and prepare an answer to charges of fraudulent acts, involving tens of thousands of dollars, alleged then for the first time to have been committed hundreds of miles distant from the forum in which the proceeding was pending. The amended petition sought, and the decree which followed it wrought, a transfer of all the property of a citizen from him to another. A proceeding in bankruptcy is a proceeding in equity. Bardes v. Hawarden Bank, 178 U. S. 524, 535, 20 Sup. Ct. 1000, 44 L. Ed. 1175; Swarts v. Siegel, 54 C. C. A. 399, 402, 117 Fed. 13, 16; In re Rochford, 59 C. C. A. 388, 393, 124 Fed. 182, 187. If it is so summary that it is not governed by the specific times fixed for pleading and for the taking of evidence by the rules and practice in equity, it is not so summary that rights of person or of property may be taken from the parties to it without opportunity to frame or to try the issues that are tendered. It is so analogous to a suit in equity that no departure from the rules and practice in chancery so radical as to deprive a litigant of a fair opportunity to answer charges against him and to produce evidence in his defense should for a moment be permitted. The thirty-fourth rule in equity provides:

"Upon the overruling of any plea or demurrer the defendant shall be assigned to answer the bill or so much thereof as is covered by the plea or de-

Digitized by Google

murrer on the next succeeding rule day or at such other period as consistently with justice or the rights of the defendants the same can in the judgment of the court be reasonably done."

This is a just and reasonable rule. It gives to a defendant the opportunity and confers upon him the right to answer the averments of his adversary after he has unsuccessfully challenged their legal sufficiency. Files v. Brown, 124 Fed. 133, 142, 59 C. C. A. 403. 412, and cases cited. The order of the court below deprived Williams of this right and opportunity. It denied his counsel reasonable time to communicate with their client and to prepare his answer to averments presented for the first time on the day when the order was made and the judgment against him was rendered.

The order and adjudication were alike erroneous because they deprived the defendant of his right to answer and defend against the charges of fraud in the amended petition, and they must accordingly be reversed, and the case must be remanded to the court below, with directions to enter an order to the effect that the appellant may answer the amended petition within 30 days after the filing of the mandate in that court, and to take further proceedings not inconsistent with the views expressed in this opinion; and it is so ordered.

(132 Fed. 7.)

BOOKER v. CROCKER.

(Circuit Court of Appeals, Eighth Circuit. July 28, 1904.)

No. 2,020.

1. MORTGAGE—CO-BONDHOLDERS' PURCHASE OF LIENS—CONTRIBUTION.
   One of several holders of bonds secured by a common mortgage, who purchases superior liens upon or titles to the mortgaged property, takes them in trust for his co-bondholders upon condition that within a reasonable time after they receive notice of his purchases they contribute to him their proportionate shares of the amounts he paid for them. A community of interest in a common title or security involves a mutual obligation not to impair it.

2. SAME—PROPORTIONATE SHARE MEASURED BY PAR VALUE OF BONDS.
   The proportionate share of each bondholder in the liens purchased and in the expenses thereof is measured by the par value of the bonds which he holds, and not by the amount he paid for them.

3. SAME—ONE WHO CONTRIBUTES, SHARES IN LIENS OR TITLES UPON OTHER PROPERTY PURCHASED TO PROTECT COMMON SECURITY.
   Where the liens or titles purchased to protect the common security also cover other property not subject to the common mortgage, a bondholder who contributes his share of the expenses of their purchase acquires a like share in the liens or titles upon property thus purchased which is not subject to the mortgage.

(Syllabus by the Court.)

Appeal from the Circuit Court of the United States for the District of South Dakota.

Harris Richardson, for appellant.

J. W. Boyce (R. H. Warren, C. O. Bailey, and J. H. Voorhees, on the brief), for appellee.

Before SANBORN, VAN DEVANTER, and HOOK, Circuit Judges.

Digitized by Google

SANBORN, Circuit Judge. In this case the complainant below, John Lee Booker, has appealed from a decree in his favor which secures to him 6 47/1000 per cent. of 200 acres of land near the city of Sioux Falls, in the state of South Dakota, upon condition that he pays to the defendant, Charles T. Crocker, $4,428.29 and interest within 60 days from the date of the decree. This decree also quiets the title to this land in the defendant if the complainant fails to make this payment.

On May 11, 1896, a mortgage was made upon this tract of land to secure the payment of 400 bonds of $1,000 each. On October 1, 1897, the defendant, Crocker, loaned to the mortgagor $48,168.69, and took its note secured by 145 of these bonds. The bonds were afterwards sold under the pledge, and purchased by him for about 25 per cent. of their par value. He acquired other bonds, some at this rate and perhaps others at different rates, until he held bonds of the par value of $357,300. Booker, the complainant, purchased 23 bonds secured by this mortgage in the month of January, 1897, and paid for them about their par value. In this way each of these parties came to have bonds secured by the same mortgage after October 1, 1897. Subsequent to this date Crocker purchased various liens upon the mortgaged property which were superior to the lien of the mortgage, and he paid taxes, premiums on insurance, and other expenses for the purpose of preserving and protecting the security for the bonds, and the complainant recovered the decree in this case upon the ground that there was such a fiduciary relation between him and the defendant that he was entitled to share in the benefits which Crocker secured by the purchase of the superior liens for the purpose of protecting their common security.

Community of interest in a common title or security implies a mutual obligation not to impair it. It creates such a relation of trust and confidence that it is inequitable to permit one of the parties in interest to do anything to the prejudice of others, and when one of them obtains superior titles or liens he holds them in trust for the benefit of all who share in the common title or security, and who, within a reasonable time after notice of his purchase, contribute their share of his necessary expenditures. The complainant and the defendant were co-cestuis que trust under the trust deed to the International Trust Company, which constitutes the mortgage. They were co-bondholders secured pro rata by the same mortgage upon the same property, and prior liens upon or superior titles to this common property purchased by either vested in him in trust for both. Jackson v. Ludeling, 21 Wall. 616, 622, 22 L. Ed. 492; Lloyd v. Chesapeake, O. & S. W. R. Co. (C. C.) 65 Fed. 351, 357; Rothwell v. Dewees, 2 Black, 613, 619, 17 L. Ed. 309; Van Horne v. Fonda, 5 Johns. Ch. 388, 407; Moore v. Ware, 38 Me. 496, 498; Horton v. Maffitt, 14 Minn. 289, 292 (Gil. 216), 100 Am. Dec. 222; Funk v. McReynolds' Adm'rs, 33 Ill. 481, 497; Gossom v. Donaldson, 18 B. Mon. 230, 238, 68 Am. Dec. 723. Neither this principle nor the general equity of the decree is challenged by either of the parties to this suit. The defendant has taken no cross-appeal, and has thereby conceded, for the purpose of the hearing in this court, that the parties were co-cestuis que trust under the mortgage when the defendant

Digitized by Google

purchased the prior liens, and that he took them in trust for his co-bondholders. Guarantee Co. of North America v. Phenix Ins. Co., 59 C. C. A. 376, 378, 379, 124 Fed. 170, 172, 173. The appellant admits the facts and the law upon which the decree is founded, but objects to certain minor details of it. We turn to the consideration of his objections.

Under the principle of equity to which reference has been made the complainant was required to pay his due proportion of all the moneys which the defendant had necessarily expended to protect and preserve the common security. On September 22, 1898, he paid $3,850 for the lien by judgment of Pettigrew & Tate, and in July, 1898, he paid $5,600 for the lien by contract of the Fred W. Wolf Company. The decree conditions the recovery of the complainant with the repayment by him to the defendant of his proportionate share of the amounts which the latter expended in making these purchases. This requirement is specified as error because the parties made an agreement on July 9, 1901, which relates to this subject. That agreement was made under these circumstances: There was a mechanic's lien upon 360 acres of land, 160 acres of which were covered by this mortgage, while 200 acres were free from it. That lien was anterior in time and superior in equity to the lien of the mortgage, and a judgment had been rendered upon it. On July 30, 1900, the 360 acres were sold under this judgment to the defendant, Crocker, in a single tract, for $36,357.50. A year was allowed for a redemption from this sale by the statutes of the state of South Dakota. As the end of this year was approaching, and on July 9, 1901, Crocker made a written agreement with the complainant that he would "hold the title to the two hundred (200) acres of land of the Northwestern Packing Company at Sioux Falls, S. D., together with the plant thereon, bid off by me at sale on foreclosure of mechanic's lien, in trust for the said Booker and myself as bondholders under the bonds secured by the trust deed given to the International Trust Company of Boston by said packing company, the said Booker to have a right to his pro rata interest in said lien and any title to said property which may be acquired thereby upon the payment to me at any time before the right to redeem from the foreclosure of said trust deed shall expire of his pro rata share of the sum bid by me upon the sale upon the foreclosure of said mechanic's lien, with interest thereon at the rate of seven per cent. per annum, the amount bid on such sale to be pro rated between us according to our respective holdings of the bonds secured by said trust deed." The bill in this suit counted chiefly upon this agreement, and it was filed for the purpose of enforcing the trust declared by it. This declaration of trust or contract was assailed by the defendant on various grounds; among others, that it was unilateral, that it was without consideration, and that it contained no description of the lands to be affected by it. The court below held the contract invalid, refused to limit the payments required of the complainant to his share of the amount bid by the defendant at the sale under the mechanic's lien, and conditioned his recovery by the payment of his share of all the expenditures necessarily made by Crocker to protect the common security. This was a just and equitable ruling, and it ought not to be disturbed on account of

Digitized by Google

the terms of this contract. Laying aside the other objections that it was without consideration and that it was unilateral, it is sufficient to condemn it that it contained no definite description of the 200 acres, which, by its terms, Crocker agreed to hold in trust for himself and the complainant. The description in the agreement is of the "two hundred (200) acres of the Northwestern Packing Company at Sioux Falls, S. D., together with the plant thereon, bid off by me [Crocker] at sale on foreclosure of mechanic's lien." But the fact is that he bid off 360 acres in one lot at the sale, so that the description of the 200 acres which he bid off fails to point out what particular 200 acres of the 360 it was intended to describe. It reads that the land it refers to is the 200 acres on which the plant is situated. But the fact is that the plant is situated on 160 acres, and the agreement fails to disclose what 40 acres is to be added to the 160 acres upon which the plant is situated to make the 200. It provides that the complainant shall receive the pro rata share of the mechanic's lien and title to the 200 acres which he has in the mortgage securing his bonds. It would be a natural inference that the lands here described consisted of the 200 acres covered by the mortgage, if the mortgage covered 200 acres of the 360 acres bid off at the sale. But the mortgage covers only 160 acres of the 360 sold under the mechanic's lien, while it includes 40 acres that were not covered by the mechanic's lien, or included in the sale under it. The description of the 200 acres in the contract of July 9, 1901, is not certain, and it has not been made certain by the evidence in the record in hand. It is too indefinite to found a decree upon, and the court rightly based the relief it granted upon the fiduciary relation of the parties.

Another specification of error is that the court determined the proportionate interest of the parties in the lien of the mortgage and their proportionate shares of the necessary expenditures made to protect it by the par value of the bonds which they held, while it should have determined them by the respective amounts which they paid for their bonds. But there was no fiduciary relation between the parties before they bought their bonds. They occupied no such relation in their purchases of bonds, and hence were entitled to no accounting each with the other on that account. If all the bonds specified in the mortgage had been issued, each bond would have brought to its purchaser $^{1}/_{400}$ of the common security, whether he paid $1 or $100 for it, because the benefits and the proceeds of the mortgaged property were pledged to secure each of the 400 bonds pro rata. The price at which these parties bought their bonds was not, therefore, material, and their respective interests and liabilities were rightly measured by the par value of the bonds they held. Jackson v. Ludeling, 21 Wall. 622, 22 L. Ed. 492.

The next objection to the decree is that, while it requires the complainant to pay 6 $^{47}/_{1000}$ per cent. of the amount paid by Crocker for the Pettigrew & Tate judgment and for the title procured at the sale under the judgment upon the mechanic's lien, it secured to him a share in the 200 acres covered by the mortgage only, while these liens attached to other lands which were not described in the mortgage. The objection must be sustained. When one of those who have a community of interest in a common title or security purchases

Digitized by Google

a prior lien or title to protect it, he holds the entire lien or title in trust for all who share with him the community of interest in the common subject. When one of these contributes his full share of the amount expended to make the purchase, he thereby becomes entitled to a like share in all the benefits of the liens or titles purchased. If they cover both the property in which the parties have a community of interest and other property in which they were not before interested, he who contributes his share after the purchase is as much entitled to his share in the lien upon the outside property as he who originally made the purchase. The complainant is entitled upon payment of his share of the expenses of purchasing the title under the mechanic's lien and the lien of Pettigrew & Tate to all the benefits derived from those purchases, including those derived from the property that is not covered by the mortgage, as well as those derived from that property. He must, however, as a condition of this measure of relief, pay his proportionate share of the expenses which the defendant has paid, if any, to perfect these liens and titles upon the lands not described in the mortgage, and to preserve the property to which they attach.

There is another objection of the same nature which cannot be sustained. It is that the complainant is entitled to a share of a mortgage of $150,000 which was given to Crocker by the packing company on December 20, 1897. The claim is made that the liens purchased by Crocker were paid or secured by this mortgage, so that when the complainant pays his share of the moneys expended to purchase these liens he is, in equity, entitled to share in this mortgage. The evidence does not lead to the conclusion that any of these liens were ever paid. It establishes, so far as it establishes anything upon the subject, that Crocker took this mortgage as collateral security for expenditures which he had made and might make to protect and preserve the property of the mortgagor, and that he has expended tens of thousands of dollars more than the amount of this mortgage for this purpose. The record does not disclose with any such clearness or certainty as is requisite to warrant a decree what particular expenditures were secured by this mortgage for $150,000, or whether or not those made for the purchase of the Pettigrew, the mechanic's, and the Wolf Company liens were in any way protected by it.

Nor does it satisfactorily appear, as counsel insist, that the taxes, insurance, and other expenses paid by Crocker to preserve and protect the property and the improvements which constitute the 200 acres were ever paid or secured by this mortgage for $150,000. Their payment was necessary for the protection of the property covered by the first mortgage, and it is the duty of the complainant to pay his share of them as a condition of receiving the benefit of the security. The complainant failed to prove that he was entitled to any interest in the mortgage for $150,000.

Two hundred acres of land were charged with the lien of the mortgage in which the parties to this suit had a common interest. Forty of these 200 acres, in the southeast quarter of the northwest quarter of section 25, township 101, of range 50, were not subject to the mechanic's lien. The decree nevertheless quiets the title in this tract in

Digitized by Google

the defendant unless the complainant pays to him 6 47/1000 per cent. of the entire amount which he paid to protect the mortgage, including the amount paid at the sale under the mechanic's lien. This is an obvious error. Since the mechanic's lien was not a charge upon these 40 acres, the complainant was entitled to his share of the security furnished by the mortgage upon them without paying any part of the purchase price of the land sold under the mechanic's lien which did not cover them.

There are many other errors alleged, but a careful examination of the record satisfies that no others exist. The decree is founded on a well-established principle of equity, and it is broadly right, but in some minor particulars must be corrected. First. The title to the southeast quarter of the northwest quarter of section 25 should not be quieted in the defendant in case the complainant fails to pay the amount, the payment of which shall be required by the court as a condition of a decree that he shall receive a share in the Pettigrew, mechanic's, and Wolf Company liens and in the titles thereunder. Second. If the complainant should make the payment required of him, he should recover 6 47/1000 per cent. of the title under the mechanic's lien, of the Pettigrew judgment, and of all titles and property which those liens have secured to the defendant, but only upon condition that he pays in addition to the amount specified in the present decree 6 47/1000 per cent. of the additional amounts which Crocker has expended to protect these liens and titles and of the interest thereon. Unless the parties stipulate the necessary facts, this case should again be referred to a master by the Circuit Court to ascertain and report the extent, validity, and effect of the liens upon and titles to the property not covered by the mortgage, if any, which have inured to the defendant, Crocker, by virtue of the purchase of the three liens that have been discussed and the amounts expended by the defendant in procuring and protecting these titles and the property to which they attach. Upon the filing of this report a decree should be rendered in favor of the complainant of the character heretofore indicated. The decree below is accordingly reversed, and the case is remanded to the Circuit Court, with directions to take further proceedings in accordance with the views expressed in this opinion.

HOOK, Circuit Judge, concurs in the result.

(132 Fed. 12.)

RAPHAEL v. RIO GRANDE WESTERN RY. CO. et al.

(Circuit Court of Appeals, Eighth Circuit. July 28, 1904.)

No. 1,824.

1. EQUITY—RIGHT TO IMPEACH FORECLOSURE SALE OF RAILROAD—LACHES.

One who purchased second mortgage bonds of a railroad company, for a merely nominal price, 18 years after a first mortgage had been foreclosed and the property sold in proceedings which were public, and without fraud, and who made no inquiries, although the unpaid interest coupons were attached to many of the bonds, and all the facts could have been readily

Digitized by Google

ascertained, has no standing in equity as an innocent purchaser to impeach the validity of the foreclosure sale on the ground of technical irregularities as against a new company which had purchased the property, improved it at large expense, and had included it in a mortgage securing bonds of its own issue.

Appeal from the Circuit Court of the United States for the District of Utah.

In 1873 the Wasatch & Jordan Valley Railroad Company, a corporation of the territory of Utah, mortgaged its property and franchises to secure an issue of its first mortgage bonds aggregating more than $300,000. In 1874 the Bingham Canyon & Camp Floyd Railroad Company, also a corporation of the territory of Utah, mortgaged its property and franchises to secure an issue of $300,000 of its first mortgage bonds. The railroads of these companies connected at Sandy Station, in Salt Lake county, Utah; that of the Wasatch Company extending eastward from that point about 15 miles, and that of the Bingham Company extending westward about 20 miles. In 1879 the two companies effected a consolidation, and the new or consolidated company assumed the name of the Wasatch & Jordan Valley Railroad Company. In the same year the new Wasatch Company executed to the Union Trust Company of New York, as trustee, a mortgage upon the railroads, property, and franchises which had theretofore belonged to its constituent companies, to secure an authorized issue of 1,200 bonds, each of the denomination of $1,000. This mortgage was subject to each of those above mentioned. Only 884 of these second mortgage bonds were ever certified and issued, and Nathaniel W. Raphael was the owner of 579 of them when he instituted this suit. In 1881 the trustees of the Bingham and old Wasatch underlying mortgages, by virtue of the powers expressed in those instruments, took possession of the two railroads, and, proceeding separately, advertised and sold them. It was alleged that each company had defaulted in the payment of the interest coupons attached to its bonds, and that conformably with the provisions of the respective mortgages the bonds themselves became due, and the duty of sale devolved upon the trustees. Deeds of conveyance were thereupon made by the trustees to the Denver & Rio Grande Western Railway Company. In 1889 the Rio Grande Western Railway Company succeeded the Denver & Rio Grande Western in the ownership and possession of the properties mentioned. In the same year it executed to the Central Trust Company of New York its first mortgage upon its property and franchises, including the two lines of railroad in question, to secure an issue of sixteen million dollars of bonds, and in 1899 it executed to the Morton Trust Company of New York (then known as the State Trust Company) another mortgage thereon to secure an issue of between twelve and thirteen million dollars. In 1899 Nathaniel W. Raphael purchased in New York 579 of the bonds of the new or consolidated Wasatch Company. The bonds purchased by Raphael aggregated in amount $579,000, and to most of them were attached 20 years of defaulted coupons. The Union Trust Company, the trustee in the mortgage given to secure these bonds, declined to bring suit at Raphael's request. Consequently, on January 7, 1901—nearly 20 years after the sales of the mortgaged properties by the trustees under the prior mortgages—Raphael exhibited his bill against the new Wasatch Company, the Rio Grande Western, and the Union Trust Company, as trustee, to annul the sales made in 1881 under the prior mortgages, to be allowed to redeem from those mortgages, for an accounting on the part of the Rio Grande Western of the rents and profits of the railroads, to foreclose the second mortgage securing his bonds, and for general relief. Upon their own application the Central Trust Company and the Morton Trust Company were subsequently made parties defendant. The gravamen of the bill is that the trustees' sales in 1881 were fraudulent, that the fraud was concealed, that the complainant was an innocent purchaser of the second mortgage bonds of the new Wasatch Company, and that he did not discover the fraud until July, 1899. The principal criticisms made of the trustees' sale of the railroad of the Bingham Company, which is the only branch of the case necessary to be considered, are a failure to publish the notice of sale in such a newspaper as the mortgage con-

Digitized by Google

templated; that there was no default in the interest on the Bingham bonds, and the bonds were therefore not due; that no demand was made six months before the sale was noticed; that the notice of sale contained no sufficient recital respecting the maturity of the bonds and the amount claimed to be due; that the Bingham Company had deposited the $300,000 of bonds as collateral for a note for $200,000, and that, as long as the interest on the note was paid, no interest was to be paid on the bonds; that the interest was paid on the note; that the holder of the note and the collateral bonds unlawfully sold the bonds, thus paying the debt of the company; that the purchaser of the bonds thereupon at once unlawfully and fraudulently caused the trustees to foreclose the mortgage by notice and sale; that the trustees who took possession of the road fraudulently failed to apply the net earnings to the payment of the interest on the bonds; that the original holder of the bonds never lawfully foreclosed the pledge thereof, and he could not, therefore, vest a good title in the person who caused the mortgage to be foreclosed; that the Rio Grande Western and its predecessor, the Denver & Rio Grande Western, acquired title to the Bingham road with knowledge of the fraud and invalidity of the foreclosure proceedings, and that consequently their position was that of mortgagees in possession. When the Bingham road was sold by the trustees in 1881 and was deeded to the Denver & Rio Grande Western in 1882, it became incorporated in and a part of the railroad system of the latter company. The trustees' deed of conveyance, which recited the cause of foreclosure and the various steps taken by them, was recorded in the public records in Utah in 1882, and imparted notice to the world of its recitals. The grantee took possession under the deed in 1882, and it and its successor have ever since remained in the open, notorious, exclusive, adverse and continuous occupancy thereof. Such occupancy was under claim and color of title, and was accompanied by the payment of taxes. The railroad was practically reconstructed by its new owners. It was changed from a narrow to a standard gauge. It became, with the remainder of the system of which it was a part, subject to mortgages securing many millions of dollars of bonds which passed into the hands of innocent purchasers. If the trustees' sale of 1881 should be sustained against complainant's attack, the lien of the second mortgage which was given to secure the bonds held by him is concededly cut off and foreclosed. The company which originally owned the Bingham road, its officers and stockholders, the trustee of the second mortgage, and also the holders of the second mortgage bonds, all acquiesced for 18 years in the trustees' sale which cut off their rights and interests. If they were not fully informed of the proceedings connected with the foreclosure and sale by the trustees, they were intentionally ignorant. In 1899 the complainant, who was a lawyer, and a broker in defaulted securities, purchased 579 of these second mortgage bonds. They were of the face value of $579,000. To most of them there remained still attached all of the original interest coupons, those in default covering a period of 20 years. The bonds and matured coupons purchased by him amounted to more than $1,000,000. He paid for them less than $1,000. The prices paid by him varied from $1 to $1.85 per $1,000 bond with attached coupons. On $355,000 of the bonds the trustee's certificate was canceled when he bought them. He did not, before purchasing, seek to ascertain why this important evidence of genuineness, validity, and value was destroyed. An important participant in that which complainant afterwards denominated a fraud was one of the trustees who sold the Bingham road in 1881. Nevertheless complainant utilized his services in locating a portion of the bonds which he purchased. This same man had been the president of the new Wasatch Company, whose defaulted securities the complainant was gathering up, and his name appeared as such upon every bond. But complainant carefully avoided making inquiries which would have led to information. Before purchasing any of the defaulted bonds he examined some issues of a railroad manual including the one for the year 1882, and he read what appeared there concerning the affairs of the company which issued the bonds. In the publication of the year mentioned it was recited that the railroad was "recently purchased by the Denver & Rio Grande Western Railway Company." But he made no inquiry of that company as to the status of the securities which he contemplated purchasing; nor did he inquire of the Union Trust Company of New York, the trustee for

Digitized by Google

the holders of those securities—the trustee which had canceled its certificate upon $355,000 of bonds which he purchased. There were other obvious sources of information to one who desired to be informed, but they were purposely ignored by the complainant. When he had about completed his purchases, he became apprehensive that 18 years prior thereto a fraud had been committed upon the company and the original holders of the second mortgage bonds which he had just purchased for a nominal consideration. He claimed that thereupon, as an innocent purchaser, he made an investigation, and discovered for the first time the commission of a fraud, and its prior concealment. Failing to induce the Rio Grande Western to purchase his bonds and coupons, he instituted suit on January 7, 1901, nearly 20 years after the trustees' sale complained of. At the trial the complainant wholly failed to establish fraud either in the trustees' sale and conveyance of the Bingham road or in any of the acts of the parties or the proceedings of the trustees leading up to the same. Nor did there appear to have been the slightest concealment of what was actually done. After full hearing the Circuit Court dismissed the bill. The complainant died after perfecting his appeal to this court, and Martha Raphael, as administratrix of his estate, was substituted as appellant. The appellant's contentions in this court have been confined to the proceedings connected with the sale of the Bingham road, the other branch of the case having been abandoned.

Charles Locke Easton and F. W. Lehmann, for appellant.

Edward M. Shepard (Robert Harkness, William Mason Smith, and Adrian H. Joline, on the brief), for appellees.

Before SANBORN and HOOK, Circuit Judges.

HOOK, Circuit Judge, after stating the case as above, delivered the opinion of the court.

There was no fraud in the sale of the railroad under the first mortgage. There was no concealment of what was done. All of the acts of the parties were characterized by that measure of openness and publicity which customarily marks the conduct of such affairs. Every one interested in or affected by the sale remained acquiescent for 18 years. In the meantime the rights of other parties attached, and extensive improvements were made on the property. Then came the complainant as a speculator in discarded opportunities for litigation. He purchased more than $1,000,000 of defaulted second mortgage securities for less than $1,000, and while doing so he turned his back to sources of information which thrust themselves upon his notice. His purchases made, he then investigated for fraud and technical defects in the proceedings resulting in the foreclosure of the first mortgage. Having failed to induce the present owner of the railroad, which rebuilt and improved it and made it valuable, to purchase peace and immunity from litigation, he sought, as an innocent purchaser, the aid of a court of chancery nearly 20 years after the making of the sale which he attacked. Even were the proceedings technically defective—a question which we do not find it necessary to consider—the right to challenge them was long since barred by the Utah statute of limitations. But, aside from the statute, the case of complainant is wholly devoid of equity. Those requirements of Lord Camden which have been so often approved and applied—conscience, good faith, and reasonable diligence—are wholly absent. The stability of property rights and the peace and repose of society are conserved by the prompt assertion of grievances. Delay for many years beyond the statutory period of limitation,

Digitized by Google

changes in value and condition, and the intervention of the rights of innocent third parties forbid their disturbance. It is obvious that the proper disposition of this appeal needs only the application of those principles of justice and equity to which all will assent without the citation of precedent or authority.

The decree of the Circuit Court will be affirmed.

(132 Fed. 16.)

AMERICAN TUBE WORKS v. BRIDGEWATER IRON CO.

(Circuit Court of Appeals, First Circuit. August 25, 1904.)

No. 523.

1. APPEAL—ISSUES REVIEWABLE.

Where a decree dismissing a bill is general, all defenses pleaded are open to the defendant on appeal, although one only may have been sustained by the trial court in its opinion.

2. PATENTS—ANTICIPATION—CONSTRUCTION OF CLAIMS.

The Adams patent, No. 24,915, for "a tube or cylinder cast out of copper, and free from blowholes and other similar defects, when produced as herein stated," covered a product only, and not the process, and was void for anticipation, it being shown that other processes previously in use also produced sound copper tubes, although not so large a percentage as that described in the patent.

3. SAME—SUIT FOR INFRINGEMENT—LACHES.

Where a patentee, who had contracted to obtain an extension of his patent, if possible, and to assign the same to plaintiff, made a compromise agreement with defendant, which was opposing the extension, by which the opposition was withdrawn, and defendant was to have a license to use the patented device, plaintiff, with knowledge of the agreement made for its benefit, was bound thereby, and in any event was barred by laches from maintaining a suit in equity for infringement against defendant commenced within less than a month before the extended patent expired, and more than three years after it had full knowledge of all the facts, during which time it made no claim of infringement.

Appeal from the Circuit Court of the United States for the District of Massachusetts.

For opinion below, see 124 Fed. 782.

George L. Roberts and George Wm. Estabrook, for appellant.

Robert F. Herrick and Richardson, Herrick & Neave, for appellee.

Before HOLMES, Circuit Justice, PUTNAM, Circuit Judge, and ALDRICH, District Judge.

HOLMES, Circuit Justice. This is a bill in equity alleging an infringement of a patent for cast copper tubes, granted to Freeborn Adams on August 2, 1859, and extended for seven years from August 2, 1873, the extended patent having been assigned to the plaintiff. The bill prays for a permanent injunction and an account covering the extended term. The Circuit Court made an interlocutory decree in favor of the plaintiff, the case was referred to a master and a

¶ 2. Laches as a defense in suits for infringement of patents, see notes to Taylor v. Sawyer Spindle Co., 22 C. C. A. 211; Richardson v. D. M. Osborne & Co., 36 C. C. A. 613.

Digitized by Google

careful report was made. Upon facts discovered at the hearing and now appearing in that report, the defendant filed a supplemental bill, in the nature of a bill of review, setting up that an alleged license from Adams, which had been relied on in the answer, was granted with the privity of the plaintiff. The Circuit Court agreed with the master that the facts established this defence and entered a decree dismissing the bill, whereupon the plaintiff appealed to this court. The decree was general and therefore all defences are open here.

The question is raised in the first place whether the bill was not filed too late. It was filed on July 10, 1880, and the patent expired on August 2 of the same year. We shall assume, merely for purposes of decision, that the bill may be maintained as against that objection, because we are clearly of opinion, not only that the defence sustained by the Circuit Court is good, but also that the patent in the form in which it was taken out was invalid.

The patent to Adams stated its claim thus: What I do claim (as a new article of manufacture) is a tube or cylinder cast out of copper and free from blow holes and other similar defects when produced as herein stated." We assume that Adams had invented a new and valuable process, which it is unnecessary to describe, but by which he produced a much larger percentage of sound copper tubes than it had been possible to produce before. But he took his patent for the product, and he must stand upon his claim as it was made. Cast copper cylinders free from blow holes, when produced as stated in Adams's specification, were not different from perfect copper cylinders produced by casting in any other way. Therefore it was admitted at the argument that, whatever might be necessary to constitute in infringement of Adams's patent, that patent was anticipated if cast copper cylinders free from blow holes were known and could be produced before. Cochrane v. Badische Anilin & Soda Fabrik, 111 U. S. 293, 311, 4 Sup. Ct. 455, 28 L. Ed. 433.

Patents were put in by the defendant, which described methods of casting copper cylinders which the patents alleged would be perfectly sound, although the plaintiff objects that the boasts of the patents are not evidence of their own truth and that the experiments made contradict them. There was evidence on the defendant's side, also, but we do not stop to weigh it. It is enough that the plaintiff admits, what its own witnesses say, that in experimenting with the mode of casting known before Adams's invention, it had produced perfect tubes. The testimony is not that none were made, but that the percentage of good tubes was so small that they considered the trials before Adams's success a failure. This testimony is all that the defendant needs. At the argument these occasional successes were likened to a chemical by-product which is found in the course of making something else, which is produced accidentally, no one knows how, which passes unnoticed, and which cannot be reproduced at will. But the distinction, whether it be of degree or of kind, is plain enough. The tubes referred to were produced by a method which was followed for the purpose of producing them and which, it fairly may be presumed, would produce them once in so often in the future

Digitized by Google

as it had produced them in the past. Why the attempt succeeded when it did succeed was not known. But even now it is not known with certainty why Adams's rotating moulds succeed, as they more often do. The difference between the old methods and the new is simply in the proportion between failure and success,—the best of distinctions if the process were in question, but inadequate to justify a patent for the product.

We pass now to the other defence which we have mentioned. When Adams applied for an extension of his patent in 1873, the defendant filed reasons in opposition. Thereupon a compromise was made on June 16, 1873, between Adams and the defendant, by which the defendant was to withdraw its opposition to the renewal, and, on the other hand, it was agreed that any process of manufacturing copper tubes then used by the defendant was not an infringement of Adams's patent. There was some argument as to the construction of this instrument, but it seems to us plain that the words were not confined to infringements in the past. Of course, therefore, if this agreement was made on behalf of the plaintiff as well as Adams, or if the making of it was known and assented to by the plaintiff, whether the agreement was lawful or not, the continued use of its own processes by the defendant with the consent of all parties interested could not be complained of now.

The defendant used no other processes than those referred to in the compromise, but it used those, and the plaintiff knew what it was doing, at least as early as March 30, 1877; yet the defendant never heard a word of protest from the plaintiff and the plaintiff made no public claim, although in keen competition with the defendant, until this bill was filed, just before the patent expired. On December 8, 1869, long before the compromise was made, Adams had made an agreement with the plaintiff, covenanting to apply for an extension of his patents and to make all efforts in his power to accomplish the same, and upon obtaining it, to assign it to the American Tube Works by a sufficient assignment, the Tube Works bearing the expense of the proceedings. There was also a covenant to pay five thousand dollars as liquidated damages in case of breach. Thus Adams had no interest in the matter except to save himself from liability. The plaintiff was the party to profit by the withdrawal of opposition. Evidently it knew of the withdrawal, because after the compromise the only notice of the taking of testimony which it gave to the defendant was given on the day when the testimony was taken. This fact, coupled with the acceptance of service by the defendant, showed some kind of concert or understanding between the parties.

The probability that the plaintiff at least knew what was being done is increased by the fact that its counsel acted for Adams, and it is made certain by a letter from Buckingham, the plaintiff's president, dated April 16, 1877, in which, after quoting the plaintiff's present counsel for the difficulties in the way of the Adams patent which we have stated, he says: "Perhaps all we can go for is the ¾ c. they promised to pay." This clearly refers to a stipulation in the Adams compromise, and the word "the" refers to it as something assumed to be known. We may mention also another letter of April 18, 1877,

Digitized by Google

from an employé of the company to its treasurer saying: "I find I am acquainted with R. K. Evans here, one of the lawyers who argued our case when applying for the extension." This brief recapitulation of the reasons which convinced the master and the Circuit Court seems to us unshaken by anything that was said before us. It would show inexcusable laches after April 16, 1877, even if it did not prove the plaintiff's consent to what the defendant did.

It was much pressed that more probably the compromise was a fraud concocted between Nahum Stetson, the defendant's president, and Adams. Why, otherwise, it was asked, was the defence not put forward until sixteen years after the bill was filed, when Stetson and Adams both were dead? The defendant had notice of the agreement of 1869 between Adams and the plaintiff when the bill was filed. But the difficulty raised by the omission appears to us by no means equal to the difficulties on the other side. Both parties seem to have been playing a pretty sharp game and to have had some reasons for keeping their relations shadowy. The plaintiff, so far as it adopted Adams's steps to procure an extension, was not very far from fraud, and also naturally would not put forward facts suggesting a doubt whether the extension should have been granted. The defendant was setting up a legal right under its license from Adams as against what it considered the merely equitable rights of the plaintiff under Adams's covenant of December 8, 1869. We express no opinion whether the defendant ought to have prevailed on that ground, but the contention at least was plausible. Until it was overruled by the Circuit Court, of course the defendant did not wish to charge itself with notice of the plaintiff's interest. If the defendant had sacrificed the defence which it was making and had relied upon the matter of the supplemental bill, it would have been unable to prove the plaintiff's knowledge otherwise than by inference until it discovered the Buckingham letter in the course of the trial. Apart from the greater difficulties on the other side, we see no sufficient reason to suspect a conspiracy between Stetson and Adams.

Some further argument was made from the contents of Buckingham's letter, that he could not have known the whole agreement of compromise. It is sufficient to say with regard to them that they seem to us to show nothing more than the average inaccuracy of a layman speaking of legal matters in what is called by the plaintiff's counsel a gossiping, friendly letter, coupled with a slightly unscrupulous attitude toward the defendant. The possibility of adopting this attitude was one of the plaintiff's advantages from not taking a direct part in the compromise of June 16, 1873.

As we have hinted, there are other obstacles which the plaintiff would have to overcome before it could prevail, but we think the foregoing reasons are sufficient to warrant us in affirming the decree.

The decree of the Circuit Court dismissing the bill is affirmed, and the appellee recovers its costs of appeal.

Digitized by Google

(130 Fed. 702.)

EATON & PRINCE CO. v. WADSWORTH.

(Circuit Court of Appeals, Seventh Circuit. April 12, 1904.)

No. 1,041.

1. PATENTS—INVENTION—SAFETY-BRAKE FOR ELEVATORS.
The Eaton, Prince, and Livesey patent, No. 347,778, for a safety-brake for elevators, claim 6, is void for lack of invention.

Appeal from the Circuit Court of the United States for the Northern Division of the Northern District of Illinois.

For opinion below, see 125 Fed. 120.

Frank F. Brown, for appellant.

Thomas F. Sheridan, for appellee.

Before JENKINS, GROSSCUP, and BAKER, Circuit Judges.

BAKER, Circuit Judge. This is an appeal from a decree adjudging that there was no equity in appellant's bill for infringement of claim 6 of letters patent No. 347,778, August 24, 1886, to appellant's assignors. The claim is as follows:

"(6) In an elevator safety-brake, the combination, with an expansible ball-governor, of a trigger located relatively to the governor, substantially as shown, whereby said trigger is operated directly by contact therewith of the governor-balls, essentially as specified."

Small (No. 228,284, June 1, 1880) had shown, in an elevator safety-brake, the combination of an expansible ball-governor and a trigger that was operated by the centrifugal pull of the governor-balls through a sliding sleeve on the governor shaft. The only thought that appellant's assignors added to Small's disclosure was this: It would be an improvement to replace the continuous pull by repeated blows upon the trigger, for thus the braking-mechanism would more promptly and surely be put into action. In guarding against excessive speed of water wheels (Bahme, No. 61,381, January 22, 1867) and of steam engines (Ripp & Mueller, No. 226,553, April 13, 1880), the hammer-action of the balls of expansible ball-governors had been used to trip triggers. This sixth claim, therefore, is for the act of substituting in Small's elevator safety-brake the Ripp & Mueller hammer-action for Small's sliding sleeve as the means for actuating the trigger; and falls, we think, within the no-invention class, of which several examples from decisions of the Supreme Court were collated in Wisconsin Compressed Air House Cleaning Co. v. American Compressed Air Cleaning Co., 125 Fed. 761, 60 C. C. A. 529.

Appellant's contention that the Bahme and Ripp & Mueller references are too remote we deem not well founded. Claim 6 departs from Small only with respect to the action of the ball-governor upon the trigger, and any one who desired to make the change would naturally look to the "governor" art.

The decree is affirmed.

Digitized by Google

(132 Fed. 209.)

ALLEN et al. v. CITY OF DAVENPORT.

CITY OF DAVENPORT v. ALLEN et al.

(Circuit Court of Appeals, Eighth Circuit. July 23, 1904.)

Nos. 1,974, 1,990.

1. MUNICIPAL CORPORATIONS—SPECIAL ASSESSMENT FOR STREET IMPROVEMENT —JURISDICTION TO MAKE UNDER IOWA STATUTE.

Under Acts 25th Gen. Assem. Iowa, c. 7, p. 18, which applies to cities under special charter, and provides that all street improvements shall be made by contract, let to the lowest bidder, after advertising and secured by a bond from the contractor, a valid contract is a jurisdictional prerequisite to the exercise by the city of the power conferred to make a special assessment on abutting property of the cost of paving a street.

2. SAME—CURATIVE STATUTE.

Code Iowa 1873, §§ 478, 479, provide for suits by municipal corporations to enforce a lien upon abutting property for the cost of street improvements, and that "in any such proceeding, where the court trying the same shall be satisfied that the work has been done or materials furnished, which, according to the true intent of the act, would be properly chargeable upon the lot or land through or by which the street * * * may pass, a recovery shall be permitted, or a charge enforced, to the extent of the proper proportion of the value of the work or materials which would be chargeable on such lot or land, notwithstanding any informality, irregularity, or defect in any such municipal corporation or its officers." *Held*, that the purpose of such provision was to prevent property owners from taking advantage of technical defenses, when the evidence shows that the municipality has exercised its power in substantial conformity with law, but that it did not authorize recovery by a city for the cost of paving done under a contract which was wholly void, as beyond its constitutional power, and which, as had been adjudged by the Supreme Court of the state, created no obligation on its part, and conferred no authority upon it to make a special assessment against abutting property for the cost of the work done thereunder.

3. RES JUDICATA—MATTERS CONCLUDED BY JUDGMENT—DEFENSE NOT PLEADED.

After a city had let a contract for the paving of a street, owners of property abutting thereon commenced a suit to enjoin the work and the levying of any special assessment on their property therefor, alleging the invalidity of the contract. No preliminary injunction was issued, and the contractor proceeded to do the work, and the city paid for it, and made an assessment therefor against the plaintiff's property. It was finally determined in the suit by the Supreme Court of the state that the contract was wholly void, as beyond the constitutional powers of the city, and conferred no authority upon it to make the assessment, and in accordance with its mandate the enforcement of such assessment was enjoined by a final decree. *Held*, that the suit was, in effect, one to prevent a cloud being cast upon the title to plaintiffs' property by the anticipated assessment, and that the decree therein was a bar to a subsequent suit by the city to enforce a lien thereon against the property on a quantum meruit under a curative statute giving it such right, where an assessment was invalid because of defects or irregularities in the proceedings, since such right, if it existed, was a complete defense to the prior suit, and should have been pleaded therein.

Hook, Circuit Judge, dissenting.

¶ 2. Power of the Legislature to pass curative statutes, see note to Steele County v. Erskine, 39 C. C. A. 180.

Digitized by Google

Appeal from the Circuit Court of the United States for the Southern District of Iowa.

On December 9, 1901, the city of Davenport exhibited its bill of complaint against William Russell Allen, Elizabeth L. Donaldson, Thomas Allen, George W. Allen, Annie L. A. Chauvenet, Alice N. A. Atwater, and Annie Russell Allen, who are the appellants in case No. 1,974, in the district court of Scott county, state of Iowa. For convenience the city of Davenport will hereafter be termed the "plaintiff" and the appellants in case No. 1,974 will be termed the "defendants." The case was subsequently removed to the Circuit Court of the United States for the Southern District of Iowa. The bill of complaint which was so filed by the city contained two counts. That count on which a recovery appears to have been allowed, charged, in substance, that on or about December 1, 1896, the city of Davenport graded, curbed, and paved a part of Eddy street and the Davenport and Le Claire Road, through lands belonging to the defendants, and furnished the labor and material for such improvement, and that the reasonable value of such labor and material and such improvement was the sum of $14,675.26, no part of which had been paid, although said sum was long past due; that the land so owned by the defendants through which a road had been graded, curbed, and paved was the northeast quarter and the southeast fractional quarter of section 30 in township 78 north, of range 4 east of the fifth principal meridian; that said improvement was authorized by law, and was such an improvement as was contemplated by the law under which the city acted, and that under said law the cost of said improvement became a lien on the lands abutting on said improvement to the extent of 150 feet on each side thereof from the time of the commencement of said improvement, and continued to be a lien until the same was paid; and that by said law the plaintiff was entitled to 10 per cent. interest on the cost of said improvement and collection fees for collecting the same. The city accordingly prayed judgment against the defendants, and each of them, for the sum of $21,890.61, with interest at the rate of 10 per cent. from January 2, 1902, and for costs, including 5 per cent. of the amount of said judgment, to defray the expense of collection; and that the amount of said judgment might be decreed to be a lien upon the property of the defendants above described abutting on Eddy street and the Davenport and Le Claire Road from the date of the completion of the work on December 2, 1896, until paid; also that a special execution might be issued for the sale of said premises, or so much thereof as was deemed necessary to satisfy said judgment, interest and costs.

The laws of the state of Iowa, which, as the city contends, authorized it to do the work in controversy, and on which it predicates its right to recover the cost of the work in this proceeding, are section 19 of article 7 of the charter of the city of Davenport, chapter 7, p. 18, of the Acts of the Twenty-Fifth General Assembly of the state of Iowa, which appears to have been approved on April 28, 1894, and sections 478 and 479 of the Code of Iowa for 1873, which latter sections are now found in McClain's Revised Code of Iowa of 1888, in volume 1, at pages 164, 165, §§ 649, 650.

Section 19 of the city charter confers authority to improve streets in the following language:

"The city council shall have power by ordinance to levy and collect a special tax on the owners of lots on any street, lane, avenue, alley or block or the side of a block fronting or lying on any alley or part of any street, lane, avenue or alley according to their respective fronts owned by them, for the purpose of paving or grading the sidewalks; grading, paving or macadamizing such streets, lanes, avenues and alleys or parts thereof and for lighting the same, on being petitioned so to do by the owners of more than one half the property so to be taxed."

Chapter 7, p. 18, of the Acts of the Twenty-Fifth General Assembly of the state of Iowa, so far as it is deemed essential to quote the provisions of that act, are as follows:

"Section 1. That all cities in this state organized and existing under special charter, and all cities having a population of 5,000 or over, shall have all the powers and be subject to the provisions of this act.

"Sec. 2. When the council of any such city shall direct the paving and curb-

Digitized by Google

ing of any street, or streets, or the construction of any sewers, such council, or the board of public works, in case such board shall exist, shall make and enter into contracts for furnishing labor and materials, and for the curbing, and paving the surface with any material, composition, patented or otherwise, or sewering, as the case may be, either for the entire work in one contract, or for parts thereof in separate and specified sections, as to them may seem best.

"Sec. 3. All such contracts shall be made by the council or the board of public works, when such board shall exist, and shall be made with the lowest bidder, or bidders, upon sealed proposals, after giving public notice thereof for not less than ten days in at least two newspapers of said city, which notice shall state as nearly as practicable the extent of the work, the kind of materials to be furnished, when the work shall be done, and at what time the proposals shall be acted upon.

"Sec. 4. Each contractor shall be required to give bond to the city, with sureties to be approved by the council, or by the board of public works, where such board shall exist, for the faithful performance of the contract, and the council or such board, shall have power to institute suit in the name of the city to enforce all such contracts."

Sections 478, 479, of the Code of Iowa of 1873, are as follows:

"478. Each municipal corporation may, by a general ordinance, prescribe the mode in which the charge on the respective owners of lots or lands, and on the lots or lands, shall be assessed and determined for the purposes authorized by this chapter; such charge, when assessed, shall be payable by the owner or owners at the time of the assessment personally, and shall also be a lien upon the respective lots or parcels of land from the time of the assessment. Such charge may be collected and such lien enforced by a proceeding in law or in equity, either in the name of such corporation, or of any person to whom it shall have directed payment to be made. In any such proceedings, where pleadings are required, it shall be sufficient to declare generally for work and labor done, and materials furnished on the particular street, alley or highway. Proceedings may be instituted against all the owners or any of them, to enforce the lien against all the lots or land, or each lot or parcel, or any number of them embraced in any one assessment, but the judgment or decree shall be rendered separately for the amount properly chargeable to each. Any proceedings may be severed, in the discretion of the court, for the purpose of trial, review or appeal.

"479. In any such proceeding, where the court trying the same shall be satisfied that the work has been done, or materials furnished, which, according to the true intent of the act, would be properly chargeable upon the lot or land through or by which the street, alley or highway improved, repaired or lighted, may pass, a recovery shall be permitted, or a charge enforced, to the extent of the proper proportion of the value of the work or materials which would be chargeable on such lot or land, notwithstanding any informality, irregularity, or defect in any such municipal corporation or any of its officers. But in such case the court may adjudge as to costs as may be deemed proper, and in cases where an assessment shall have been regularly made, and payment shall have been neglected or refused at the time when the same was required, any municipal corporation may be entitled to demand and recover, in addition to the amount assessed and interest thereon at ten per cent. from the time of the assessment, five per cent. to defray the expense of collection, which shall be included in any judgment or decree which may be rendered. The provisions and powers conferred in this chapter from section four hundred and sixty-five to section four hundred and seventy-nine, inclusive, shall apply to cities acting under special charters."

The record in the case discloses the following facts, which are not denied: On June 5, 1896, a resolution was adopted by the city council of the city of Davenport directing that Eddy street and the Davenport and Le Claire Road in said city, for a distance of 6,680 feet to the city limits, be curbed with a curb of cement; that the road be excavated and paved with a paving brick of the best quality; that the work be done according to plans and specifications for such improvement to be prepared by the board of public works; that the work be completed on or before November 1, 1896; that the board of public works publish a notice inviting sealed proposals for doing the work; that such

Digitized by Google

proposals be received up to June 30, 1896, and that the board of public works cause them to be opened at that time, and make such a report to the council in relation to the improvement as it deemed proper. Acting under this resolution, the city subsequently, on September 4, 1896, entered into a contract with the Flick & Johnson Construction Company for the improvement of the street as provided in the resolution. By the terms of this contract the city obligated itself to pay for the work in money, 75 per cent. of which was to be paid on monthly estimates as the work progressed and the remaining 25 per cent. of the cost within 30 days after the street was completed and accepted.

On September 12, 1896, the defendants in this action filed a bill of complaint in the district court of Scott county, Iowa, against the city of Davenport and the Flick & Johnson Construction Company, alleging, among other things, that the contract in question was void, for the reason that by its terms the city had assumed a liability in excess of the liability which it was authorized to incur under the Constitution of the state of Iowa, and praying that the construction company be enjoined from doing the work, and that the city be enjoined from attempting to assess against the defendants, or to collect from them, any part of the cost of the work. No injunction appears to have been awarded by the court to which this bill was addressed, and the work was proceeded with by the construction company, and completed on December 2, 1896. On February 3, 1897, before there had been a final hearing or decree on the aforesaid bill, the cost of the work that had been done was levied and assessed as a special tax against the property of the defendants, the assessment being at the rate of $2.35 per front foot, or in the aggregate the sum of $14,675.26. When this assessment was made, the defendants to this action filed a supplemental bill in the case which was then pending against the city, and, in addition to the relief prayed for in their original bill, asked that the city be enjoined from attempting to enforce the assessment that had then been made against their property, on the ground that the assessment was void. The case which was thus brought by the defendants in this action against the city and the Flick & Johnson Construction Company came on for trial before the district court of Scott county, Iowa, and a decree was entered by that court dismissing their complaint on March 1, 1897. From this decree the defendants appealed to the Supreme Court of the state of Iowa. On December 17, 1898, the Supreme Court handed down a decision on the appeal, by which it reversed the decree of the lower court, holding that the contract which was entered into between the city of Davenport and the Flick & Johnson Construction Company was void for the reason that by entering into that contract the city incurred an indebtedness in excess of what it could lawfully incur under the Constitution of the state of Iowa. It also held that the assessment levied by the city on February 3, 1897, to procure funds with which to reimburse itself for the cost of the work which it had at that time paid was also invalid, and that the lower court should have so adjudged. Allen v. City of Davenport, 107 Iowa, 90, 111, 77 N. W. 532. On the return of the case to the lower court the city obtained leave to file an amendment to its answer. By the amendment the city set up, by way of counterclaim, practically the same cause of action which is stated in the case at bar; that is to say, it asserted a right to recover from the defendants the reasonable cost of the construction of the road through their property in virtue of the provisions of law hereinbefore quoted, notwithstanding the fact that the contract under which the work was done as well as the assessment that had been made had been adjudged to be invalid and void by the Supreme Court of the state. The defendants thereupon filed a motion to expunge the counterclaim, and have a decree entered in conformity with the mandate of the Supreme Court. The lower court overruled this motion, declining to strike out the counterclaim. A second appeal was thereupon taken to the Supreme Court of Iowa, which court again reversed the decision of the lower court, holding that the lower court had erred in permitting the amendment. Vide Allen v. City of Davenport (Iowa), 87 N. W. 743. After the announcement of the decision on the second appeal, and on January 14, 1902, the lower court entered a final decree in favor of these defendants, wherein it was adjudged, among other things, that the contract which was entered into between the city of Davenport and the Flick & Johnson Construction Company in June, 1896, for the

Digitized by Google

construction of the road in question, was null and void; that the assessment subsequently made against the defendants on February 3, 1897, in the sum of $14,675.26, as their proportion of the cost of constructing the road, was likewise null and void, and that the city be perpetually enjoined and restrained from proceeding to collect the assessment levied against the defendants for the doing of the work, and that it be enjoined from selling the defendants' land, or any part of it, under or by virtue of said assessment, to pay the cost of the improvement; also that the city be enjoined from paying the principal of any bonds that had been theretofore issued by the city to obtain the means wherewith to pay the cost of the improvement.

The present action appears to have been brought about a month previous to the rendition of the final decree last mentioned, but subsequent to the announcement of the decision of the Supreme Court of Iowa on the second appeal.

On the trial of the case at bar in the Circuit Court of the United States for the Southern District of Iowa that court granted the relief prayed for by the city; that is to say, it adjudged that the city have and recover from the defendants the sum of $14,675.26, with 6 per cent. interest thereon from February 3, 1897, when the city made its assessment, and that the sum aforesaid, together with the accrued interest, constituted a lien on the defendants' property, which lien should relate back to September 1, 1896, and that the defendants' property, or a certain part of it, be sold to satisfy the amount of the debt and accrued interest if it was not paid within 30 days. Both parties have appealed from this decree, the defendants below on grounds which will sufficiently appear in the opinion. The city prosecutes an appeal because it was denied interest at the rate of 10 per cent., which it claims should have been allowed in place of 6 per cent., and because the lower court refused to allow the city the sum of 5 per cent. on the amount of the judgment to defray the expense of collection.

F. N. Judson, Albert Arnstein, and Hamilton Grover (W. M. Chamberlain, on the brief), for Allen et al.

C. M. Waterman, E. M. Sharon, and Henry Thuenen, Jr., for city of Davenport.

Before SANBORN, THAYER, and HOOK, Circuit Judges.

THAYER, Circuit Judge, after stating the case as above, delivered the opinion of the court.

The appellants—that is to say, William Russell Allen and others—who will be hereafter termed the "defendants," contend that the city of Davenport was not entitled to a decree charging their property, as it was charged, with a lien for the cost of paving and curbing the street in controversy, because it was adjudged by the Supreme Court of Iowa in the suit brought by them against the city to enjoin the prosecution of the work that it was done under color of a contract which the city had no power to make; also because it was adjudged in the same case that the contract under which the street was improved would not support an assessment against the defendants' property for the cost of the work, and that the assessment which was in fact made on February 3, 1897, was utterly void, and of no effect. It is a fact which cannot be gainsaid that the Supreme Court of Iowa did hold that the contract between the city and the Flick & Johnson Construction Company was so utterly void that it did not impose a liability upon the city to pay the cost of the improvement which it had attempted to authorize, and that, in view of the invalidity of the contract, the city was powerless to levy an assessment against abutting property owners to reimburse itself for the cost of the work. In the

Digitized by Google

present proceeding, therefore, the city is in the attitude of seeking to compel the defendants to refund a sum of money which it has expended, but was under no legal obligation to expend. The theory of the city seems to be that, although the work was done under a void contract, which did not impose a liability on the city to pay for it, yet, as the doing of the work was probably beneficial to the defendants, and may have enhanced the value of their property to some extent, they may be compelled, in what is practically an action of assumpsit, to pay its reasonable value. This is tantamount to saying that a property owner in a city may be compelled to pay the cost of any street improvement which the city sees fit to make, to the extent that he is benefited thereby, irrespective of the question whether the municipality has pursued the forms of law and exercised its power to make the improvement in the prescribed way. Indeed, as we understand counsel for the city, it is broadly claimed that by virtue of sections 478 and 479 of the Iowa Code of 1873 (quoted above in the statement) a recovery may be had or a charge enforced against a property owner for a street improvement notwithstanding any failure on the part of the municipality to observe the forms of law in the exercise of its charter powers, and that to warrant a recovery in such cases the court need only be satisfied that the work has been done or materials furnished for a street improvement which would have been chargeable against the property owner if the municipality had exercised its powers in the right way. We have not been able to conclude that this is a reasonable construction of the two sections of the Iowa Code, or a construction which has been definitely approved by the courts of that state. It is obvious that, if it be the true construction of the two sections of the Code in question, then municipalities in the state of Iowa, in the matter of making street improvements, have been freed from all restraints that are imposed by their charters for the protection of property owners. According to the view contended for, if a municipality has a general power to grade and pave streets it may ignore any provision regulating the exercise of the power which it sees fit to ignore, since its failure to act in the prescribed way will be deemed merely an informality, or an irregularity, or a defect in procedure, which in no wise relieves property owners of their liability to pay the cost of the improvement. We naturally shrink from a construction of the statute which entails such consequences; nor do we think that there is anything in the language of the statute which requires such a construction. Section 478 deals in part with matters of practice. It aims to simplify proceedings in suits to enforce assessments for street improvements by providing that it "shall be sufficient to declare generally for work and labor done" without pleading in detail all the antecedent action that has been taken by the municipality to create the charge. This provision, however, that it shall be sufficient to declare for work and labor done cannot be understood as absolving the pleader from the obligation to prove on the trial that the municipality has in fact taken substantially all the steps which the law requires it to take to create a valid charge against the owners of abutting property. The statute deals with the subject of pleading, and, while it abbreviates the complaint in this class of cases, it does not lessen the measure of proof that is necessary to estab-

Digitized by Google

lish a liability. Section 479 appears to have been enacted to prevent property owners from taking advantage of defenses that are purely technical in suits brought against them to enforce assessments for street improvements, when the evidence shows that the power to make such improvements has been exercised by the municipality in substantial conformity with law. The Legislature foresaw that, when a municipality undertook to exercise its power to improve streets at the expense of abutting property owners, it might happen that the municipality, through ove. sight, would neglect to do every act in the precise form prescribed by its charter and ordinances, or to do it in the regular way, or at the right moment, and that there might be some defect of this nature in the course of procedure which would be in no wise prejudicial to the property owner. It accordingly declared that mere informalities or defects in the course of procedure where the municipality had exercised its powers in substantial conformity with law should not serve to prevent the enforcement of a charge against abutting property for its proportion of the cost of the improvement. Remedial legislation of this character, which is intended to deprive a taxpayer of technical defenses grounded on the fact that everything has not been done in the right form or in the prescribed order, although there has been a substantial compliance with the law, is quite common, and also very wholesome. But laws of this character should not be so interpreted as to deprive the property owner of his right to insist that his property shall not be charged with the cost of improving streets and making other improvements, unless there has been a substantial compliance with those provisions of the law that were enacted for his benefit and for his protection. It is an elementary doctrine that municipalities have no power to impose burdens on property for street and other local improvements unless the power to impose such burdens has been expressly conferred upon them by the Legislature. It is an exercise of the power of taxation, and this power belongs to the state, and is one of the highest attributes of sovereignty. When, therefore, the power is delegated to a municipal corporation, and laws are enacted prescribing the purposes for which it may be used, and the mode and manner of its exercise, these provisions of the law are mandatory, and should be carefully observed. French v. Edwards, 13 Wall. 506, 20 L. Ed. 702; Lyon v. Alley, 130 U. S. 177, 9 Sup. Ct. 480, 32 L. Ed. 899; Hager v. City of Burlington, 42 Iowa, 661; Warren v. Mayor, etc., of the City of Boston (Mass.) 62 N. E. 951; McCoy v. Briant, 53 Cal. 247; 2 Smith's Modern Law of Municipal Corporations, § 1242; Cooley on Taxation, page 656. A municipality cannot enforce a charge against the property of one of its citizens for local improvements unless it is able to show that it has proceeded according to law by taking substantially all of the initial steps which the law prescribes as necessary to create the charge. If it fails to do something which the law intended to be done for the protection of the citizen, and to prevent the imposition of an undue burden upon his property, an omission of this sort ought not to be looked upon as a mere informality or irregularity in the course of procedure, but should rather be regarded as a failure to do some necessary act which rendered its subsequent acts invalid and the charge unenforceable.

Digitized by Google

It is obvious, we think, that the city of Davenport had no power to assess a special tax against the property of these defendants for the improvement of the street or road which it resolved to improve, unless the work in question was done in pursuance of a contract. Sections 2 and 3 of chapter 7 of the Acts of the Twenty-Fifth General Assembly, supra, under which the city seems to have proceeded, expressly require that such work shall be done by contract, to be let to the lowest bidder after due notice. A general ordinance of the city that was in force when the work in question was undertaken contained provisions to the same effect, namely, that such work should "be done according to plans and specifications approved by the council under contract," and that a notice should be published for not less than 10 days inviting proposals for doing the work. Moreover, the city itself proceeded on the theory that such work could only be done in pursuance of a contract, and it accordingly invited proposals, and entered into a contract for the doing of the work with the Flick & Johnson Construction Company. This contract, however, was one in excess of the power of the city to either make or perform, and the attention of the city and the contractor was immediately called to the fact of its invalidity before any of the work was done. The city saw fit to ignore the suggestion that the contract was void. It proceeded with the work, and paid for it, and now calls upon the defendants for reimbursement; its claim being, apparently, that, while the contract was utterly void as between itself and the contractor, it was nevertheless valid in so far as the defendants are concerned, or at least that they should not be permitted to take advantage of its invalidity.

We have not been able to adopt that view of the case. The contract in question, whereby the city assumed an obligation to pay the entire cost of the work, and to pay it in money, was made in open violation of the Constitution of the state of Iowa, as the Supreme Court of that state has held (vide Allen v. City of Davenport, 107 Iowa, 90, 77 N. W. 532). The contract, being in excess of the power of the city, was not merely voidable, but absolutely void, creating no obligation that could be enforced as against either of the contracting parties. Central Transportation Co. v. Pullman Palace Car Co., 139 U. S. 24, 48, 59, 11 Sup. Ct. 478, 35 L. Ed. 55; California Bank v. Kennedy, 167 U. S. 362, 367, 17 Sup. Ct. 831, 42 L. Ed. 198; De La Vergne Co. v. German Savings Institution, 175 U. S. 40, 59, 20 Sup. Ct. 20, 44 L. Ed. 65. A void contract is in fact no contract, since an instrument of that nature does not alter the relations previously existing between the contracting parties, nor will it serve as the foundation of any right. When such a void agreement is signed, the situation of the parties thereto remains the same as before it was executed. Now, it must be assumed, we think, that when the act to which we have heretofore referred declares that when a city resolves to improve one of its streets it shall enter into a contract for the doing of the work as a condition precedent to making the cost of the work a charge upon abutting property, it means a valid contract; that is to say, one which the

Digitized by Google

city can enforce, if need be, both for its own protection and for the protection of property owners. Persons whose property is liable to be charged for the cost of a street improvement have as much interest in the contract under which the work is done as the city itself, and the right to insist that it shall be entered into in such manner that it may be enforced against the contractor. We fail to perceive, therefore, how the mere signing of an agreement, which, as between the contracting parties, was utterly void, can be accepted as a sufficient compliance with the provisions of the statute that the work of improving streets must be done by contract or how such an agreement can serve as the foundation of a charge against the defendants' property, when it failed to create any rights as against the city.

In behalf of the city it is contended, however, that the Supreme Court of Iowa has taken a different view of this question, and has held that in virtue of section 479 of the Code of Iowa of 1873 a charge against abutting property for street improvements may be enforced although the proceedings taken to create the charge disclosed as grave defects as the proceedings in the case at bar. The decisions to which our attention has been particularly invited, and on which the lower court seems to have relied, are the following: City of Burlington v. Quick et al., 47 Iowa, 222; Dittoe v. City of Davenport, 74 Iowa, 66, 36 N. W. 895; City of Muscatine v. Chicago, Rock Island & Pacific Ry. Co., 79 Iowa, 645, 44 N. W. 909; Tuttle v. Polk & Hubbell, 92 Iowa, 433, 60 N. W. 733; Ottumwa B. & C. Co. v. Ainley, 109 Iowa, 386, 80 N. W. 510; City of Chariton v. Holliday, 60 Iowa, 391, 14 N. W. 775; Fort Dodge Elec. Light & Power Co. v. City of Fort Dodge (Iowa) 89 N. W. 7.

In the first of these cases—City of Burlington v. Quick—it appears that the city council had ordered the improvement of a street and the levy of a special tax upon abutting property owners, and had directed the auditor of the city to ascertain the amount of such tax by dividing the whole expense by the number of front feet abutting the improvement, the result to be the assessment upon each front foot of property. It was claimed in that case, as it seems, that by an ordinance of the city the council was required to levy and assess the tax, and that the assessment was invalid because it had been made by the auditor instead of the council. It was held, however, that the duty performed by the auditor in the matter of apportioning the tax was merely clerical, and that, as the council had ordered both the levy and the assessment, and had directed the auditor how to apportion it, and as the apportionment had also been made in accordance with the provisions of a general ordinance on the subject, the assessment was in fact made by the council, and that the property owner had no right to complain.

The case of Dittoe v. City of Davenport was one in which the plaintiff had paid a tax for the construction of a sewer under protest, and brought an action against the city to recover the sum paid. He claimed that the charge which he had paid was illegal, for the reason that the resolution of the city council assessing it did not definitely describe the sewer, nor fix the gross amount of

Digitized by Google

the cost of the sewer, nor the amount per square foot to be assessed against adjacent property, as it should have done. He also claimed that no notice of the assessment had been given, and that he had had no opportunity to be heard in regard thereto. It appeared, however, that the street through which the sewer was to be constructed and its terminal points were described in the resolution; that the resolution assessing the tax also directed that it be assessed and levied on each lot, part of lot, or tract of ground in the sum and to the amounts shown by the plat of the city engineer; and it was admitted that this plat, to which reference was made, showed the amount to be assessed per square foot, the number of square feet in each tract, and the total assessment as respects each tract subject to be assessed for the sewer. It was accordingly held that the resolution of the council, in effect, adopted so much of the plat of the engineer as was referred to therein, and thereby furnished the means of obtaining precise knowledge of the amount of the tax assessed against each tract of land and each individual, and the total cost of the sewer, and that this was a substantial compliance with the law, and a sufficient compliance to sustain the validity of the charge. With reference to the other objection—that the taxpayer had been given no opportunity to be heard with reference to the assessment—the court said, in substance, that by demurring to the answer which was filed by the city, the plaintiff had admitted facts showing that the cost of the sewer had been assessed in all respects in conformity with law against each tract of land; that it appeared also that, if the plaintiff had been given an opportunity to be heard, it would have been of no advantage to him; and that the defect in the proceedings of which he complained did not affect the substantial merits of the case, nor entitle him to recover from the city the amount of the assessment which he had already paid.

In the case of Ottumwa B. & C. Co. v. Ainley, which was a proceeding to enforce a tax for a street improvement, it appeared that the city had advertised for proposals for the doing of the work, and had specified therein that the contractor should accept certificates to be issued by the city in full payment for the work and labor done in making the improvement. Only one bid for the doing of the work was received, and in this bid the contractor had inserted a provision that the city should guaranty the payment of a certificate which it was to issue against certain property lying on the west side of the street. The bid containing this provision was accepted by the city. It was claimed by the taxpayer that, inasmuch as the bid which was accepted by the city contained the aforesaid provision, and the same was in conflict with the terms of the resolution inviting proposals, the contract under which the work had been done was void, and that assessments subsequently made against abutting property could not be enforced. It appeared on the trial that the property lying on the west side of the street, with respect to which the city had guarantied the payment of the certificate which might be issued against it, was property which lay below ordinary high-water mark on the bank of a river, and there-

Digitized by Google

fore belonged to the state; that the city could not charge such property with a lien for the street improvement, but was itself responsible for the assessment against such property; that, in the absence of an express guaranty with respect to the charge against that property, the city would have been liable therefor as upon an implied guaranty and that for these reasons the acceptance of the contractor's bid with the provision contained therein with reference to a guaranty by the city did not affect the legality of the contract. The court further said that without the city's guaranty the cost of paving in front of the property in question would have been apportioned against other real property abutting on the improvement; that is to say, that the cost to other property owners would have been increased by the amount necessary to make the improvement in front of the tract in question; that there was nothing in the law to prevent a city, whose finances would admit of its so doing, from paying for an improvement like the one in question out of its general funds; and that at most all the case disclosed was a mere irregularity in the course of the proceedings which was not jurisdictional, but might be disregarded under section 479 of the Code of 1873. It is a notable fact that this case proceeds upon the assumption that, if the contract between the city and the contractor was in fact invalid, no charge for doing the work could be enforced against abutting property owners.

In the case of the City of Chariton v. Holliday, supra, it appeared that a general ordinance of the city, which was in force, provided the mode of assessing the cost of constructing sidewalks, and that a resolution had been adopted directing the building of a particular sidewalk, which resolution did not expressly provide the mode of assessment. It was held that the omission to prescribe the method of assessment in the resolution directing the construction of a particular sidewalk was a mere irregularity in view of the fact that a proper method of assessment was prescribed by the general ordinance, and that that method of assessment had been followed. In this case the Supreme Court of Iowa said, however, that "the irregularity or defect which, under this section (section 479 of the Code), can be disregarded, must, we think, be a mere error or omission to do something which in no manner affects the jurisdiction of the city."

The other cases to which our attention is directed contain no utterances, so far as we have been able to ascertain, that are pertinent to the case in hand. Considering the questions actually adjudicated in the cases to which we have referred, we are of opinion that they would not warrant us in holding that the city of Davenport, by virtue of the provisions contained in sections 478 and 479 of the Code of 1873, as construed by the Supreme Court of the state of Iowa, can enforce a charge against abutting property owners for a street improvement, where the work of improving a street is done under an utterly void contract. We feel constrained to hold that the making of a valid contract for the doing of such work is a jurisdictional prerequisite to the establishment of a charge against abutting property for the cost of the improvement. The laws of

Digitized by Google

the state, as well as the ordinances of the city to which we have already referred, clearly contemplate that such work shall always be done in pursuance of a contract, and no step in the course of the proceeding to charge abutting property owners with the cost of such work would seem to be more necessary for their protection.

The defendants further contend that, irrespective of other defenses, the decree which was rendered in the suit which they formerly brought against the city of Davenport to enjoin the prosecution of the work and the collection of the assessment of February 3, 1897, operates as a bar to this action. This leads us to inquire what issue or issues were involved in the former action. As we view the bill of complaint in that case, the defendants challenged the right of the city to charge the cost of the proposed improvement against them or their property upon any ground, provided the work was proceeded with under the contract that had been entered into with the Flick & Johnson Construction Company. They asserted not only that the contract with that company was one which the city had no power to make, and that it was on that account void, but, as a corollary from his proposition, that, if the work was done under that contract, the doing of the work would not operate to create a lien against their property, or a personal liability against them. They accordingly prayed that the prosecution of the work might be enjoined to prevent the possible assertion of a lien against their property for its cost. The bill was in its essence one to prevent a cloud being cast on their title. On no other ground than that of avoiding a cloud upon the title to their property which might be created if the work was done as proposed were they entitled to seek relief in a court of equity. It is true that the contention in the former suit was principally with reference to the validity of the contract with the Flick & Johnson Construction Company, but the decision of that question was only important, so far as the defendants were concerned, in that it determined the other question in which they were vitally interested—whether, if the work was done under that contract, the cost thereof could be charged as a lien against their property. We feel constrained to hold, therefore, that the fundamental issue which was presented by the former action was whether the defendants' property could be charged with the cost of the improvement if the city proceeded with it in the proposed manner. This issue was decided in favor of the defendants and adversely to the city.

Such being the broad issue that was tendered by the bill in the former case, why is it not true that the decree which was rendered in that case is a bar to the present suit? Counsel for the city say that it did not urge in that case the right to recover the cost of the improvement in virtue of sections 478 and 479 of the Code of Iowa of 1873, and that its right of recovery under those sections is a question which remains open and undetermined. But if it be true, as now contended, that, notwithstanding the invalidity of the contract in question, the city was entitled to collect a proper proportion of the cost of the improvement out of the defendants' property, and to have it charged with a lien therefor because the defect in the contract was a mere informality or irregularity in matters of procedure, which might be ignored, why was it not the duty of the city to have pleaded that fact

Digitized by Google

as a defense against the relief sought in the former action? We think that, if the latter theory is sound, the city had a perfect defense to the former action, and should have pleaded it, for, if sections 478 and 479, supra, gave the city the right to collect out of the defendants' property its proper proportion of the cost of the work, although it was not done under a valid contract, then the defendants' bill contained no allegations entitling them to such equitable relief as was prayed for and afterwards granted, since the prosecution of the work would have created no cloud on their title of which they could well complain. No chancellor, we think, would have granted an injunction against the prosecution of the work if it had been made to appear that the action taken by the city had been so far in accordance with law that it would, in any event, be entitled to recover the cost of the work in virtue of the provisions of sections 478 and 479 of the Code.

It is a well-settled doctrine, at least in the federal courts, that a person who seeks to enforce a demand of any kind by a suit must allege all of the grounds that entitle him to the relief sought, because, if he fails to recover on one ground, the law will not permit him, after such failure, to obtain the same relief against the same party on some other ground which might have been advanced in the first action. A like rule applies to the defendant who is proceeded against. He should take advantage of all of his defenses, since the law will not allow him to test the merits of one defense, and, if defeated, interpose another. A judgment rendered against him establishes conclusively that he has no defense to the demand. The rule in question was once tersely stated by this court in the following language in the case of Board of Commissioners of Lake County v. Platt, 25 C. C. A. 87, 91, 79 Fed. 567:

> "In an action between the same parties, or those in privity with them, upon the same claim or demand, a judgment upon the merits is conclusive not only as to every matter offered, but as to every admissible matter which might have been offered to sustain or defeat the claim or demand."

See, also, to the same effect, Cromwell v. County of Sac, 94 U. S. 351, 352, 24 L. Ed. 195; Southern Minnesota Railway Extension Co. v. St. Paul & S. C. R. Co., 5 C. C. A. 249, 55 Fed. 690; Beloit v. Morgan, 7 Wall. 619, 621, 622, 19 L. Ed. 205; Hubbell v. United States, 171 U. S. 203, 18 Sup. Ct. 828, 43 L. Ed. 136; Southern Pacific Railroad v. United States, 168 U. S. 1, 48, 18 Sup. Ct. 18, 42 L. Ed. 355; Hardwick v. Young (Ky.) 62 S. W. 10.

In order that a person may be precluded from alleging certain facts as a ground of recovery or relief, it is not always necessary that they shall have been pleaded as a ground of recovery or defense in some other action between the same parties, and expressly declared to be insufficient to warrant a recovery or sustain a defense. It is sufficient if it appears that the party seeking to avail himself of such facts as a ground of recovery has had an opportunity to plead them in the former action as a defense thereto, and that they might have been pleaded and considered as a defense to the former action. Applying this doctrine to the case in hand, we are of opinion that the decree in the former suit is a bar to a recovery in the present action. The city had an undoubted right to plead, in opposition to a recovery in the former suit, the same facts on account of which it seeks a recovery in the present action,

Digitized by Google

and if they were in fact of such a nature as entitles it to a judgment against the defendants in the present suit for the cost of the improvement, then they would have precluded a recovery by the defendants in the former action, in that they would have shown that in that suit the defendants were not entitled to equitable relief. We conclude, therefore, that within the doctrine heretofore announced the decree in the former case estops the city from recovering against the defendants on a ground which, if it was ever tenable, might have been successfully pleaded as a defense to the former action.

The defendants, in connection with their answer, filed a cross-bill, which is in the nature of a bill of peace, wherein they pray that the city may be now enjoined from asserting any further claim against them on account of the work done and materials furnished in improving the street or road through their property, and from bringing any further actions to enforce a claim of that nature. Nothing was said concerning the cross-bill on the oral argument, and very little is said with respect to it in the brief. In view of this fact, and in view also of what has already been said concerning the right of the city to enforce the claim in question, we think that it is wholly unnecessary, and would be a work of supererogation, to grant any affirmative relief on the cross-bill.

The order of this court will be, for the reasons heretofore stated, that the decree of the Circuit Court be, and the same is hereby, reversed and annulled, and that the bill which was filed by the city be, and the same is hereby, dismissed, at its cost.

The appeal taken by the city in case No. 1,990 is also dismissed, at its cost.

HOOK, Circuit Judge (dissenting). It is conceded that the city of Davenport had ample power to improve the public highway and to assess the cost against the abutting property. It is also conceded that with one exception every requisite step in the proceedings from the initial resolution to the final completion of the improvement and the levy of the special assessment was literally and faithfully complied with. The single exception was that there was omitted from the contract a provision that the contractors should look exclusively to the special assessments for their compensation. In other words, the city absolutely obligated itself to pay the cost of the work. The indebtedness of the city thus attempted to be created was beyond the constitutional limit, and for that reason the Supreme Court of Iowa held, in a suit by the property owners, that the contract was void, and consequently that the special assessments based thereon were likewise void. Allen v. City of Davenport, 107 Iowa, 90, 77 N. W. 532. Subsequently the suit now before us was brought by the city against the property owners to recover and to have charged upon their property not the invalid assessments, but the actual value of the work and materials employed in the improvement. It was brought under those provisions of an Iowa statute which authorize such a recovery in case of a "defect" in the proceedings, which defeats the validity of the special assessments. Such a suit may be maintained by either the city or the contractor (Burlington v. Quick, 47 Iowa, 222), and it is to be especially

Digitized by Google

observed that it proceeds upon the theory that the assessments are void, and do not constitute the measure, or even an evidence, of the amount of recovery.

In substance, the opinion of a majority of this court is that the word "defect" in the Iowa law means a "mere informality or irregularity," but that a failure to make a valid contract is incurable; that the letting of the improvement on valid contract was a requirement of state statute, and therefore jurisdictional. The controlling question is whether the failure to make a valid contract is a defect within the meaning of that term as employed in the statute authorizing a suit to charge the property with the value of the work and materials after the special assessments have been declared invalid.

It is said in the foregoing opinion that a valid contract is a jurisdictional requirement. Whether a particular step in tax proceedings is jurisdictional, and, if not taken, is therefore beyond the reach of curative process, depends upon a consideration of the powers of the body whose authority is in question. The omissions which the Legislature may cure or authorize to be cured may be, in the absence of such authority, wholly beyond the power of the municipal authorities to remedy. It is not of infrequent occurrence that power to make public improvements and to assess the cost thereof upon property within defined taxing districts is conferred upon cities in very general terms, and that to them is delegated the duty of prescribing by ordinance the details of the procedure. In other cases the Legislature itself prescribes the course to be followed by the municipal authorities. But, whatever detail of procedure the Legislature could have dispensed with in the first instance, it may dispense with by a supplemental or curative law. And so of the power of the municipal authorities. And this suggests the test of a jurisdictional defect and of the validity of a curative proceeding. It may be conceded that the city of Davenport could not, without legislative authority, have dispensed with the letting of the work on valid contract, as that was one of the steps prescribed in the state law. But it is equally true that the making of such a contract is not a jurisdictional feature of the tax proceedings when tested by the power of the Legislature itself. It cannot be denied that the Legislature had power to authorize street improvements to be made without contract, and to provide that the value thereof be ascertained, and charged upon the abutting property by judicial proceedings. And, if it could have done that in the first instance, it may with equal right empower a city to accomplish the same result after a contract has been annulled and an attempt to levy special assessments thereunder has proved abortive. In Clinton v. Walliker, 98 Iowa, 655, 68 N. W. 431, it was said: "It has many times been held by this court that it is within the power of the Legislature to legalize any defect in proceedings of this kind if the defect or omission or want of compliance is such that it might have been dispensed with by a prior statute." An interesting illustration of this doctrine may be found in Richman v. Supervisors, 77 Iowa, 513, 42 N. W. 422, 4 L. R. A. 445, 14 Am.

Digitized by Google

St. Rep. 308. In this case the supervisors had constructed a levee, and assessed the cost thereof against certain lands supposed to be benefited. The proceedings were held to be void (Richman v. Sup'rs Muscatine Co., 70 Iowa, 627, 26 N. W. 24), because a petition had not been filed, signed by a majority of the residents on adjacent lands as required by law. Afterwards a curative act was passed by the Legislature declaring the levee to be a lawful structure, and authorizing the supervisors to proceed anew to ascertain the amount of the cost, and to reassess the same against the lands in proportion to the benefit received. Appropriate provision was made for a hearing of the landholders. It was held that in the passage of the law originally authorizing the proceedings the filing of a petition might have been omitted, and that, therefore, the curative act and proceedings thereunder were valid.

The requirement of a valid contract may be jurisdictional in the sense that it is mandatory upon the city authorities—in the sense that, being prescribed by the state law, the city cannot lawfully dispense with it; but it is not jurisdictional where the question is that of the power of the Legislature and the interpretation of a state statute. The authority for the proceedings before us on this appeal is found in an act of the Legislature and is not dependent upon a city ordinance. And the real question is whether the Legislature intended to include the omission to make a valid contract within the term "defect" as used in the curative statute. That that body was not averse to intrusting such comprehensive power to municipal authorities is shown by another law of Iowa (section 834, McClain's Code), whereby certain cities are empowered to even order the work anew and relevy the special assessments where those originally levied are declared invalid by reason of an "alleged nonconformity with any law." A curative statute may, in the absence of constitutional inhibition, be retrospective or it may be prospective in its operation, and thus supplement and accompany existing laws on the subject of municipal improvements. The law under consideration is of the latter character. It was designed to prevent the escape of property from liability for its just and equitable proportion of the cost of a public improvement which a city had the general power to make and did make in good faith.

As was said in Burlington v. Quick, 47 Iowa, 222:

> "The statute is broad, equitable, and remedial, and should not receive a narrow or strained construction. On the contrary, it should be so construed as to carry out the object, intent, and spirit the General Assembly evidently had in view in its enactment. If the improvement is such as the city is authorized to make according to the true intent of the law, then all errors and irregularities should be disregarded, and a recovery permitted for the proper proportion of the value of the work from the abutting property owner."

And as was said in Cooley on Taxation, 309, note:

> "The cases under the Iowa statute go farther, we think, than any others in sanctioning broad powers in the Legislature to cure defects."

I am unable to perceive any sufficient reason for the restricted meaning given to the term "defect," or for the narrow interpretation of the Iowa statute under which this suit was instituted. It

Digitized by Google

is true that a state law required the letting of the work on contract. But it is also true that the same law prescribed that the contract should be let (a) upon sealed proposals, (b) after 10 days' public notice, (c) in at least two newspapers, (d) the notice to state as nearly as practicable the extent of the work, (e) the kind of materials, (f) when the work shall be done, (g) and when the proposals will be acted on. Logically, the opinion of the court leads to the conclusion that a failure to strictly comply with any one of these requirements would place the assessments thereby rendered invalid beyond the reach of the curative statute. To this I cannot assent.

In Coggeshall v. Des Moines, 78 Iowa, 235, 41 N. W. 617, 42 N. W. 650, the special assessments were declared invalid because the notice inviting proposals did not specify the kind or character of the materials with which the improvement should be made, the recital being that the pavement was to be a modern one, and then in use. In Osburn v. Lyons, 104 Iowa, 160, 73 N. W. 650, the special assessments were held to be invalid for the reason that the contract was practically let without competition, there having been a substantial change in the time fixed in the published notice for the completion of the work. In each of these cases the Supreme Court of Iowa, without, however, determining the existence of any remaining liability of the property for the value of the improvements, expressly framed its decision so that such liability, if any, should not be said to have been adjudicated.

Gill v. Patton, 118 Iowa, 88, 91 N. W. 904. In this case an inferior court of competent jurisdiction had held the original assessments to be void because the notice for proposals did not state when the work should be done, or when the proposals would be acted upon. Thereafter the city council reassessed the cost of the improvement upon the abutting property under section 834, McClain's Code. The reassessment was upheld by the Supreme Court of that state. There is a striking analogy between this case and the one at bar. There was a failure to comply with statutory requirements. The assessments were adjudged to be void. Nevertheless reassessments for the same work by the city council were sustained under a statute which, in my opinion, is not broader or more liberal in its scope than the one under consideration.

It is also held in the foregoing opinion that the decree in the original suit brought by the property owners, and which resulted in the annulment of the contract and the special assessments, is a bar to the suit of the city to have the property charged with the value of the improvement; that the city should have presented its claim for this relief in the original suit. This conclusion seems to be directly contrary to an opinion of the Supreme Court of Iowa in this very litigation. After the original decision of that court invalidating the assessments, the city attempted in the trial court to ingraft on the proceedings the cause of action now before us. On the second appeal the Supreme Court reversed an order of the trial court allowing it to do so. Allen v. Davenport, 115 Iowa, 21, 87 N. W. 743. Among the reasons assigned, the Supreme Court

Digitized by Google

said that the cause of action was not in existence when the original suit in equity was submitted; that "the remedy was in a new action." The new action was thereupon brought, but this court now says it was barred by the decree in the original suit. In my opinion, the settled law is that a judgment of a court declaring special assessments void is not a bar, and does not prevent a city from employing its statutory power of reassessment. The right to reassess arises upon the ascertainment or judicial determination of the invalidity of the first proceedings. It does not exist before. In Gill v. Patton, supra, the court said, "And the prior adjudication in no way affected the reassessment." The same doctrine was recognized in Osburn v. Lyons and Coggeshall v. Des Moines, supra. In the latter case certain assessments were declared void by the Supreme Court of Iowa because the city council did not determine the character of the work in advance of the advertisement for proposals—a failure to observe a statutory requirement, as in this case. The city council reassessed the cost of the improvement. The new assessments came before the same court in Tuttle v. Polk, 84 Iowa, 12, 50 N. W. 38. They were upheld, and the court, in speaking of the previous judicial decisions, said: "It will thus be seen that there can be no final adjudication so long as the Legislature, by proper enactment, obviates the difficulty." In Norwood v. Baker, 172 U. S. 269, 19 Sup. Ct. 187, 43 L. Ed. 443, an assessment was held void as being imposed in violation of the Constitution of the United States. But the court said:

> "It should be observed that the decree did not relieve the abutting property from liability for such amount as could be properly assessed against it. Its legal effect, as we now adjudge, was only to prevent the enforcement of the particular assessment in question. It left the village, in its discretion, to take such steps as were within its power to take, either under existing statutes or under any authority that might thereafter be conferred upon it, to make a new assessment upon the plaintiff's abutting property for so much of the expense of opening the street as was found upon due and proper inquiry to be equal to the special benefits accruing to the property."

This language was referred to with approval in French v. Barber Asphalt Paving Company, 181 U. S. 324–344, 21 Sup. Ct. 625, 45 L. Ed. 879.

In Mills v. Charleton, 29 Wis. 400, 9 Am. Rep. 578, the court said:

> "The reassessment of a tax, the proceedings for the collection of which have once failed, is not a reopening of the judgment by which such former proceedings were declared invalid. Such judgment remains a perpetual stay of the proceedings to enforce the first assessment, but it only affects that assessment, and does not operate upon new proceedings subsequently taken to reassess."

In Dillon on Municipal Corporations, section 814 (652) it is said:

> "A reassessment under legislative authority may be made notwithstanding a final decree of a court enjoining the municipal authorities from collecting the first or original assessment."

The suit before us is essentially a proceeding in reassessment. It is none the less so because the machinery of a court is employed for the ascertainment of the amount of the charge. The city had general power to cause the highway to be graded, curbed, and

Digitized by Google

paved. Under the law appellants' property was liable for the cost thereof. The improvement was made and the abutting property consequently benefited. The original assessments against the property were declared invalid, not because of want of power in the city, but because of a defective execution of its power; no more defective, however, than in the cases of Norwood v. Baker and Coggeshall v. Des Moines, supra. This condition afforded a proper basis for reassessment. To make the reassessment effective, the city instituted a suit, especially provided by the law for the purpose, for the ascertainment of the actual value of the improvement, and that the property benefited be charged with the amount so judicially ascertained.

The Supreme Court of Iowa has said that the cause of action now before us was not in existence when the original suit in equity of the property owners was submitted; that a new suit was the appropriate remedy for its enforcement. How could the city have properly presented this cause of action in that suit? It claimed that its proceedings were regular. The trial court so decided, but they were held invalid on appeal to the Supreme Court. When tax proceedings are attacked in court, must a city, in order to preserve its statutory power of reassessment, at once confess their invalidity? I do not think so.

Moreover, I am unable to escape the conviction that serious error lies in the suggestion of this court that the decree in the first case forever bars the city from asserting any further claim on account of the improvement, and from adopting any further proceedings in respect thereof. I believe it to be beyond the power of this court to accomplish such result.

In Mills v. Charleton, supra, the court, in speaking of the taxing power in connection with remedial and curative statutes, very properly said:

> "It moves constantly forward to its object until that is accomplished, and, if turned aside by any obstacles or impediments, may return again and again to the same tax or assessment, until, the way being clear, the tax is paid or the assessment collected. Such is the force of this power, or of the sovereign body which exercises it, that it may remove all obstacles, and never cease to act until it has attained the appointed end for which it was delegated."

As was observed by Chief Justice Chase (Bank v. Fenno, 8 Wall. 548, 19 L. Ed. 482), "The judicial cannot prescribe to the legislative departments of the government limitations upon the exercise of its acknowledged powers."

Digitized by Google

(132 Fed. 460.)

CHICAGO, M. & ST. P. RY. CO. v. BENTON.

(Circuit Court of Appeals, Eighth Circuit. August 26, 1904.)

No. 2,054.

1. TRIAL—INJURY TO EMPLOYÉ—PEREMPTORY INSTRUCTION.

The foreman of a switching crew in the yard of a railway company was walking a few feet in advance and to the side of the rear of a train of backing cars, signaling to the engineer, when the rear car was derailed by low joints in the track, veered upon and killed him. These low joints were opposite each other, had existed for six months, and the fish plates upon them were loose. They were at a busy place in the yard, where during daylight the wheels of about 600 cars pounded over them daily. They were perceptible to one riding over them upon a train, but they were at a street crossing, which was planked, and there was no evidence that the foreman had ever examined them, or that he knew the condition of the fish plates. *Held*, the questions of negligence, assumption of risk, and contributory negligence were for the jury.

(Syllabus by the Court.)

In Error to the Circuit Court of the United States for the District of Minnesota.

F. W. Root, for plaintiff in error.

Henry W. Benton and Joseph W. Molyneaux, for defendant in error.

Before SANBORN and HOOK, Circuit Judges, and AMIDON, District Judge.

SANBORN, Circuit Judge. The only error alleged in this case is that the court refused at the close of the evidence to direct a verdict and judgment for the defendant. The action was for damages for negligence of the railway company, and the defense was the contributory negligence of the deceased. There was evidence tending to prove these alleged facts: John H. Stephenson, for whose death the administrator of his estate brought this action, was run over and killed by a train of cars in the yards of the defendant at Minneapolis on March 19, 1902. He was the foreman of a switching crew, and had been at work in those yards for some years. At the time of the accident he was walking on the side of the railroad track from five to ten feet distant and somewhat ahead of the rear one of a train of seven cars, which was backing along the track pursuant to his signals to the engineer. The two cars of the rear of the train were empty box cars, and the brake was set upon one of them. There were low joints in the rails of the track opposite each other. These joints were at a street crossing, which was planked for the passage of teams and footmen. The train was backing at the rate of ten or twelve miles an hour. Stephenson was walking with his back towards the train, signaling to the engineer to come on, when the rear car struck the low joints, jumped

¶ 1. Assumption of risks incident to employment, see note to Chesapeake & O. R. Co. v. Hennessey, 38 C. C. A. 314.

Digitized by Google

the track, veered towards, ran over and killed him. The low joints had existed in about the same condition for six months. A member of Stephenson's crew had noticed them when riding over them six months before, but he had never examined them, and Stephenson's knowledge of them was of about the same character as that of this member of his crew. The low joints were in a busy place in the railroad yard of the defendant, where during daylight about 600 cars passed over them daily, and where Stephenson's crew ordinarily took 30 cars over them every day. "A low joint is where a tie underneath that joint has been pounded so many times by wheels passing over it that there is a little space underneath that tie, and the rails will give when the wheels go over it." No accident had ever occurred on account of these joints before that which caused the death of Stephenson. An examination immediately after the accident disclosed the fact that the fish plates which held the ends of the rails in line and together were loose, and that the end of one of the rails could be moved by the pressure of the foot to the side of and below the end of the opposite rail, which was connected with it, to the extent of about a quarter of an inch. But there was no evidence that Stephenson ever made any such examination, or was aware of this condition. There was evidence of other facts at the trial, but none that are material to the questions presented to this court. Those questions are, would all reasonable men, in the exercise of a fair and impartial judgment, be led by the facts which have been recited to the conclusion that the railway company was not guilty of any lack of ordinary care which caused the death of Stephenson, or to the conclusion that the deceased either assumed the risk of the accident, or was guilty of negligence which contributed to it?

The duty to exercise ordinary care to inspect and to maintain in a reasonably safe condition the railroad over which the deceased was operating his train rested upon the defendant. The low joints which caused the accident had existed for the period of six months in the yard of the company where they were daily pounded by the wheels of 600 cars, and these facts were sufficient to warrant the jury in finding that the company had, or ought to have had, notice of them, upon the ground that a reasonably careful inspection of the track must have disclosed the defect in it as well as the fact that the fish plates were loose and that the ends of the rails were not firmly held in line. The inevitable effect of the continual pounding of the wheels of cars upon low joints in railroads must be to produce the destruction of the track and the derailment of the trains at some time, unless suitable steps are taken to repair and sustain them. If they are subject to constant use without inspection or repair, the coming of disaster, and probably of death, from them is a mere matter of time. These facts force the mind to the conclusion that some reasonable men, in the exercise of a fair judgment, might honestly reach the conclusion that a railway company which permitted the same low joints to exist for six months in a busy yard, where they were daily pounded by the wheels of

Digitized by Google

600 cars, might reasonably have anticipated as a natural and probable result of their existence derailment and disaster, and that it failed to exercise ordinary care to inspect, repair, and maintain its railroad in a reasonably safe condition.

Nor does the record in this case convince that the evidence that the deceased was guilty of negligence which contributed to his injury was so clearly preponderant that it was the duty of the court to peremptorily instruct the jury to return a verdict for the defendant. The primary duty was not upon him, but upon the railway company, to exercise reasonable care to inspect and know the nature of the defect in the track and the danger from it, and to make the railroad reasonably safe. The first duty of the foreman of the switch crew was to operate his train upon the track with reasonable care. The presumption of law and of fact is, in the absence of countervailing evidence, that masters and servants alike have done their duty; and while the negligence of the railway company and of its section men in the care and maintenance of the track constitutes no excuse for any negligence of the deceased, the facts that it was their duty to exercise ordinary care to keep the railroad in a reasonably safe condition, and that the presumption was that they had done so, might well be considered by the jury in determining whether or not a man of ordinary prudence in the situation of the deceased might not have reasonably inferred that, though the joints were low, they must have been inspected by those whose duty it was to do so, and have been found to be reasonably safe, so that it was not dangerous for him to use them. The facts of this case and the logical deductions from them fail to persuade that such an inference and the course of action which the deceased pursued would indicate to the minds of all reasonable men any lack of ordinary care on his part, and they fail to convince that the contributory negligence of the deceased was conclusively established.

For like reasons the evidence of the assumption of the risk of the derailment of the train was not so clearly preponderant as to require the court to withdraw that question from the jury. A servant assumes the risks and dangers of his employment which he knows, appreciates, and takes without objection, although they result from the negligence of his master. Where the defects are obvious, and the dangers from them are so apparent that a person of ordinary prudence in his situation would not fail to understand them, he cannot escape by proof that he did not appreciate them. St. Louis Cordage Co. v. Miller, 126 Fed. 495, 511, 61 C. C. A. 477, 63 L. R. A. 551; Choctaw, Oklahoma, etc., R. Co. v. McDade, 191 U. S. 64, 24 Sup. Ct. 24, 48 L. Ed. 96. But although the defects are obvious, where it is not his duty to examine and ascertain their exact condition and the danger from them, and where this danger is not apparent, and the servant does not know or appreciate it, he does not necessarily assume the risk of it. The degrees of care for, and of knowledge and appreciation of dangers from defects in the roadbed and track of a railroad which condition the position of the company and of the section men and those which condition

Digitized by Google

the situation of the trainmen are not the same. Upon the former the law imposes the duty of inspecting the railroad, of giving notice to the trainmen of all dangers and defects, and of removing them. To them the notice of a defect is a notice of all the facts and dangers which a reasonable examination of it with a view to removing it would ascertain. The primary duty of the latter is to operate their trains upon the railroad, which they have the right to assume, in the absence of countervailing evidence, that the company and the section men have inspected and found to be or made reasonably safe. Stephenson was undoubtedly aware of the low joints and of their long existence. But there are low joints in railroads which threaten the immediate derailment of cars passing over them at the ordinary rate of speed and low joints which present no such threat. To the company, whose duty it was to inspect and know what joints threatened danger and what were safe, the existence of a defect was notice of the danger it portended whether the company was aware of it or not. To the trainman driving his train along the railroad free from the duty to inspect, examine, and know the dangers threatened by a low joint, the danger of derailment and disaster from it may not have been apparent. Stephenson's knowledge and appreciation of the danger from the low joints which injured him may have been, and probably was, limited to his knowledge of the existence of the low joints, and may have been, and probably was, conditioned by his assumption that they had been examined by the company, and found to be reasonably safe. The record is barren of testimony that he had ever examined them, or that he had ever learned that the fish plates which connected the rails were loose, and no accident had ever happened on account of them before that which injured him. The inference that the deceased knew or appreciated, or that a person of ordinary prudence and diligence in his situation, by the exercise of ordinary care, would have known or appreciated, the risk or danger of a derailment of his train by the action of these low joints, is not so clear that reasonable men might not fairly have reached a different conclusion, and hence the assumption of the risk by the deceased was not so conclusively established that it was the duty of the court to withdraw that question from the jury.

The principles and rules of law which control this case have been so often stated by this court that it is unnecessary to do more than to refer to the cases of St. Louis Cordage Co. v. Miller, 126 Fed. 495, 502, 511, 61 C. C. A. 477, 63 L. R. A. 551, Chicago Great Western Ry. Co. v. Price, 38 C. C. A. 239, 246, 97 Fed. 423, 430, and Chicago Great Western Ry. Co. v. Roddy, 131 Fed. 712, 65 C. C. A. 470, where the rules and the reasons upon which they rest have been discussed and declared with some care.

Upon the authority of those cases the judgment below is affirmed.

Digitized by Google

(130 Fed. 699.)

CAMPBELL v. NATIONAL BROADWAY BANK.

(Circuit Court of Appeals, Second Circuit. April 19, 1904.)

No. 162.

1. BANKS—DRAFTS ISSUED BY CASHIER TO INDIVIDUAL CREDITOR—IMPLIED AUTHORITY.

A bank cannot recover the amount collected on a cashier's draft issued by its cashier and made payable to his individual creditor, where it is shown that the cashier had on numerous previous occasions drawn similar drafts in payment of his own debts, and such acts had continued for a period sufficiently long to establish a settled course of business in the conduct of the bank which had been sanctioned by its officers, and was known, or should have been known, to its directors.

In Error to the Circuit Court of the United States for the Southern District of New York.

On writ of error to the United States Circuit Court for the Southern District of New York, to review a judgment in favor of the defendant in error, who was defendant below, entered upon the verdict of a jury.

George W. Wickersham, for plaintiff in error.

William J. Curtis and Francis D. Pollak, for defendant in error.

Before WALLACE, TOWNSEND, and COXE, Circuit Judges.

COXE, Circuit Judge. This action was commenced by the plaintiff, as ancillary receiver, to recover $12,150 and interest, being the amount due on three cashier's drafts, drawn by George M. Valentine, cashier of the Middlesex County Bank, of Perth Amboy, N. J., on its New York correspondent, the National Park Bank of New York, to the order of the defendant, the National Broadway Bank. These drafts were given by Valentine in payment of his individual obligations to the said Broadway Bank.

It is argued that "the court erred in instructing the jury that if during a series of years sufficiently long, and in business transactions sufficiently numerous to make out a regular course of business in the conduct of the bank, the cashier had been accustomed to sign the checks of his bank payable to his own order, or to the order of his creditors, then the defendant was entitled to a verdict." The instructions excepted to are in accord with the decision of this court in Gale v. Chase National Bank, 104 Fed. 214, 43 C. C. A. 496, which cannot be distinguished, on principle, from the case at bar. In the Gale Case a cashier's draft, given to discharge his individual debt, was under consideration, and it was decided that where it appears that the cashier had, on numerous previous occasions, drawn similar drafts to pay similar debts, and such acts had continued for a period sufficiently long to establish a settled course of business which had been sanctioned and ratified by the officers of the bank, it might be inferred by the jury that such acts were known, or should have been known, to the directors of the bank and that the cashier's acts were authorized. This, in substance, was the proposition charged in the present case and the jury were told that the burden was upon the

Digitized by Google

defendant to show that the drafts in question, which on their face were calculated to excite suspicion, were drawn in the ordinary business of the bank. The charge was as favorable to the plaintiff as the facts and the law warranted. The Gale Case was again considered by this court (108 Fed. 987, 46 C. C. A. 683), and subsequently by the Supreme Court (188 U. S. 557, 23 Sup. Ct. 372, 47 L. Ed. 594), but the law of the first decision, in so far as it relates to the questions now under consideration, has not been changed or modified. It is the law of this court to-day and we see no reason why it should not be followed. It seems to be conceded by the plaintiff that if the court adheres to its former decision it is conclusive of the principal question involved. In order to show a course of business at the Middlesex Bank which permitted the use of the cashier's checks in payment of his personal obligations, that such business was open and notorious and that the president of the bank had actual knowledge of what was being done, the defendant was permitted to prove a number of such checks previously drawn by Valentine, as cashier, to the order of a broker who represented Valentine in stock speculations. The defendant also proved that this broker, when the first cashier's draft was offered to him by Valentine, declined to receive it until assured that it was authorized; that he had a conversation with the president of the bank, informed him of the unusual character of the draft, asked if the cashier had authority to give such a draft and was informed by the president that he had. The objections of the plaintiff to this evidence, and to other evidence of similar import, are inconsistent with his theory that it was necessary to show knowledge in the directors, and the objections were properly overruled. If actual knowledge were necessary it is not perceived how it could be proved more conclusively, as to the president at least, than by showing that he knew of Valentine's acts, was informed that they were unusual and suspicious and, thereafter, declared them to be authorized and permitted them to continue. The cause was carefully tried and no error was committed of which the plaintiff has a right to complain.

The judgment is affirmed with costs.

(130 Fed. 700.)

In re EDELMAN et al.

(Circuit Court of Appeals, Second Circuit. April 5, 1904.)

No. 206.

1. BANKRUPTCY—ACTS OF BANKRUPTCY—MORTGAGE.

A mortgage made by an insolvent, and recorded within four months prior to the filing of a petition in bankruptcy against him, if given with intent to prefer a creditor, constitutes an act of bankruptcy.

Appeal from the District Court of the United States for the Southern District of New York.

In Bankruptcy. This cause comes here upon appeal from an order of the District Court, Southern District of New York, adjudging the appellants bankrupts.

Digitized by Google

Moses Jaffee, for appellants.
Henry W. Eaton, for appellee.

Before WALLACE, LACOMBE, and COXE, Circuit Judges.

LACOMBE, Circuit Judge. The petition charges three acts of bankruptcy: (1) The making of a mortgage of real estate in Broome street to one Joseph Liebling February 13, 1903, for the sum of $2,000; (2) the making of a similar mortgage to one Ida Levy December 27, 1902, for the sum of $6,000; (3) the suffering a judgment to be entered against appellants in favor of Don A. Gaylord, one of the petitioning creditors, for $990.21, on May 1, 1903. It will be sufficient to consider one only of these acts, the mortgage to Ida Levy. Petition was filed July 9, 1903. Answer was served, and testimony upon the issues was taken before a special commissioner. The alleged bankrupts admitted the making of the mortgage, and that it was not recorded until March 12, 1903—less than four months before the petition was filed, and therefore within the time prescribed in Section 3b, Act July 1, 1898, c. 541, 30 Stat. 546 [U. S. Comp. St. 1901, p. 3422]. They also admitted that there were prior mortgages outstanding on the premises aggregating $48,000. They joined issue with the averments that said mortgage was given with intent to prefer, and that they were insolvent when it was made. To show an intent to prefer, a witness called by the petitioners testified to admissions made by Edelman, subsequent to the filing of the petition, that, besides the $48,000, the firm owed over $9,000 to various creditors; and that the mortgage to Ida Levy was given for money which had been previously loaned to the firm. The evidence was slight, but, in the absence of any testimony controverting it, and in view of the circumstance that the mortgagee did not record the mortgage until several months after its execution, it was sufficient to warrant the finding of the commissioner that the transaction was with intent to prefer. A "conditional" transfer of property "as a * * * pledge, mortgage, * * * or security" is within the provisions of section 3a (2) by the express definition of the word "transfer" which is given in section 1 (25), 30 Stat. 545 [U. S. Comp. St. 1901, p. 3420].

As to the issue of insolvency the special commissioner reports that "the alleged bankrupts have not appeared, nor have they produced their books, papers, and accounts, nor have they submitted to an examination, nor have they given testimony as to all matters tending to establish their solvency"; and the accuracy of this statement is not questioned. Therefore, under section 3d the burden of proving their solvency at the time of the commission of the act specified in 3a (2) rested upon them. Having failed to give any proof of solvency the special commissioner correctly found that the transfer by mortgage was given while insolvent.

The order confirming report of the special commissioner and adjudicating appellants bankrupts is affirmed.

Digitized by Google

(132 Fed. 603.)

WESTERN COAL & MINING CO. v. PETTY.

(Circuit Court of Appeals, Eighth Circuit. September 5, 1904.)

No. 2,034.

1. TRESPASS—SEPARATE ACTIONS AGAINST JOINT TRESPASSERS—ACCEPTING SATISFACTION OF JUDGMENT.

Where one may bring actions against two joint trespassers severally, he may recover separate judgments, and may elect between them. He is not required to accept satisfaction of the judgment in one case before the other is tried, but, if he does so, he voluntarily abandons his demand against the defendant in the other.

2. COSTS—DISMISSAL OF ACTION—PLEADING.

An action in a federal court against two defendants as joint trespassers was dismissed as to one for want of jurisdiction, and plaintiff then sued such defendant in a state court, and recovered a judgment, which was satisfied in full, and payment accepted. Defendant in the federal court then filed an amended answer, setting up the recovery and satisfaction of such judgment as a defense additional to those previously pleaded, as permitted by the state practice, and plaintiff, conceding the sufficiency of such defense, dismissed the action. *Held*, that the amended answer was not a waiver of the prior defenses, nor an admission of the justice of plaintiff's original claim, and that there was nothing in the record which took the case out of the general rule, by which defendant, as the prevailing party, was entitled to a judgment for costs.

3. ERROR—WHEN WRIT LIES—JUDGMENT FOR COSTS.

The rule that a decree or judgment for costs alone is not reviewable applies only to cases in equity or admiralty, in which the awarding of costs is not, generally speaking, a matter of strict right, but is largely a matter of discretion. In an action at law in a federal Circuit Court, where, except in the few instances, otherwise provided by statute, the prevailing party is entitled to costs as a matter of positive right, a judgment rendered on dismissal denying such right may be reviewed by writ of error.

In Error to the Circuit Court of the United States for the Western District of Arkansas.

Petty brought an action against the Western Coal & Mining Company and the St. Louis, Iron Mountain & Southern Railway Company to recover damages claimed to have been caused by their joint trespass upon his lands. The coal company answered, specifically denying the trespass, and also alleging that Petty's cause of action was barred by the statute of limitations. The cause was dismissed as to the railway company for want of jurisdiction. Subsequently Petty brought an action for the same trespass in the state court against the railway company, and recovered a judgment, which was afterwards fully satisfied. Thereupon the coal company, by leave of court, filed an amended answer in the action which was still pending against it in the Circuit Court, in which it set up as an additional defense the recovery and satisfaction of the judgment in the state court against the railway company. Petty conceded this defense to be sufficient, and upon his motion the action against the coal company was dismissed, and the Circuit Court taxed against it all of the costs which had accrued prior to the filing of the amended answer. The coal company insisted that it was ready for trial, that it was entitled to have the other defenses set up in its amended answer determined, and it protested against the taxation of the costs. A judgment was rendered against the coal company for the costs so taxed, and from such judgment it prosecutes this proceeding in error.

¶ 1. See Trespass, vol. 46, Cent. Dig. §§ 70, 155.

Digitized by Google

Ira D. Oglesby, for plaintiff in error.

T. P. Winchester and W. R. Martin, for defendant in error.

Before SANBORN, VAN DEVANTER, and HOOK, Circuit Judges.

HOOK, Circuit Judge, after stating the case as above, delivered the opinion of the court.

It is the general rule that the prevailing party in an action at law in a court of the United States is entitled as a matter of right to a judgment for costs. It must be admitted, however, that there is some question whether the acts of Congress so provide definitely and specifically. The nearest approach to a positive rule is found in section 983 of the Revised Statutes [U. S. Comp. St. 1901, p. 706], which provides that "the bill of fees of the clerk, marshal and attorney and the amount paid printers and witnesses * * * in cases where by law costs are recoverable in favor of the prevailing party, shall be taxed by a judge or clerk of the court and be included in and form a portion of a judgment or decree against the losing party." Notwithstanding the indefinite expression "where by law costs are recoverable," this section, with others upon the subject of fees and costs (Rev. St. §§ 823–857 [U. S. Comp. St. 1901, pp. 632, 658]), has quite generally been accepted as sufficient authority for such a right in favor of a successful litigant. An indirect confirmation of this conclusion may be found in Act May 28, 1896, c. 252, 29 Stat. 183 [U. S. Comp. St. 1901, p. 617], as amended in 1897. Regulations were therein made concerning the fees and salaries of certain officers, and it was provided by section 17 "that sections 6 to 15 inclusive of this act shall not be so construed as to prevent or affect the amount or taxation of costs against the unsuccessful party in civil proceedings, or against defendants convicted of crimes or misdemeanors." The fragmentary character of the provisions of the acts of Congress upon this subject is due to the fact that they were framed in recognition of an almost universal usage in courts of justice of allowing costs to the prevailing party, rather than to any supposed necessity for affirmative legislation. In Kittredge v. Race, 92 U. S. 116, 121, 23 L. Ed. 488, Mr. Justice Bradley said: "In actions at law it is a general rule that the losing parties, or the parties against whom judgment is rendered, are to pay the costs; and no apportionment of the costs is made between them." In United States v. Schurz, 102 U. S. 407, 26 L. Ed. 219, Mr. Justice Miller said: "But a careful examination of the authorities leaves us no option but to follow the rule that the prevailing party shall recover of the unsuccessful one the legal costs which he has expended in obtaining his rights." See, also, Trinidad Asphalt Paving Co. v. Robinson (C. C.) 52 Fed. 347; United States v. Treadwell (D. C.) 15 Fed. 532; Cooper v. New Haven Steamboat Co. (D. C.) 18 Fed. 588.

Was there anything in this case which removed it from the operation of the general rule? Petty sued the coal company, and afterwards abandoned and dismissed his action against it. Clearly, he was not the successful litigant, so far as that company was concerned. On the contrary, the coal company was the prevailing party. It does not

Digitized by Google

follow that Petty had a good cause of action against that company merely because he recovered a judgment against the railway company in another action in the state court. If a plaintiff dismisses his action, a court will not stop to inquire as to the merits of his cause of action merely for the purpose of adjusting the costs. Nor does it follow that, because a plaintiff has a meritorious cause of action, he may voluntarily dismiss an action upon it at the cost of an objecting adversary.

In its original answer the coal company set up two defenses. It denied specifically that it was guilty of a trespass on Petty's lands, and it pleaded the statute of limitations. After Petty had sued the railway company, an alleged joint trespasser, in the state court, and had recovered judgment against it, and had accepted full satisfaction of such judgment, the coal company interposed an amended answer setting up the facts just recited, together with the first two defenses. Petty acknowledged the force of the new defense. Upon his motion his action was dismissed and a judgment was rendered against the coal company for a large amount of costs. A dismissal of Petty's action was inevitable under the circumstances, but it was due to his voluntary act in accepting satisfaction of his judgment against the railway company. He was not required to receive payment from that company before the trial of his pending action against the coal company, but he chose to do so. Where one may bring actions against joint trespassers severally, he may recover separate judgments. If the judgments vary in amount, he may elect de melioribus damnis, but his election must precede the acceptance of satisfaction. Acceptance of satisfaction from one is a voluntary and irrevocable abandonment of his demands against the other. If one of two parties charged with a joint trespass and sued separately concludes to pay in full without further litigation, and his payment is accepted, the other party ought not to be prejudiced thereby in respect of his defenses. Nevertheless it is in the interest of the proper administration of justice that the fact of satisfaction be made known to the court in which the other action is pending, in order that there may be no further litigation over an extinguished demand. We are unable to assent to the conclusion that the third defense in the amended answer of the coal company was an admission of the justice of Petty's claims upon which could be predicated the judgment for costs.

When the action was dismissed at the cost of the coal company it objected, and insisted upon its defenses upon the merits and the statute of limitations. The interposition of the third defense was not a waiver of the others. There was no repugnancy between them. The doctrine of repugnancy in pleading is generally applied to inconsistent averments in the same count or ground of defense. It is not applied with such strictness to an inconsistency between separate defenses. Thus, in McIlroy v. Buckner, 35 Ark. 555, 560, it was said that a "defendant may put in a number of defenses in distinct paragraphs, and, if each is consistent with itself, it is not essential that they should consist with each other." An early practice act of Arkansas provided that the defendant "may plead as many civil matters, whether of law or fact, as he may think necessary for his defense." It was held by the Supreme Court of the state in construing this act that

Digitized by Google

a defendant had a right to set up inconsistent pleas in separate paragraphs. Lincoln v. Wilamowicz, 7 Ark. 378. In this case the court overruled a prior decision holding that a plea of conditions performed admitting the execution of a deed could not be joined with a plea of non est factum. The present practice act of Arkansas provides that "the defendant may set forth in his answer as many grounds of defense, counterclaim, or set-off, whether legal or equitable, as he shall have." Sandels & H. Digest, § 5722.

The remaining question is whether a writ of error lies where the only question involved is one in respect of costs. In Wood v. Weimar, 104 U. S. 786, 792, 26 L. Ed. 779, it was said: "If this were all there was in the case, we should, under our uniform practice, decline to consider it. No writ of error lies from a judgment as to costs alone. Canter v. Ins. Co., 3 Pet. 307, 7 L. Ed. 688; Fabrics Co. v. Smith, 100 U. S. 110, 25 L. Ed. 547. But there are other questions, and this may, therefore, properly be taken up." It is apparent that this observation was wholly incidental, and was unnecessary to the decision of the case. Of the cases which were cited, one (Canter v. Insurance Companies) was an appeal from a decree in admiralty, and the other (Fabrics Co. v. Smith) was an appeal from a decree in equity. It is to such cases only that the uniform practice applies. Russell v. Farley, 105 U. S. 433, 437, 26 L. Ed. 1060; Paper Bag Cases, 105 U. S. 766, 772, 26 L. Ed. 959; City Nat. Bank v. Hunter, 152 U. S. 512, 516, 14 Sup. Ct. 675, 38 L. Ed. 534; Du Bois v. Kirk, 158 U. S. 58, 15 Sup. Ct. 729, 39 L. Ed. 895; Clarke v. Warehouse Co., 62 Fed. 328, 10 C. C. A. 387. But see Handy v. Adams, 80 Fed. 297, 303, 25 C. C. A. 430; Citizens' Bank v. Cannon, 164 U. S. 319, 324, 17 Sup. Ct. 89, 41 L. Ed. 451. And it rests upon the rule that the award of costs in courts of equity and admiralty is not, generally speaking, a matter of strict right, but is largely a matter of discretion. We have seen, however, that this is not the rule in courts of law. Excepting in the few instances otherwise provided by statute, the prevailing party in an action at law is entitled to costs as a matter of positive right; and where, in such an action pending in a Circuit Court of the United States, a judgment is rendered disposing of the case by dismissal or otherwise, a denial of the right may be reviewed by a proceeding in error. It appears that during the pendency of the action in the Circuit Court a trial resulted in a verdict against the coal company, but the verdict was vacated, and a new trial granted. It is clear, however, that neither that fact nor the reasons which actuated the court in vacating the verdict can have any bearing upon the questions presented here.

The judgment of the Circuit Court will be reversed, with directions to enter a judgment in favor of the plaintiff in error for all of its costs in the cause.

Digitized by Google

(132 Fed. 305.)

LAND TITLE & TRUST CO. v. TATNALL et al.

(Circuit Court of Appeals, Third Circuit. September 8, 1904.)

Nos. 45, 47.

1. APPEALABLE ORDERS—DENYING LEAVE TO INTERVENE.

An order denying the petition of a bondholder for leave to intervene in a foreclosure suit brought by the mortgage trustee as representing all the bondholders *held* discretionary, and not appealable. Land Title & Trust Co. v. Asphalt Co. of America (C. C. A.) 127 Fed. 1, 62 C. C. A. 23, followed.

2. CORPORATIONS—SUIT BY TRUSTEE FOR BONDHOLDERS—DISCRETION OF COURT AS TO MATTERS LITIGATED.

A court of equity in a suit by a trustee for bondholders of a corporation to obtain a sale of securities pledged with it for the benefit of the bondholders is not required, at the instance of an intervening bondholder, to direct the adjustment by way of set-off in the course of distribution of the fund realized of unliquidated demands against certain of the bondholders on account of unpaid stock subscriptions and other alleged liabilities growing out of the promotion of the corporation, but may properly leave such matters to be liquidated in independent suits, both because such is the more orderly course of procedure and because general creditors of the corporation as well as the bondholders are entitled to share in the proceeds of such recoveries.

Appeal from the Circuit Court of the United States for the District of New Jersey.

John Douglass Brown, for petitioner.

Julien T. Davies, John G. Johnson, and A. H. Wintersteen, for appellees.

Before ACHESON, DALLAS, and GRAY, Circuit Judges.

ACHESON, Circuit Judge. These are two appeals by William C. Bullitt from decrees of the Circuit Court of the United States for the District of New Jersey entered, respectively, on July 6, 1903, and January 8, 1904, in the consolidated cause in equity of the Land Title & Trust Company v. Henry Tatnall, Receiver of the Asphalt Company of America, and others, denying the appellant's petitions for leave to intervene in the cause and for other relief. The appellant is the holder partly in his own right and partly in a representative capacity of certain collateral gold certificates issued by the Land Title & Trust Company under an agreement between that company and the Asphalt Company of America, dated July 15, 1899, whereby the latter company agreed to make certain payments to the Land Title & Trust Company, and as security for such payments to deposit with that company certain stocks and bonds, the holders of the said certificates being entitled to receive from the Land Title & Trust Company, out of the moneys so to be paid to it by the Asphalt Company, certain specified sums at designated times. Upon the appeals of Harry C. Spinks, which we recently heard and disposed of (127 Fed. 1),[1] we had before us the above-mentioned agreement of July 15, 1899, and the affiliated agreement of December 31, 1900, for the further security of the holders of the certificates, and we then had occasion to consider the relation between the certificate holders and the Asphalt Company of Ameri-

[1] 62 C. C. A. 23.

Digitized by Google

ca. The pertinent facts are set forth with much fullness, and the whole subject is discussed, in the opinion of this court delivered by Judge Gray in that case. Land Title & Trust Co. v. Asphalt Co. of America, 127 Fed. 1.[2] We there determined that these certificate holders were not creditors of the Asphalt Company of America, and that they were represented in this litigation by their trustee, the Land Title & Trust Company. The views of this court are thus stated in that opinion:

"The appellant (Spinks) is the owner of 133 of the collateral gold certificates issued by the Land Title & Trust Company under the agreement of July 15, 1899. The total amount outstanding of said certificates, as found by the master appointed by the court, and by the court in its decree of April 3, 1903, was $29,830,754.57. About 2,000 persons hold these certificates. It was not contemplated by the court, nor necessary, that the receivers should have presented to them for allowance certificates in the hands of individual holders, as the decree itself fixed the aggregate amount of them outstanding, and made it unnecessary for holders to prove their individual claims. The Land Title & Trust Company was not merely a trustee of property pledged or mortgaged to it, but was also the creditor of the Asphalt Company of America. The Asphalt Company of America acknowledged the sum total of its indebtedness to the said the Land Title & Trust Company, and conveyed to it its property and effects in pledge to secure the same, the trustee issuing the gold certificates to the various holders to the aggregate amount already stated, and making them its cestui que trustent for the payment of the interest and principal, when received from the debtor company. It was, therefore, the Land Title & Trust Company, as trustee, which was entitled, as creditor of the insolvent company, to prove the aggregate debt, including, of course, that part of it represented by the certificate held by the appellant. The decree of the court of April 3, 1903, fixed the status of the holders of collateral gold certificates as holders thereof in accordance with the agreement of July 15, 1899, between the Land Title & Trust Company and the Asphalt Company of America, to the amount in par value of $29,430,754.57, and the holders of such certificates were therefore adjudicated to be entitled, through their trustee, as valid claimants secured by said agreement.

"The contention of the appellant that the direction to the receiver to receive proof of all debts and obligations of the Asphalt Company of America entitled him to present his claim as a holder of collateral gold certificates cannot be supported. The receiver allowed and reported upon no claims of holders of collateral gold certificates, and it does not appear that any application, other than that of the appellant, was made to him for that purpose. No good reason was shown why appellant's case should be segregated from that of 2,000 other holders, or that his security as such holder was in any way affected to his detriment by the decision of the receivers. The appellant became the owner of his gold certificates, subject to any limitations imposed by the form in which they were made; that is to say, the obligations entered by the Asphalt Company of America in and by said agreement of pledge or by the said trustee. The company covenants in said agreement to pay to the trustee the moneys necessary to pay interest on the certificates as they fall due, and also certain sinking fund amounts, and it is the trustee only who has, by the form of such certificate, direct obligation to the certificate holder, and in the said agreement of July 15, 1899, it is expressly provided that 'any proceedings to enforce any covenant of the company herein contained by legal proceedings shall be in the name of the trustee for the benefit of all the holders of the certificates outstanding.'" 127 Fed. 16, 17, 62 C. C. A. 38, 39.

In conformity with the foregoing views, and upon great consideration, we held that the appellant, Spinks, was not entitled to intervene in this litigation by reason of his holding collateral gold certificates issued under this agreement of July 15, 1899, and that the court below rightly denied his petitions for intervention in the cause, although, besides be-

[2] 62 C. C. A. 23.

Digitized by Google

ing a holder of certificates, he was also a stockholder of the asphalt company.

Upon the appeals of Spinks we further held that the orders denying his petition for intervention were not appealable. Speaking for this court, Judge Gray there said:

"Such orders are not final decisions, in the sense of the statute, and are within the discretion of the court making them, unless it shall affirmatively appear that the petition of intervention was for the purpose of enforcing an individual right of the petitioner, for the assertion of which there is no other remedy, and which will be entirely lost if intervention is denied. If, for instance, a fund is to be distributed by the court in a suit then before it, the denial of a petition to intervene of one who claims the right to participate in the distribution by reason of a title distinct and apart from all other individuals or classes to be affected by the decree would be a final decree as to such petitioner, for the reasons that his claim of right would be finally disposed of and lost by such denial. The petition to intervene in such case is of right, and not addressed merely to the discretion of the court.

"The general rule, however, is as stated by the Circuit Court of Appeals in Hamlin v. Toledo, St. L. & K. C. R. R. Co., 78 Fed. 665, 24 C. C. A. 272, 36 L. R. A. 826: 'The allowance or denial of the application of a stranger to be admitted as a party defendant to a pending suit in equity rests in the sound discretion of the chancellor. The denial of such an application is not such a final decree as is the subject of appeal. * * * Such an application is a mere motion in the case, made by one not a party, and is not of itself an independent suit in equity appealable here.' Ex parte Cutting, 94 U. S. 14, 22, 24 L. Ed. 49.

"The application to intervene in both the first and third appeals was broadly upon the ground that the party by whom the interests of the intervener should be represented (in the one case the Land Title & Trust Company, trustee, and in the other the receivers) was not representing such interests properly. No individual or separate interest of the petitioner, which could not otherwise be adjudicated at all, and would therefore be lost if intervention were denied, was presented in the court below in either of the petitions which are subjects of the first and third appeals. If the trustee and the receivers act honestly and in good faith, the rights of the appellant are protected. The trustee has important interests committed to him by his cestuis que trustent in the litigation before the court, and the court was right, both as to the trustee and the receivers, in exercising its discretion to protect them from interference in the carrying on of the litigation and the administration of the funds in hand, as attempted by the appellant's petitions for intervention. If the trustee had acted in bad faith, or fraudulently, it was open to the appellant to proceed by original bill, and, if the receivers have been guilty of malfeasance in office, the proper remedy is an application to the court below by the appellant or other party in interest for their removal and the substitution of others." 127 Fed. 21, 22, 62 C. C. A. 43, 44.

The views we thus expressed in dismissing the appeals of Spinks (and from which we see no reason to depart) are applicable in full force to the case now before us, and we think that they are decisive against the present appellant, William C. Bullitt. We might then well end this discussion here. We have, however, attentively examined the grounds of complaint urged by this appellant against the proceedings in the court below, and we are obliged to say that we do not find those complaints, or any of them, to be well founded. The appellant has not disclosed any specific breach of trust by the Land Title & Trust Company, or shown any lack of good faith on the part of the receiver. The appellant's principal contention is that certain claims against promoters and former stockholders of the Asphalt Company of America should have been adjusted by way of set-off in the course of distribu-

Digitized by Google

tion of the fund realized by the Land Title & Trust Company in the foreclosure sale of the pledged assets, instead of being prosecuted in independent suits by the receiver. The so-called foreclosure suit was a proceeding by the trustee the Land Title & Trust Company to have the court which, under the original bill, had appointed a receiver for the Asphalt Company of America, decree the sale of the assets pledged under the agreement of July 15, 1899, and apply the proceeds to the lien held by the trustee. The subsequent proceedings of the court—the reference to a master, order of sale and confirmation thereof, and order of distribution—were orderly steps in the due administration of the trust fund. In all these proceedings the trustee represented the whole body of certificate holders, including, of course, this appellant. The agreement securing the certificates provided that: "All collateral gold certificates executed and delivered by the trustee in accordance with the provisions of this agreement shall be of like status as if all were issued for one consideration, without any preference or priority of one of said collateral gold certificates over another or others." The decree fixing the amount of the outstanding certificates and the decree of distribution were in strict conformity with the terms of the pledge. All the certificates included in said decrees were genuine, and all were executed and delivered in accordance with the provisions of the agreement. In this regard there seems to have been no dispute. The only objection to the distribution urged by the appellant is that alleged claims against such of the certificate holders as were promoters or former stockholders of the Asphalt Company were not adjusted by way of set-off. But, aside from the confusion and delays incident to that course of procedure, there were, it seems to us, unanswerable objections thereto. Some of these we will briefly notice. The alleged counterclaims were unliquidated and inchoate. The liability on stock was not due, for there had been no call by the directors of the company, nor any judicial ascertainment of the amount of the deficiency. Moreover, the general creditors of the company were entitled to participate in unpaid stock subscriptions, and also in any fund arising from liability of promoters. But, manifestly, by the course proposed by the appellant the general creditors would have been excluded in whole or in part from participation in these assets, for the amount of the set-offs established by the proposed method of procedure would have inured in the distribution of this fund to the certificate holders who were not subject to set-off. We think that the court pursued the proper course in directing that the claims against promoters and stockholders should be prosecuted by the receiver by independent actions. It does not appear to us that this method of procedure was at all detrimental to the appellant.

This record discloses that in due time the court below made appropriate orders authorizing and directing the receiver to proceed by suit to enforce the alleged liabilities of promoters and stockholders of the Asphalt Company of America. On the same day the appellant's first petition for intervention was denied the court below made the following order:

"And now, July 6, 1903, the petition and report of Henry Tatnall, receiver of Asphalt Company of America, exhibiting to the court certain facts relat-

Digitized by Google

ing to the organization and promotion of said corporation, having been filed and considered by the court, it is ordered and decreed that the receiver be, and he is hereby, authorized and directed to take such proceedings by action at law, bill in equity, or otherwise as he may be advised, and as he may determine, against the persons mentioned in said report, or any of them, or against any other persons who may appear to him to be liable, to enforce the liability of such persons for profits made by them in the organization and promotion of Asphalt Company of America."

When this order was made the court publicly stated that if the petitioner, Bullitt (who was then and there represented), thought that others were liable for promoter's profits besides those who, in the opinion of the receiver's counsel, were liable, he was at liberty to use the name of the receiver in suits against such persons upon simply indemnifying the receiver against the costs of such suits. It was to this authorization that the judge below referred in the course of his opinion denying the petition of January 8, 1904, when he said:

"It seems to me, in view of the manner in which that decree of July 6th was entered, and the opportunity given to this petitioner especially to come forward and urge the receiver to bring any suit which he might think was legal and proper to be brought, and his failure to do so, that he is not entitled to have that decree opened for any purpose whatever."

On the 22d of December, 1903, the court made an order for the enforcement of the liability of the stockholders of the Asphalt Company of America, whereby a call was made for payment on each share of stock of said company of the sum necessary to complete the amount of such share, and the receiver was directed to collect the amounts thus called from the stockholders of record. And this order contained the following further provisions:

"Ordered, adjudged, and decreed that, if the said receiver shall find himself unable to collect from any stockholder of the Asphalt Company of America the full amount payable pursuant to said call by reason of the insolvency of such stockholder, the said receiver be directed to inquire into the circumstances under which transfer of stock was made to such stockholder, and, if he be of opinion that the amount payable pursuant to said call and not collectible from the stockholder of record constitutes a liability of any former holder of such stock, and that it will be to the advantage of the estate in the receiver's hands for administration to attempt to collect the deficiency from such former stockholder, then and in such case the receiver is hereby directed to employ such legal process and institute such legal proceedings to that end at the expense of the trust estate, with all the powers aforesaid, as he shall be advised by counsel; and it is further ordered, adjudged, and decreed that, if any person interested in the administration of said estate in the hands of the receiver shall file with the receiver a sworn statement in writing of facts purporting to show the liability under said call of any former stockholder of the Asphalt Company of America named in said statement, with a detailed presentation of the evidence available to substantiate said facts, and the names of the witnesses who will prove said facts, and if the receiver, upon consideration thereof, and of such other information in the premises as he can obtain, shall be of opinion that an attempt to enforce such alleged liability by legal proceedings will not be to the advantage of the estate in his hands for administration, he shall give notice in writing of such determination to the person presenting such statement of facts; and thereafter, notwithstanding such determination, if a satisfactory bond of indemnity with sufficient surety or sureties shall be tendered to the said receiver to protect the estate in his hands for administration against any damage or expense by reason of legal proceedings for the enforcement of such alleged liability, the said receiver is hereby directed to employ such legal process and institute such legal pro-

Digitized by Google

ceedings at the expense of the trust estate, with all the powers aforesaid, as may be advised by counsel for the enforcement of such alleged liability; the court reserving the right, however, at any time by order, after notice to the receiver and to the person furnishing such bond of indemnity, to prohibit the institution of any such proceeding which shall appear to be oppressive in character, or without probable cause, or from time to time in any case to require additional or other security."

We do not perceive that the orders of July 6 and December 22, 1903, are open to criticism. They seem to us to scrupulously guard the interests of the appellant.

We do not deem it necessary to discuss with particularity all the alleged errors specified by the appellant. We here content ourselves with saying that we are not able to see that the appellant has any just cause of complaint in respect to the proceedings in the court below.

Each of these appeals must be dismissed.

(132 Fed. 310.)

REX BUGGY CO. et al. v. HEARICK et al.

(Circuit Court of Appeals, Eighth Circuit. August 22, 1904.)

No. 2,051.

1. BANKRUPTCY—ACTS OF BANKRUPTCY—PREFERRING CREDITORS.

A merchant, hopelessly insolvent, who within four months prior to the filing of an involuntary petition in bankruptcy against him, and with knowledge of such condition of insolvency, pays substantial sums of money to certain of his creditors in full satisfaction of their claims, while refusing payment to others whose claims are due and equally entitled to payment, commits an act of bankruptcy by making a transfer of property with intent to prefer creditors within Bankr. Act July 1, 1898, c. 541, § 3a (2), 30 Stat. 546 [U. S. Comp. St. 1901, p. 3422], being presumed to have intended the necessary result of his acts.

Appeal from the District Court of the United States for the District of Kansas.

This is an appeal by creditors from an order dismissing their petition and refusing to adjudge the appellees bankrupts. The acts of bankruptcy charged are that the defendants, while insolvent, transferred portions of their property to some of their creditors, with intent to prefer such creditors over others. Bankr. Act July 1, 1898, c. 541, § 3, subd. "a," cl. 2, 30 Stat. 546 [U. S. Comp. St. 1901, p. 3422]. The cause was tried upon an agreed statement of facts, from which it appears without dispute that the appellees were engaged in a mercantile business; that during the four months preceding the filing of the petition they were insolvent, their debts being about $10,000 and the value of their assets never exceeding $4,000; that they knew of their insolvent condition; that during such period they paid to certain of their creditors substantial sums of money, some of them being paid in full, while they denied to others whose claims were due any payments whatever; that some of the payments were made under threats of suit, while others were made voluntarily. The statement of facts contains no denial of an intent to prefer the creditors whose demands were paid. The petition is general and indefinite in its allegations, but no attack was made upon it in the District Court, the cause having been submitted and determined upon its merits.

George E. Stoker, for appellants.

William F. Schoch and W. A. S. Bird, for appellees.

Digitized by Google

Before SANBORN and HOOK, Circuit Judges, and AMIDON, District Judge.

HOOK, Circuit Judge, after stating the case as above, delivered the opinion of the court.

If a merchant is hopelessly insolvent during the four months preceding the filing of a petition in involuntary bankruptcy against him, and with knowledge of such condition of insolvency pays to certain of his creditors substantial sums of money in full satisfaction of their claims, and denies payment to others whose claims are due and equally entitled to payment, he has committed an act of bankruptcy within the meaning of section 3, subd. "a," cl. 2, Bankr. Act July 1, 1898, c. 541, 30 Stat. 546 [U. S. Comp. St. 1901, p. 3422]. His payments under such circumstances inevitably result in giving the creditors so favored a preference over the others. The debtor is presumed to intend the necessary results of his own intelligent acts. This doctrine is abundantly supported by authority (Johnson v. Wald, 93 Fed. 640, 35 C. C. A. 522; Bloch v. Farjieon, 109 Fed. 790, 48 C. C. A. 650; In re Rome Planing Mill [D. C.] 96 Fed. 812; In re Grant [D. C.] 106 Fed. 496; In re Gilbert [D. C.] 112 Fed. 951; under the similar provisions of section 35, Act March 2, 1867, c. 176, 14 Stat. 534; Toof v. Martin, 13 Wall. 40, 20 L. Ed. 481; Wager v. Hall, 16 Wall. 584, 21 L. Ed. 504; Farrin v. Crawford, Fed. Cas. No. 4,686; In re Merchants' Insurance Co., Fed. Cas. No. 9,441), and is decisive of this case.

The order of the District Court will be reversed, and the cause remanded, with directions to enter an order adjudging the appellees to be bankrupts.

(132 Fed. 456.)

THURINGIA INS. CO. OF ERFURT, GERMANY, v. GOLDSMITH.

(Circuit Court of Appeals, Eighth Circuit. August 24, 1904.)

No. 1,909.

1. INSURANCE ON MOVABLE PROPERTY—TRANSFER OF POLICY TO PROPERTY IN NEW LOCATION—ACTS OF AGENTS AFTER LOSS.

Where a clerk in the office of a firm of insurance agents, in the name of the firm and by indorsement upon a policy insuring a stock of merchandise against loss or damage by fire while located in a designated building, transferred the insurance to the same property in another location, where it was subsequently damaged by fire, acts and conversations of the agents, occurring after the fire and persuasively tending to show that they respected the transfer and treated it as obligatory, were competent and substantial evidence upon the issue whether the clerk had general authority from the agents to make such transfers, or, if not, whether this transfer was known to and approved by them before the fire, and justified the submission of that issue to the jury.

In Error to the Circuit Court of the United States for the District of Nebraska.

H. C. Brome and A. H. Burnett, for plaintiff in error.

R. S. Hall, J. H. McCulloch, and J. J. O'Connor, for defendant in error.

Digitized by Google

Before SANBORN and VAN DEVANTER, Circuit Judges, and SHIRAS, District Judge.

VAN DEVANTER, Circuit Judge. This was an action by Goldsmith to recover upon a policy insuring him against loss or damage by fire to a stock of merchandise while located in a designated building. The question tried was whether the agents of the insurance company had by indorsement upon the policy transferred the insurance to the same property in another location. A judgment for defendant upon a directed verdict was heretofore reversed because in the opinion of this court there was sufficient evidence of a transfer to require the submission of the question to the jury. Goldsmith v. Thuringia Insurance Co., 52 C. C. A. 534, 114 Fed. 914. A second trial resulted in a verdict and judgment for plaintiff, and the case is now here upon an exception to the court's charge, which, in effect, instructed the jury that a transfer indorsed upon the policy before the loss by Miss Dunn, a clerk for Brennan, Love & Co., agents for the insurance company, was binding upon the company if she had authority from the agents to make such transfers, and made this indorsement intending it to be operative at the time, or if her indorsement of a transfer upon this policy was known to the agents and approved by them before the loss. It is complained that there was no evidence that Miss Dunn had authority from the agents to make such transfers, and that the jury should have been restricted to determining whether before the loss the agents were aware of, and approved, what was done by Miss Dunn in this instance. That the company was bound by her indorsement if she was acting under general or specific authority from the agents cannot be questioned, in the presence of the evidence otherwise showing her relation to the insurance business transacted by these agents. Comp. St. Neb. 1901, cc. 16, 43, §§ 1683, 3436; N. Y. Life Ins. Co. v. Russell, 23 C. C. A. 43, 77 Fed. 94; Pollock v. German Fire Ins. Co. (Mich.) 86 N. W. 1017.

The fire occurred May 25, 1898, shortly after 6 o'clock in the evening. The stock of merchandise had been removed from the location designated in the policy to another two or three days before. A. J. Love, of Brennan, Love & Co., saw the merchandise being removed, and then told the insured's agent that the insurance would not be transferred to the merchandise in the new location. On the morning of the 25th, after the removal was completed, the insured's agent sent the policy to Brennan, Love & Co.'s office by a messenger, with the request that the insurance be transferred by indorsement upon the policy. Mr. Love was absent, and Miss Dunn, who was apparently in charge of the office, listened to the request, and received and retained the policy. The messenger testified that she said he would have to leave the policy, as no one was there at the time to sign a transfer. Miss Dunn testified that she told the messenger she would rather see Mr. Love before anything was done about the transfer. Later in the day, and before the fire, the transfer so requested was indorsed upon the policy by Miss

Digitized by Google

Dunn in the name of Brennan, Love & Co. The policy was then placed in a basket on the top of her desk, and the next morning, when it was called for by the same messenger, it was handed to him by an office boy. Miss Dunn and all the members of Brennan, Love & Co. were absent at the time. Miss Dunn testified that she did not refer the matter of making this transfer to Mr. Love or any member of the firm, and "I had signed removal slips before, but referred them to Mr. Love; if Mr. Love said it was all right, I would attach the signature of the firm. It may have happened sometimes that I attached the signature of the firm to removal slips without speaking to Mr. Love about it, if any one wanted anything on the moment, and I knew about it, and knew it was all right; but it was very seldom I did. I generally left these things for Mr. Love; but when anything happened, I sometimes did it, and I signed it in this case, but I did not relinquish the policy." Thomas Brennan, one of the partners in Brennan, Love & Co., testified:

"Mr. Shields and Miss Dunn attend to the insurance business. Mr. Shields has no authority over Miss Dunn; he is a solicitor. Miss Dunn attends to the insurance business when Mr. Love is absent. Miss Dunn consults with Mr. Shields about the insurance in Mr. Love's absence, but she might transact it without consulting him. * * * I signed policies, but did not place the insurance; determined nothing about the risk, simply signed what was handed me, and Miss Dunn did the rest."

Love testified that he first learned about the indorsement of a transfer upon the policy the next morning after the fire. That morning he went to the plaintiff's new location, had a short interview with him about the fire, said nothing about the transfer of the insurance being unauthorized, and, in answer to plaintiff's request for an early settlement of the loss, said he would send an adjuster around. Later, and during the forenoon of that day, Brennan, Love & Co. sent to plaintiff written notice that the policy would be canceled at 12 o'clock noon, "subject to a loss which occurred at 6:18 p. m. yesterday," and saying:

"For any fire which might occur from 12 o'clock this day, this company will not in any way be liable. We give you this notice that you may have ample time to secure other insurance to-day if you so desire."

An adjuster was sent by Love to investigate the extent of the loss, and during the course of that investigation Love had another interview with plaintiff about the matter, but said nothing about the transfer of the insurance being unauthorized. There was testimony tending to show that Miss Dunn was without authority to make such transfers, and that her indorsement upon this policy was not authorized or approved. The terms of the policy were such that the insurance covered the merchandise only while it remained in the old location. The policy afforded plaintiff no protection, and subjected defendant to no responsibility, at the time of the fire, unless before that time the insurance had been transferred to the merchandise in the new location. The situation when the fire occurred was the criterion by which to determine the relation and rights of the parties. Nothing which the agents or Love

Digitized by Google

did or said after the fire could change the relation or rights of the parties at the time of the fire. All this was carefully and plainly stated in the court's charge, and the jury were told that evidence of the acts of the agents and of their interviews with plaintiff after the fire had been admitted only for the purpose of enabling the jury to determine therefrom, as well as from the testimony of the agents and others, whether when Miss Dunn indorsed the transfer upon the policy she was authorized to make such transfers and made this indorsement intending that it should be operative at the time, or, if not so authorized at the time, whether what she did was known to the agents and approved by them before the fire.

There was no error in the charge. When the case was here before, it was held that Miss Dunn's indorsement upon the policy and the conduct of the agents which we have recited were competent and persuasive evidence on the issue whether the agents were aware of and approved the transfer before the fire. They were equally competent and persuasive evidence that she was then authorized to make such transfers without the agents' knowledge or approval of each transaction. The evidence was competent and persuasive, because it tended to show that her act was respected by, and was treated as obligatory upon, those for whom it was apparently performed, and not because it tended to disclose the manner in which it became obligatory. If her act was unauthorized when done, and was without approval at the time of the fire, then the subsequent acts of the agents and their interviews with plaintiff were at variance with the common experience of men. Those acts and interviews, coupled with Miss Dunn's virtual admission, when testifying for defendant, that she was accustomed to make such transfers when necessity therefor arose, and with the testimony of Brennan, one of the agents, that in Love's absence Miss Dunn attended to their insurance business, and exercised the controlling judgment therein, constituted substantial evidence that she had authority from the agents to make transfers of insurance like the one in controversy, and required that the question of her authority and of her intent in making the indorsement be submitted to the jury.

The judgment is affirmed.

END OF CASES IN VOL. 65.

Digitized by Google

INDEX.

ABANDONMENT.

Of appeal or writ of error, see "Appeal and Error," § 8.
Of mining lease, see "Mines and Minerals," § 2.

ABATEMENT AND REVIVAL.

Election of remedy, see "Election of Remedies," § 1.

§ 1. **Death of party and revival of action.**

An action by depositors against directors of an insolvent national bank to recover damages for breach of the directors' implied contract to see that the bank's assets were used in the manner prescribed by the national bank act is an action on contract, and survives against representatives of deceased directors.

—Boyd v. Schneider, 131 Fed. 223.....65 C. C. A. 209

ABUTTING OWNERS.

Assessments for expenses of public improvements, see "Municipal Corporations," § 1.

ACCEPTANCE.

Of security on appeal, see "Appeal and Error," § 5.

ACCESSION.

Intermixture of goods of same kind, see "Confusion of Goods."

ACCOUNT.

See "Account Stated."

ACCOUNT STATED.

An account stated, conceded to disclose some just indebtedness received and retained by the debtor without objection for an unreasonable time, estops him, in the absence of fraud or mistake, from denying his liability for all the items it contains, and raises the legal presumption of his promise to pay the balance. A consideration and legal liability for each item outside of the stated account is not essential to sustain a cause of action to recover its balance. The balance is one debt, regardless of the items, and a consideration for that debt is sufficient.

—Patillo v. Allen-West Commission Co., 131 Fed. 680..65 C. C. A. 508

Digitized by Google

ACKNOWLEDGMENT.

Operation and effect of admissions as evidence, see "Evidence," § 2.
Stamp tax on certificate of acknowledgment, see "Internal Revenue."

§ 1. **Taking and certificate.**
Under Civ. Code Mont. §§ 1606, 1609, 1611, providing that acknowledgments by married women to instruments purporting to be executed by them must be taken in the same manner as that of any other person, and shall be that she "executed the same," a notary, in taking a married woman's acknowledgment to a declaration of homestead, required by section 1700, does not act as a judicial officer.
—Sackett v. McCaffrey, 131 Fed. 219.....65 C. C. A. 205

ACTION.

Abatement, see "Abatement and Revival."
Bar by former adjudication, see "Judgment," § 2.
Commencement within period of limitation, see "Limitation of Actions," § 2.
Election of remedy, see "Election of Remedies."
Jurisdiction of courts, see "Courts."
Limitation by statute, see "Limitation of Actions."
Proceedings for deportation of aliens, see "Aliens," § 1.

Actions between parties in particular relations.

See "Master and Servant," § 5.

Actions by or against particular classes of parties.

See "Aliens," § 1; "Carriers," § 2; "United States," § 1.
Directors of national bank, see "Banks and Banking," § 3.

Particular causes or grounds of action.

See "Collision," § 5; "Forcible Entry and Detainer," § 1; "Insurance," § 9; "Negligence," §§ 1, 2; "Trespass"; "Trover and Conversion," § 1.
Breach of contract, see "Sales," §§ 2, 3.
Freight, see "Shipping," § 1.
Infringement of patent, see "Patents," § 3.
Injury to tow, see "Towage."
Loss of or injury to goods shipped, see "Shipping," § 1.
Personal injuries, see "Carriers," § 2; "Master and Servant," § 5; "Railroads," § 2.
Price of goods, see "Sales," § 2.
Subscriptions to corporate stock, see "Corporations," § 2.
Unfair competition in trade, see "Trade-Marks and Trade-Names," § 1.

Particular forms of action.

See "Trespass," § 1; "Trover and Conversion."

Particular forms of special relief.

See "Injunction"; "Specific Performance."
Foreclosure of mortgage, see "Railroads," § 1.
Setting aside fraudulent conveyance, see "Fraudulent Conveyances," § 1.
Setting aside railroad mortgage bonds, see "Railroads," § 1.

Particular proceedings in actions.

See "Costs"; "Damages"; "Dismissal and Nonsuit"; "Evidence"; "Judgment"; "Jury"; "Limitation of Actions"; "Removal of Causes"; "Trial."
Verdict, see "Trial," § 3.

Digitized by Google

Particular remedies in or incident to actions.

See "Injunction."

Proceedings in exercise of special jurisdictions.

Criminal prosecutions, see "Criminal Law."
Suits in admiralty, see "Admiralty"; "Collision," § 5.
Suits in equity, see "Equity."

Review of proceedings.

See "Appeal and Error."

ACTION ON THE CASE.

See "Trespass," § 1.

ADEQUATE REMEDY AT LAW.

Effect on jurisdiction of equity of suit for infringement of patent, see "Patents," § 3.

ADJUDICATION.

Operation and effect of former adjudication, see "Judgment," §§ 2, 3.

ADMINISTRATION.

Of estate of bankrupt, see "Bankruptcy," § 2.

ADMIRALTY.

See "Collision"; "Maritime Liens"; "Seamen"; "Shipping"; "Towage."

§ 1. Hearing or trial, and decision.

The allowance of interest on an adjustment of conflicting claims in admiralty is discretionary with the court.
—The Eliza Lines, 132 Fed. 242.....65 C. C. A. 538

§ 2. Decree and enforcement thereof.

One who acted as agent for a party in obtaining an erroneous judgment directing the sale of a cargo, but who was not a party to the record, and had no personal interest in the suit, cannot be held liable in damages as a tort feasor on account of the sale.
—The Eliza Lines, 132 Fed. 242.....65 C. C. A. 538

§ 3. Appeal.

Where a computation made by a commissioner in admiralty contains a plain error, which was called to the attention of the court, it may be corrected in the appellate court, although no formal exception was taken on that ground to the commissioner's report.
—The Eliza Lines, 132 Fed. 242.....65 C. C. A. 538

Where, in an action for damages for collision at sea, the trial judge had the opportunity of seeing the witnesses and determining their credibility from their manner and appearance, his decision will not be reversed on appeal unless it clearly appears to be contrary to the evidence.
—Jameson v. Lewis, 131 Fed. 728.....65 C. C. A. 586

Digitized by Google

ADMISSIONS.

As evidence in civil actions, see "Evidence," § 2.

ADVERSE POSSESSION.

See "Limitation of Actions."

AFFREIGHTMENT.

Contracts, see "Shipping," § 1.

AGENCY.

See "Principal and Agent."

AGREEMENT.

See "Contracts."

AGRICULTURE.

Irrigation, see "Waters and Water Courses," § 1.

ALIENS.

See "Citizens"; "Indians."
Laws for deportation of as deprivation of due process of law, see "Constitutional Law," § 2.

§ 1. Exclusion or expulsion.
In proceedings for the deportation of a Chinaman, the fact that he was permitted to live in the United States for 19 years without molestation was insufficient to raise a presumption that his arrival antedated the date on which the exclusion act (Act May 6, 1882, c. 126, 22 Stat. 58, as amended by Act July 5, 1884, c. 220, 23 Stat. 115 [U. S. Comp. St. 1901, p. 1305]), went into effect, he never having registered as a laborer or merchant as required by law.
—United States v. Ah Chung, 130 Fed. 885.....65 C. C. A. 563

AMENDMENT.

Of corporate charter, see "Corporations," § 1.
Of pleading, after expiration of period of limitations, see "Limitation of Actions," § 2.
Of statute, see "Statutes," § 1.

ANIMALS.

Applicability of doctrine of confusion of goods to, see "Confusion of Goods."
Issuance of cattle to Indians for stock-raising purposes, see "Indians."

ANTICIPATION.

Of invention, see "Patents," §§ 1, 2.

Digitized by Google

APPEAL AND ERROR.

Costs, see "Costs," § 2.
Review in bankruptcy proceedings, see "Bankruptcy," § 4.
Review in criminal prosecutions, see "Criminal Law," § 1.
Review of proceedings in admiralty, see "Admiralty," § 8.

§ 1. Nature and form of remedy.

The practice of taking an appeal and a writ of error to review the same adjudication is not only permissible, but commendable, in cases in which counsel have just reason to doubt which is the proper proceeding to give jurisdiction to the appellate court.

—Lockman v. Lang, 132 Fed. 1.....65 C. C. A. 621

§ 2. Nature and grounds of appellate jurisdiction.

A decree affirming an order of a municipal body fixing maximum rates to be charged by an irrigation company for water furnished consumers during a certain year may be reviewed on appeal, although the year has expired, where, under the statute, such rate continues until changed, or where some question of law is involved, the decision of which may affect the future action of the authorities.

—Boise City Irrigation & Land Co. v. Clark, 131 Fed. 415..... 65 C. C. A. 399

An appeal is a matter of right.

—Lockman v. Lang, 132 Fed. 1.....65 C. C. A. 621

§ 3. Decisions reviewable.

Act March 3, 1891, § 7, as amended by Act June 6, 1900, c. 803, 31 Stat. 660 [U. S. Comp. St. 1901, p. 551], provides that where, on a hearing in equity in a district or circuit court, an injunction shall be granted or continued by an interlocutory order or decree in a case in which an appeal from a final decree may be taken to the Circuit Court of Appeals, an appeal may be taken from such interlocutory order or decree granting or continuing such injunction to the Circuit Court of Appeals. *Held*, that, where a temporary injunction was dissolved on a demurrer to the bill being sustained, plaintiff was not entitled to an appeal from so much of the order only as dissolved the injunction.

—Frye & Bruhn v. Carstens, 130 Fed. 766.....65 C. C. A. 192

Where a bill in equity was dismissed, and an order entered discharging a receiver and providing for the payment of costs, every question having been disposed of in so far as the trial court was concerned, it was a final decree, and therefore appealable.

—Viquesney v. Allen, 131 Fed. 21.....65 C. C. A. 259

The case coming on to be heard on plaintiffs' demurrer to defendant's return in a mandamus proceeding, the court made an order, and plaintiffs excepted to so much of it as ordered the appointment of a collector of taxes without first ordering the removal of the sheriff. Thereafter plaintiffs filed a reply to defendant's return, and the court required defendant to file a rejoinder in a certain time. *Held*, that the court had allowed further pleading, so that its order, which would have become final had plaintiffs stood by their demurrer, was not a final determination authorizing a writ of error.

—Jabine v. Sparks, 131 Fed. 440.....65 C. C. A. 424

The rule that a decree or judgment for costs alone is not reviewable applies only to cases in equity or admiralty, in which the awarding of costs is not, generally speaking, a matter of strict right, but is largely a matter of discretion. In an action at law in a federal Circuit Court, where, except in the few instances, otherwise provided by statute, the prevailing party is entitled to costs as a matter of positive right, a judgment rendered on dismissal denying such right may be reviewed by writ of error.

—Western Coal & Mining Co. v. Petty, 132 Fed. 603..65 C. C. A. 667

Digitized by Google

An order denying the petition of a bondholder for leave to intervene in a foreclosure suit brought by the mortgage trustee as representing all the bondholders *held* discretionary, and not appealable. Land Title & Trust Co. v. Asphalt Co. of America (C. C. A.) 127 Fed. 1, followed.
—Land Title & Trust Co. v. Tatnall, 132 Fed. 305....65 C. C. A. 671

§ 4. Presentation and reservation in lower court of grounds of review.

Where, in an action for wrongful death of a switchman by reason of an alleged defective coupler attached to a car used in moving traffic, defendant offered no objection to evidence which, without conflict, established the interstate character of the commerce in which defendant was engaged and of the traffic being moved by the car in question, and in excepting to the instructions applying Act March 2, 1893, c. 196, 27 Stat. 531 [U. S. Comp. St. 1901, p. 3174], to the case, defendant did not place its exceptions on the ground that the petition did not state a case arising within interstate commerce, such objection was not available on appeal.
—Chicago, M. & St. P. Ry. Co. v. Voelker, 129 Fed. 522.....
65 C. C. A. 226

§ 5. Effect of transfer of cause or proceedings therefor.

The jurisdiction of the case is transferred to the appellate court by the acceptance by the proper court or judge of security upon the appeal within the time fixed by the statute.
—Lockman v. Lang, 132 Fed. 1.....65 C. C. A. 621

§ 6. Record and proceedings not in record.

Where the Circuit Court, as authorized by Court Rule 14, subd. 4 (91 Fed. vii, 32 C. C. A. lxxxix), transmitted to the Circuit Court of Appeals an original document admitted in evidence over objection that it was not stamped, it was immaterial that the copy of the document contained in the record did not show either that the document or the certificate of acknowledgment indorsed thereon by a notary public was not stamped.
—Sackett v. McCaffrey, 131 Fed. 219.....65 C. C. A. 205

§ 7. Assignment of errors.

An assignment of error that the verdict is contrary to law is too general to be considered.
—Chicago Terminal Transfer R. Co. v. Bomberger, 130 Fed. 884.....
65 C. C. A. 64

Where in proceedings by appeal and by writ of error to review the same rulings the alleged errors are the same in both proceedings, the filing of a single assignment of errors accomplishes the purpose of rule 11, and is sufficient to sustain the proceeding requisite to obtain the review.
—Lockman v. Lang, 132 Fed. 1.....65 C. C. A. 621

An allowance of an appeal on condition that the petitioner give a bond in a fixed amount does not become effective until the bond is given and accepted, and the filing of an assignment of errors before or at the time of the approval of the bond is a filing within the time prescribed by the rule.
—Lockman v. Lang, 132 Fed. 1.....65 C. C. A. 621

The filing of an assignment of errors before or at the time of the allowance of an appeal is indispensable under the eleventh rule of the Circuit Courts of Appeals (91 Fed. vi, 32 C. C. A. lxxxviii), and the appeal will be dismissed if the assignment is not thus filed.
—Lockman v. Lang, 132 Fed. 1.....65 C. C. A. 621

§ 8. Dismissal, withdrawal, or abandonment.

A citation is not jurisdictional. Where an appeal has been allowed by the taking of security within the statutory time, and the transcript of the record has been filed and the case has been docketed at the proper term of the appellate court, the failure to issue a citation within the time prescribed for the appeal does not detract from the jurisdiction of the review.

Digitized by Google

ing court, or furnish ground for a dismissal of the appeal, but the appellate court will grant an opportunity to issue and serve a citation.
—Lockman v. Lang, 132 Fed. 1.....65 C. C. A. 621

§ 9. Review.

Remarks of the court in its charge to the jury with respect to the conduct of the case by counsel *held*, while improper, not to have constituted prejudicial error.
—McKnight v. United States, 130 Fed. 659.....65 C. C. A. 37

In an action for breach of contract the erroneous admission of irrelevant evidence respecting certain profits sued for was cured by a positive instruction directing the jury not to consider it.
—Lazier Gas Engine Co. v. Du Bois, 130 Fed. 834....65 C. C. A. 172

Neither the verdict of a jury nor the exercise of the trial court's discretion in refusing a new trial may be reviewed on appeal to the Circuit Court of Appeals unless the court's discretion in denying a new trial was abused.
—Lazier Gas Engine Co. v. Du Bois, 130 Fed. 834....65 C. C. A. 172

The opinion of a trial judge on conflicting evidence will be presumed correct on appeal.
—Burns v. Burns, 131 Fed. 238.....65 C. C. A. 224

Where a decree dismissing a bill is general, all defenses pleaded are open to the defendant on appeal, although one only may have been sustained by the trial court in its opinion.
—American Tube Works v. Bridgewater Iron Co., 132 Fed. 16.....
65 C. C. A. 636

§ 10. Determination and disposition of cause.

A judgment for defendant entered on a verdict directed by the court will not be reversed because plaintiff may have been entitled to nominal damages, where no permanent right is affected.
—United States v. Withers, 130 Fed. 696.....65 C. C. A. 16

The failure of the court, on the separation of the jury for a noon recess during a trial, to admonish them against conversing about the case or forming an opinion thereon, as required by a statutory provision, is not a material error, where the admonition had been given on their previous separations during the same trial.
—McKnight v. United States, 130 Fed. 659.....65 C. C. A. 37

An appellate court of the United States will rarely reverse a decree in equity on the sole ground that the bill was multifarious, and it will not do so where the causes of action joined are not repugnant or inconsistent with each other, and where the only loss or inconvenience to a defendant from such joinder arises from his having been subjected to the payment of costs with which he is not justly chargeable, which can be remedied by a modification of the decree.
—Hosmer v. Wyoming Ry. & Iron Co., 129 Fed. 883....65 C. C. A. 81

Under the mandate of a Circuit Court of Appeals directing a new trial the entry of judgment upon the pleadings without taking testimony may properly be directed by the trial court. If the pleadings present such a state of conceded facts as to entitle either party to a judgment, the action of the trial court in making proper disposition of the case, after hearing the argument, is itself a trial.
—Dodge v. United States, 131 Fed. 849.....65 C. C. A. 603

APPLIANCES.

Liability of employer for defects, see "Master and Servant," § 1.

Digitized by Google

APPRAISAL.

Of merchandise subject to duty, see "Customs Duties," § 2.

ASSESSMENT.

Of expenses of public improvements, see "Municipal Corporations," § 1.

ASSIGNMENT OF ERRORS.

See "Appeal and Error," § 7; "Criminal Law," § 1.

ASSIGNMENTS.

Adoption by federal courts of state laws as rules of decision relating to, see "Courts," § 1.
Fraud as to creditors, see "Fraudulent Conveyances."
Insurance policy, see "Insurance," § 2.

§ 1. Requisites and validity.

A contractor for a city building, to whom money was due from the city, presented an order to the comptroller, requesting him to issue a warrant for a specified sum in favor of a bank, which order the comptroller, by an indorsement thereon, accepted, to be paid when the architect's certificate should be filed. The next day the contractor delivered the order to the bank, which advanced him money thereon. *Held*, that the accepted order, on its delivery, operated not merely as an equitable assignment of so much of the fund as was covered thereby, but as a transfer of the legal title thereto to the payee, creating a direct indebtedness from the city to the bank as of the date of the acceptance; that no further notice to the city than was involved in the presentation and acceptance of the order was required.

—Third Nat. Bank v. Atlantic City, 130 Fed. 751....65 C. C. A. 177

ASSUMPTION.

Of risk by employé, see "Master and Servant," §§ 3, 5.

ATTACHMENT.

Liability of sheriff for wrongful levy, see "Sheriffs and Constables," § 1.

ATTORNEY AND CLIENT.

Attorneys in fact, see "Principal and Agent."
Compensation of attorney for bankrupt, see "Bankruptcy," § 2.

AUTHORITY.

Of agent, see "Principal and Agent," § 1.

Digitized by Google

BANKRUPTCY.

§ 1. Petition, adjudication, warrant, and custody of property.

In determining the question whether a transfer by an insolvent manufacturing corporation of the greater part of its business and property to another corporation, organized largely by the same persons, in exchange for the stock and bonds of the latter, was made in good faith, or with intent to hinder, delay, or defraud its creditors, so as to constitute an act of bankruptcy, under Bankr. Act July 1, 1898, c. 541, § 3, cl. "a," subd. 1, 30 Stat. 546 [U. S. Comp. St. 1901, p. 3422], the jury may properly take into consideration the natural and necessary result of the transfer, and may infer the intent therefrom.

—Bean-Chamberlain Mfg. Co. v. Standard Spoke & Nipple Co., 131 Fed. 215 .....65 C. C. A. 201

On the hearing of an involuntary bankruptcy petition, where the appointment of a receiver by the state court was claimed to constitute the act of bankruptcy charged, questions submitted to the jury as to whether on the date the receivers were appointed, and at the date of filing the bankruptcy petition, the aggregate of the property of the alleged bankrupt, at a fair valuation, was sufficient to pay its debts; whether, because of the insolvency of the alleged bankrupt, receivers were put in charge of its property under the state laws; and whether such receivers took charge and possession of the property, and have since so remained—were proper.

—Blue Mountain Iron & Steel Co. v. Portner, 131 Fed. 57..... 65 C. C. A. 295

On an issue as to whether defendant had committed an act of bankruptcy by reason of the appointment of receivers to administer its assets in a state court, the record was admissible to show the appointment of such receivers, and that they were appointed because of defendants' insolvency.

—Blue Mountain Iron & Steel Co. v. Portner, 131 Fed. 57..... 65 C. C. A. 295

Where it was claimed that a state court had no jurisdiction to appoint receivers for an alleged bankrupt corporation, for the reason that, prior to the filing of the bill under which the appointment was made, another bill was filed in another court for the same purpose, but it appeared that the prior proceeding was collusive, and that nothing was done or intended to be done therein except to file the bill, such proceeding was ineffective to prevent the appointment of receivers in the subsequent suit constituting an act of bankruptcy.

—Blue Mountain Iron & Steel Co. v. Portner, 131 Fed. 57..... 65 C. C. A. 295

Under Bankr. Act 1898, as amended by Act Feb. 5, 1903, c. 487, 32 Stat. 797 [U. S. Comp. St. Supp. 1903, p. 410], declaring that the appointment of a receiver for an alleged bankrupt, while insolvent, shall constitute an act of bankruptcy, it was immaterial that receivers appointed for an alleged bankrupt corporation were temporary, and not permanent.

—Blue Mountain Iron & Steel Co. v. Portner, 131 Fed. 57..... 65 C. C. A. 295

A subsequent proceeding in bankruptcy for the sole purpose of obtaining a discharge which a prior proceeding has conclusively determined that the bankrupt is not entitled to presents no ground for relief, is vexatious and futile, and cannot be lawfully maintained.

—Kuntz v. Young, 131 Fed. 719.....65 C. C. A. 477

The District Court has power to dismiss such a proceeding, as soon as it learns its real purpose, under section 2, subd. 15, Bankr. Act July 1, 1898, c. 541, 30 Stat. 546 [U. S. Comp. St. 1901, p. 3421], although this is after an adjudication in bankruptcy.

—Kuntz v. Young, 131 Fed. 719.....65 C. C. A. 477

Digitized by Google

An alleged bankrupt has a right to a reasonable time to answer petitions for his adjudication. A single day is not a reasonable time for an alleged bankrupt, who is not within the district, to answer an amended petition, which for the first time charges him with certain acts of fraud and bankruptcy.

—Lockman v. Lang, 132 Fed. 1.....65 C. C. A. 621

A mortgage made by an insolvent, and recorded within four months prior to the filing of a petition in bankruptcy against him, if given with intent to prefer a creditor, constitutes an act of bankruptcy.

—In re Edelman, 130 Fed. 700.....65 C. C. A. 665

A merchant, hopelessly insolvent, who within four months prior to the filing of an involuntary petition in bankruptcy against him, and with knowledge of such condition of insolvency, pays substantial sums of money to certain of his creditors in full satisfaction of their claims, while refusing payment to others whose claims are due and equally entitled to payment, commits an act of bankruptcy by making a transfer of property with intent to prefer creditors within Bankr. Act July 1, 1898, c. 541, § 3a (2), 30 Stat. 546 [U. S. Comp. St. 1901, p. 3422], being presumed to have intended the necessary result of his acts.

—Rex Buggy Co. v. Hearick, 132 Fed. 310.....65 C. C. A. 676

§ 2. Assignment, administration, and distribution of bankrupt's estate.

Bankr. Act July 1, 1898, c. 541, § 60d, 30 Stat. 562 [U. S. Comp. St. 1901, p. 3446], provides that if a debtor shall, directly or indirectly, in contemplation of bankruptcy, pay money or transfer property to an attorney, solicitor in equity, or proctor in admiralty, for services to be rendered, the transaction shall be examined by the court on petition of the trustee for creditors, and shall only be valid to the extent of a reasonable amount, to be determined by the court, and the excess may be recovered by the trustee for the benefit of the estate. Section 64b, 30 Stat. 563 [U. S. Comp. St. 1901, p. 3447], provides for an allowance for attorney's services rendered to the bankrupt in assisting him while performing the duties imposed by the act. *Held*, that section 60d was limited to the allowance of reasonable compensation to attorneys for services rendered to the bankrupt prior to the commencement of the bankruptcy proceedings, and did not cover services rendered in resisting the creditor's petition for an adjudication of bankruptcy.

—Pratt v. Bothe, 130 Fed. 670.....65 C. C. A. 48

Bankr. Act, § 23a (Act July 1, 1898, c. 541, 30 Stat. 552, 553 [U. S. Comp. St. 1901, p. 3431]), providing that suits may be prosecuted in the federal or state courts to determine adverse claims to the property of the bankrupt, and section 23b, providing that suits by a trustee in bankruptcy shall only be brought or prosecuted in the courts where the bankrupt whose estate is being administered by such trustee might have brought or prosecuted them if proceedings in bankruptcy had not been instituted, unless by consent of the proposed defendant, relate only to suits brought by trustees in bankruptcy, and do not authorize the maintenance of a bill by a simple-contract creditor to set aside alleged fraudulent conveyances in aid of a bankruptcy proceeding against the grantor.

—Viquesney v. Allen, 131 Fed. 21.....65 C. C. A. 259

A loan made by a wife to her husband from her separate estate is provable as a debt against his estate in bankruptcy without regard to its enforceability under the law of the state, the contract being valid in equity, by the principles of which courts of bankruptcy are governed; and there is no distinction in such respect between an estate to the wife's separate use, as known to the chancery courts, and a separate estate created by statute.

—James v. Gray, 131 Fed. 401; In re James, Id.....65 C. C. A. 385

A partnership agreement provided that the incoming partner should pay $2,500 in cash, and execute to the other partner, who had an established business, notes for the remainder of the purchase price of a half interest

Digitized by Google

in the business, to be determined by an inventory thereafter to be taken. The original partner took sole charge of the financial and accounting part of the business. The inventory was not taken, and the notes were not executed, but the parties continued to do business as partners on an equal basis. The original partner represented to the incoming partner that his indebtedness only amounted to about $10,000, when in fact it exceeded $30,000; and shortly thereafter he borrowed $10,000 from defendant bank, which he represented to his partner was for the firm's benefit, but which he in fact paid on his personal indebtedness to complainant bank, and thereafter, without his partner's knowledge, executed two notes to complainant in renewal of other notes, a part of his personal indebtedness. *Held*, that the incoming partner did not agree to assume any part of the indebtedness of the old firm, and that the notes so renewed were not chargeable against the new firm's assets in bankruptcy.

—First Nat. Bank v. State Nat. Bank, 131 Fed. 422; In re McIntire, Id.....65 C. C. A. 406

Where a bank had knowledge of facts putting it on inquiry as to whether a member of a firm largely indebted to the bank was authorized to execute notes in the firm name to secure such pre-existing indebtedness, the bank was not entitled to prove such notes as against the firm's assets, in the absence of such authority, notwithstanding the partner executing the notes had implied power, as a member of an ordinary trading firm, to execute notes in the name of the firm.

—First Nat. Bank v. State Nat. Bank, 131 Fed. 422; In re McIntire, Id.....65 C. C. A. 406

Where an incoming partner had no knowledge until a very short time before bankruptcy proceedings against the firm were instituted that his partner had executed firm notes to secure the partner's pre-existing indebtedness to a bank, and the books of the firm, if examined by such partner, would not have disclosed the execution of such notes, such incoming partner did not ratify their execution, so as to justify their allowance as a claim against the firm's assets.

—First Nat. Bank v. State Nat. Bank, 131 Fed. 422; In re McIntire, Id.....65 C. C. A. 406

Holders of notes of a bankrupt partnership, also indorsed by the individual partners, may, at their election, prove the same as individual debts of one of the partners, and, under Bankr. Act July 1, 1898, c. 541, § 5f, 30 Stat. 548 [U. S. Comp. St. 1901, p. 3424], are entitled to payment in full from his estate before any part of the same is applied on firm debts, at least where there are substantial firm assets; and it is immaterial that all the capital of the partnership was also contributed by such partner.

—Buckingham v. First Nat. Bank, 131 Fed. 192.....65 C. C. A. 498

Two men for a number of years conducted a business under a partnership agreement by which each agreed to bring into the business as rapidly as practicable all money he should be able to control, and not to withdraw, without the consent of the other, more than necessary to support his family. It was also provided that each was to have a certain interest in the business, and, to equalize the capital, interest should be allowed annually. All the capital was contributed by one, and, the business having been conducted during the later years at a loss, the other, by agreement, drew out a fixed sum per month for living expenses. *Held*, that such arrangement constituted a partnership, and that, on the bankruptcy of the concern, the capital employed in the business and the debts incurred therein were firm property and debts, and not those of the partner who furnished the capital.

—Buckingham v. First Nat. Bank, 131 Fed. 192.....65 C. C. A. 498

A finding by a referee, affirmed by the District Court, that a partner in a bankrupt firm was not indebted to the partnership on account of money drawn out, which was less than he was entitled to draw under the partnership agreement, *held* sustained by the evidence.

—Buckingham v. First Nat. Bank, 131 Fed. 192.....65 C. C. A. 498

Digitized by Google

§ 3. Rights, remedies, and discharge of bankrupt.

Where a bankrupt conveyed real estate by an absolute deed, more than two years prior to the bankruptcy, in order to constitute a fraudulent concealment by failing to schedule the same, which will defeat the right to a discharge, objecting creditors must show that the bankrupt still retains a secret interest in the property. It is not sufficient that it may have been conveyed in fraud of creditors, but it must still be in fact the property of the bankrupt's estate.

—In re Dauchy, 130 Fed. 532.....65 C. C. A. 78

An involuntary proceeding in bankruptcy was commenced. The bankrupt made no application for a discharge within 12 months after the adjudication, and failed to comply with an order to pay over to the trustee $6,185.37. While this proceeding was pending the bankrupt commenced a voluntary proceeding in another division of the same court, and applied for a discharge from the same debts scheduled and provable in the first proceeding. *Held*, the District Court rightly denied the application for the discharge and dismissed the voluntary proceeding.

—Kuntz v. Young, 131 Fed. 719.....65 C. C. A. 477

A failure of the bankrupt to apply in due time for, or a refusal by the court to grant, a discharge from debts provable in proceedings under one petition in bankruptcy, renders the question of the right of the bankrupt to a discharge from those debts in a proceeding under a subsequent petition res adjudicata.

—Kuntz v. Young, 131 Fed. 719.....65 C. C. A. 477

§ 4. Appeal and revision of proceedings.

Where an appeal has been duly taken and perfected under Bankr. Act July 1, 1898, c. 541, § 25a, 30 Stat. 553 [U. S. Comp. St. 1901, p. 3432], from a judgment allowing or rejecting a debt, the district court is thereby deprived of jurisdiction to further consider matters involved in the appeal, and cannot entertain a motion for a rehearing so long as the appeal is pending.

—First Nat. Bank v. State Nat. Bank, 131 Fed. 430...65 C. C. A. 414

BANKS AND BANKING.

Assignments to bank, see "Assignments," § 1.
Survival of cause of action against representatives of deceased directors of insolvent bank, see "Abatement and Revival."

§ 1. Banking corporations and associations.

That certain of the defendants sued were not directors of an insolvent bank at the time acts of mismanagement complained of occurred, did not exempt them from liability to depositors, where it appeared that during their term of office dividends were paid from the capital, which was also alleged as a ground of action.

—Boyd v. Schneider, 131 Fed. 223.....65 C. C. A. 209

§ 2. Functions and dealings.

A bank cannot recover the amount collected on a cashier's draft issued by its cashier and made payable to his individual creditor, where it is shown that the cashier had on numerous previous occasions drawn similar drafts in payment of his own debts, and such acts had continued for a period sufficiently long to establish a settled course of business in the conduct of the bank which had been sanctioned by its officers, and was known, or should have been known, to its directors.

—Campbell v. National Broadway Bank, 130 Fed. 699.....
65 C. C. A. 664

§ 3. National banks.

The national bank act, providing for the administration of the affairs of an insolvent national bank by a receiver appointed by the Comptroller of the Currency, does not prevent depositors of an insolvent bank from

Digitized by Google

maintaining a suit against its directors for negligently permitting its officers to loan the bank's assets in violation of such act, constituting a breach of the bank's implied contract with such depositors, inherent in the contract of deposit, that the bank would use such deposits and its other assets in conformity with the safeguards provided by law.
—Boyd v. Schneider, 131 Fed. 223.....65 C. C. A. 209

Where several depositors of a national bank had claims against a number of the bank's directors, arising out of their failure to take steps to prevent the bank's assets being improperly loaned, and none of such depositors could, by separate suits at law, recover that to which he was entitled, such depositors were entitled to maintain a single suit against such directors in equity.
—Boyd v. Schneider, 131 Fed. 223.....65 C. C. A. 209

Where several depositors of an insolvent national bank filed a bill against its directors for a breach of their implied contract to see that the bank's assets were used according to law, but the bill failed to allege the time when complainants' deposits were made, complainants were entitled to leave to amend in that respect.
—Boyd v. Schneider, 131 Fed. 223.....65 C. C. A. 209

A national bank has no power to invest its surplus fund in the stock of another national bank, and cannot be assessed thereon as a stockholder, although it actually made the purchase and held and received dividends on the stock.
—Shaw v. National German-American Bank, 132 Fed. 658.....
65 C. C. A. 620

BAR.

Of action by former adjudication, see "Judgment," § 2.

BEST AND SECONDARY EVIDENCE.

In civil actions, see "Evidence," § 1.

BILL OF LADING.

See "Carriers," § 1; "Shipping," §§ 1, 2.
Internal revenue stamps, see "Internal Revenue."
Parol or extrinsic evidence, see "Evidence," § 3.

BILLS AND NOTES.

Notes given by one partner as claim against bankrupt partnership, see "Bankruptcy," § 2.
Of corporations, see "Corporations," § 4.

BONDS.

Issuance by corporations, see "Corporations," § 4.
Mandamus to compel levy of tax to pay judgment on bonds issued in aid of railroads, see "Mandamus," § 1.
Secured by mortgage, see "Mortgages," § 1.

BREACH.

Of condition, see "Insurance," § 5.
Of contract, see "Vendor and Purchaser," § 1.

Digitized by Google

BRIDGES.

Liability of bridge company for injuries to employé, see "Master and Servant," § 2.

CANCELLATION OF INSTRUMENTS.

Setting aside fraudulent conveyances, see "Fraudulent Conveyances," § 1.

CARGO.

See "Shipping."

CARRIERS.

Carriage of goods by vessels, see "Shipping," § 1.
Internal revenue stamps on bills of lading, see "Internal Revenue."
Regulation of operation of railroads, see "Railroads," § 2.

§ 1. Carriage of goods.

A bill of lading provided that, in case of loss or injury of the goods, the damage should be adjusted on the basis of their value at the place and time of shipment, and that the carrier should have the benefit of any insurance effected by the shipper. He insured the goods for their value at the port of destination, but the policy contained a provision that in case of any agreement between the assured and any carrier whereby, in case of loss for which the carrier would be liable, he should have the benefit of the insurance, there should be no liability on the policy beyond the amount which was not recoverable from the carrier, and to make good the loss temporarily by advancing money pending delay in collecting from the carrier, which should not affect the final liability of the insurer. The goods were damaged in shipment, and the insurer advanced a sum to the owner; taking a receipt by which he agreed to prosecute his claim against the carrier, and to refund to the insurer the amount collected. *Held*, that such advance was strictly within the terms of the policy, and did not constitute a payment of the loss, whereby the carrier could claim the benefit under the bill of lading as a set-off in an action by the owner to recover the damages.

—Pennsylvania R. Co. v. Burr, 130 Fed. 847.....65 C. C. A. 331

Where a bill of lading limited the liability of the carrier, in case of loss or damage, to the value of the goods at the time and place of shipment, a further provision that he should have the benefit of any insurance effected by the owner is valid only as to such insurance, or so much of the insurance as represents the goods, and the value for which, in case of loss, the carrier is liable; and he cannot claim the benefit of insurance covering the increased value of the goods at the port of destination, which the owner had the right to effect for his own protection.

—Pennsylvania R. Co. v. Burr, 130 Fed. 847.....65 C. C. A. 331

The rule is that the consignor of goods is primarily liable for the payment of the freight, as the party making the contract, regardless of whether or not he is the owner of the goods, or whether the freight is secured by lien.

—Portland Flouring Mills Co. v. British & Foreign Marine Ins. Co., 130 Fed. 860 ....65 C. C. A. 344

§ 2. Carriage of passengers.

An express messenger riding in a railway car in the discharge of the duties of his employment is chargeable with notice of the contract under which he is being transported by the railroad company.

—Long v. Lehigh Valley R. Co., 130 Fed. 870.....65 C. C. A. 354

Digitized by Google

An express messenger while riding in a railway car in the performance of the duties of his employment is not a passenger, nor does the railroad company occupy the relation of common carrier toward him, but of a private carrier only, and there is no public policy which forbids the parties from contracting for its exemption from liability for negligence in the carrying of such messenger.
—Long v. Lehigh Valley R. Co., 130 Fed. 870.....65 C. C. A. 354

A contract by which an express messenger, as a condition of his employment, assumes all risk of personal injury while riding on any transportation line, and agrees to release and indemnify the company or any transportation company with which it may contract from any claim which might be made on account of any such injury, must be construed to apply to an injury resulting from negligence of a railroad company in whose car he is riding in the course of his employment, since, not being a passenger while so riding, no claim could be made against the company except on the ground of negligence.
—Long v. Lehigh Valley R. Co., 130 Fed. 870.....65 C. C. A. 354

A contract with an express company, by which the messenger, as a condition of his employment, assumes all risk of injury while riding in the railway car in the performance of his duties, and one between the express and railroad companies by which the former agrees to hold the latter indemnified against claims for injuries to its employés, whether arising from negligence or otherwise, are valid and effective to prevent a messenger, injured in collision due to the negligence of railroad employés, from recovering therefor against the railroad company.
—Long v. Lehigh Valley R. Co., 130 Fed. 870.....65 C. C. A. 354

CERTIFICATE.

Of acknowledgment of written instrument, see "Acknowledgment," § 1.
Stamp tax on notary's certificate, see "Internal Revenue."

CHALLENGE.

To juror, see "Jury," § 1.

CHANCERY.

See "Equity."

CHARGE.

By carrier, see "Carriers," § 1.
To jury in civil actions, see "Trial," § 2.

CHARTER.

Of corporation, see "Corporations," §§ 1, 6.

CHEAT.

See "Fraud."

CHINESE.

Exclusion or expulsion, see "Aliens," § 1.

CHOSE IN ACTION.

Assignment, see "Assignments."

Digitized by Google

CIRCUIT COURTS OF APPEALS.

See "Courts," § 1.

CITATION.

On appeal, see "Appeal and Error," § 8.

CITIES.

See "Municipal Corporations."

CITIZENS.

See "Aliens"; "Indians."

Citizenship ground of jurisdiction of United States courts, see "Removal of Causes," § 1.

Where an alien woman, who has come into this country, pending proceedings for her deportation under the immigration laws, marries a citizen of the United States, she at once takes the status of her husband, and, unless released from custody, is entitled to be discharged on a writ of habeas corpus.

—Hopkins v. Fachant, 130 Fed. 839 .....65 C. C. A. 1

CLAIMS.

Against estate of bankrupt, see "Bankruptcy," § 2.
Mining claims, see "Mines and Minerals," § 1.
Of patent, see "Patents," § 2.

COLLATERAL ATTACK.

On judgment, see "Judgment," § 1.

COLLISION.

Review in admiralty of action for, see "Admiralty," § 5.
Subrogation of insurer to rights of owner of boat sunk by collision, see "Insurance," § 8.

§ 1. Vessels in tow.

The rule reaffirmed that a tug with a long tow navigating the New England coast will be held to the exercise of extraordinary care, in the interest of common safety

—The Admiral Schley, 131 Fed. 433; The Charles F. Mayer, Id.....
65 C. C. A. 417

A steamer, with two coal barges in tow on a line, the whole 2,300 feet in length, deeming it unsafe to enter Boston Harbor because of a dense fog, continued to move slowly about with her tow between the lightship and the harbor entrance, crossing a number of times the usual path of steamers leaving the port, which was known to her master. While moving away from the harbor on a course nearly parallel to such path, and just as she had changed her course across it, she heard the signals of a vessel coming out, but did not change her course, and a collision between the two steamers resulted. The outgoing vessel was clearly in fault for excessive speed, but was misled by the course of the tows which she

Digitized by Google

passed, which were still on a course practically parallel with her own. *Held*, that the towing vessel was also in fault for loitering with a tow of such dangerous length in the known way of outgoing vessels without necessity, it not being shown that she could not as well have kept her steerageway by maneuvering further out to sea, or to one side, which fault was aggravated by her failure to change her course back on hearing the other vessel, whose course she had reason to believe she was crossing; the rule prohibiting such change of course in a fog not being applicable under the circumstances.

—The Admiral Schley, 131 Fed. 433; The Charles F. Mayer, Id..... 65 C. C. 417

§ 2. Vessels at rest, at anchor, or at piers.

A steamship which, while not anchored, was about to anchor, and had stopped her engines, and was moving very little with the tide, if at all, had the rights of a vessel at rest with respect to passing vessels; and a tug with a tow on a long line, which saw and knew the situation of the ship, was solely in fault for a collision between her and the tow, due to the failure to allow sufficient room in passing.

—Britain S. S. Co. v. J. B. King Transp. Co., 131 Fed. 62..... 65 C. C. A. 300

A steamship, which has stopped her machinery, while lying at a quarantine station, where it is not customary to anchor, and is moving only slightly with the tide and without headway, has to a large extent the rights of a vessel at rest as regards other vessels that are passing.

—The Col. John F. Gaynor, 130 Fed. 856.....65 C. C. A. 340

An incoming British steamship in charge of a licensed pilot stopped in the daytime off the quarantine station in the Delaware river, at the usual place, which was not more than two lengths from the pier on the western side, to undergo the customary medical inspection. She did not anchor, and it was not customary to do so. While so lying, with the quarantine flag up, and while the inspection was being made, a tug came down the river with two heavily laden scows, without rudders, in tow on a line which made the tow from 1,400 to 1,600 feet long. Each vessel saw the other when a mile distant, and the tug understood the position of the steamship and the purpose for which she had stopped. The tug was properly on the westerly side of the channel, but there was ample room for her to pass to the eastward, so as to avoid any danger of collision. She had no lookout on the stern to keep watch of the tow, and passed so close to the steamship that both of the scows, sheering as she turned from the straight course, struck the steamship, and injured her. *Held*, that the steamship was entitled, under the circumstances, to the rights of a vessel at anchor, and that the tug was solely in fault in failing to keep at a safe distance in passing.

—The Col. John F. Gaynor, 130 Fed. 856.....65 C. C. A. 340

§ 3. Fog or thick weather.

A vessel may be in fault for a collision in a fog which would not have occurred but for her being in the usual track of vessels leaving a port, where she was there without necessity, although, if it had been in the line of her voyage, she might have been within her right, and not chargeable with fault.

—The Admiral Schley, 131 Fed. 433; The Charles F. Mayer, Id..... 65 C. C. A. 417

§ 4. Narrow channels, harbors, rivers, and canals.

A steamship and a tug both *held* in fault for a collision between the ship and barges in tow of the tug, which occurred on the Delaware river in the night, on the ground that, although the two vessels saw each other when a mile apart, each held its course and approached head on until they were so close together that the danger of collision between them was imminent, and a confusion of signals resulted, which brought about the collision; the steamship also for failure to maintain an efficient lookout; and the tug for being on the left-hand side of the channel, and signaling her intention to pass on the starboard of the steamship, in violation of

Digitized by Google

the rules; the evidence being insufficient to establish a custom which justified her in keeping that side of the channel in passing up the river.
—The John I. Brady and The Wildcroft, 131 Fed. 235..... 65 C. C. A. 221

§ 5. **Suits for damages.**

The rule that where one vessel is shown to have been clearly in fault, without which a collision would not have occurred, the other vessel is to be presumed not in fault, is artificial and misleading unless very carefully applied. The rule may operate in reverse directions according to which vessel's faults are first considered.
—The Admiral Schley, 131 Fed. 433; The Charles F. Mayer, Id..... 65 C. C. A. 417

Also what is sometimes stated as a rule to the effect that a vessel which has come into collision had a right to proceed on the assumption that the other vessel would perform her duty has a limited effect, and is likewise misleading, unless very carefully applied, and it does not reach the circumstances of this case.
—The Admiral Schley, 131 Fed. 433; The Charles F. Mayer, Id..... 65 C. C. A. 417

COMBINATIONS.

See "Monopolies," § 1.

COMITY.

Between courts, see "Courts," § 2.

COMMERCE.

Carriage of goods and passengers, see "Carriers"; "Shipping."
Combinations in restraint of interstate commerce, see "Monopolies," § 1.
Presentation in lower court of objections for purpose of reviewing evidence establishing interstate character of commerce, see "Appeal and Error," § 4.
Regulations as to use of safety appliances by railroads engaged in interstate commerce, see "Railroads," § 2.

§ 1. **Means and methods of regulation.**

A shipment, originating in one state and being moved to a point in another state, is impressed with the character of interstate traffic, which will follow the shipment until the actual transit ceases. A car used in moving such shipment remains subject to Act March 2, 1893, c. 196, 27 Stat. 531 [U. S. Comp. St. 1901, p. 3174], until its use in moving the shipment is ended, notwithstanding the transit may be temporarily, but not indefinitely, suspended; and this, whether the ultimate destination of the shipment be near to or remote from the point of suspension.
—Chicago, M. & St. P. Ry. Co. v. Voelker, 129 Fed. 522..... 65 C. C. A. 226

COMMON CARRIERS.

See "Carriers."

COMPENSATION.

Of attorney for bankrupt, see "Bankruptcy," § 2.

COMPETENCY.

Of jurors, see "Jury," § 1.

Digitized by Google

COMPETITION.

Unfair competition, see "Trade-Marks and Trade-Names," § 1.

COMPUTATION.

Of period of limitation, see "Limitation of Actions," § 2.

CONCURRENT JURISDICTION.

Of courts, see "Courts," § 2.

CONDEMNATION.

Taking property for public use, see "Eminent Domain."

CONDITIONS.

In insurance policies, see "Insurance," § 5.
Precedent to action for breach of contract of sale, see "Sales," § 2.
Precedent to action of trover, see "Trover and Conversion," § 1.

CONFUSION OF GOODS.

The doctrine of confusion of goods has no application to cattle or horses, or other property of similar nature, that can be readily identified.
—McKnight v. United States, 130 Fed. 659.....65 C. C. A. 37

CONSIDERATION.

Of contract, see "Contracts," § 1.

CONSOLIDATION.

Of corporations, see "Corporations," § 6.

CONSPIRACY.

Combinations to monopolize trade, see "Monopolies," § 1.

CONSTABLES.

See "Sheriffs and Constables."

CONSTITUTIONAL LAW.

Provisions relating to particular subjects.

See "Eminent Domain," § 1; "Limitation of Actions," § 1.

§ 1. Obligation of contracts.
The obligation of a contract is not terminated by the rendition of a judgment thereon, but continues until the debt is paid, and a law of a

Digitized by Google

state which unreasonably restricts the time for commencing an action in its own courts for the enforcement of a judgment rendered by a court of another state on an existing contract is unconstitutional as impairing the obligation of the contract.

—Lamb v. Powder River Live Stock Co., 132 Fed. 434..65 C. C. A. 570

§ 2. Due process of law.

The Alien Immigration Act of March 3, 1903, c. 1012, § 21, 32 Stat. 1218 [U. S. Comp. St. Supp. 1903, p. 180], does not confer authority on the Secretary of the Treasury to arbitrarily order the deportation of an alien who has entered this country and become a part of its population without giving such alien an opportunity to be heard on the questions involving his or her right to be and remain in the United States in such manner as is consistent with the principles that inhere in due process of law.

—Hopkins v. Fachant, 130 Fed. 839.....65 C. C. A. 1

The power of a state to prescribe a limitation for actions on judgments of the courts of other states, different from that prescribed for actions on judgments rendered within the state, is subject to the fundamental condition that a reasonable time must be given for the exercise of the right of action; otherwise the law is invalid, as in violation of the constitutional provision that no person shall be deprived of property without due process of law.

—Lamb v. Powder River Live Stock Co., 132 Fed. 434..65 C. C. A. 570

CONTRACTS.

Assignment, see "Assignments."
Damages for breach, see "Damages," §§ 1, 2.
Election of remedies for breach, see "Election of Remedies."
Harmless error in action for breach, see "Appeal and Error," § 9.
Impairing obligation, see "Constitutional Law," § 1.
Parol or extrinsic evidence, see "Evidence," § 3.
Restraining performance or breach, see "Injunction," § 1.
Specific performance, see "Specific Performance."
Survival of action on contract, see "Abatement and Revival," § 1.
Validity of contract in violation of anti-trust statute, see "Monopolies," § 1.

Contracts of particular classes of parties.

See "Corporations," § 4; "Master and Servant"; "Municipal Corporations," § 1.
National banks, see "Banks and Banking," § 3.

Contracts relating to particular subjects.

See "Mines and Minerals," § 2; "Railroads," § 1.
Public water supply, see "Waters and Water Courses," § 1.
Transportation of express messengers, see "Carriers," § 2.

Particular classes of express contracts.

See "Insurance"; "Partnership"; "Sales."
Agency, see "Principal and Agent."
Affreightment, see "Shipping," § 1.
Employment, see "Master and Servant."
Sales of realty, see "Vendor and Purchaser."

Particular classes of implied contracts.

See "Account Stated."
Deposit in national bank, see "Banks and Banking," § 3.

§ 1. Requisites and validity.

A contract by which sellers of property agreed, as a condition of the sale, that they would not become engaged or interested in the business

Digitized by Google

of catching or manufacturing the products from certain classes of fish along the Atlantic seaboard, in competition with the business of the purchaser, for the term of 20 years, is not void as in restraint of trade and contrary to public policy.
—Fisheries Co. v. Lennen, 130 Fed. 533.....65 C. C. A. 79

An agreement ancillary to a sale of a corporation's business, by which the stockholders, who received the purchase price, agreed that, in order to protect the good will of the business so sold, they would not either directly or indirectly engage in the same business within certain distinct limits for a period of 10 years, was not void, as an unreasonable restraint of competition in trade, at common law.
—Davis v. A. Booth & Co., 131 Fed. 31.....65 C. C. A. 269

3 How. Ann. St. § 9354j, denominated an act prohibiting certain trust combinations, and providing that all contracts, the purpose or intent of which shall be in any manner to prevent or restrict free competition in the sale of any article or commodity, or in any other branch of business or labor, shall be utterly illegal and void, provided that it shall not invalidate or affect contracts for the sale of the good will of a trade or business, does not prohibit a contract for the sale of a business where it was not intended that the seller should thereafter have any interest in the property, or an agreement by which the seller's stockholders contracted not to again engage in a similar business in competition with the buyer in certain places for a specified time.
—Davis v. A. Booth & Co., 131 Fed. 31.....65 C. C. A. 269

An agreement by which the stockholders of a corporation, on selling its assets to complainant's assignor, agreed not to again engage in a similar business in specified localities for a period of 10 years, or do any act tending to impair the good will of the business sold, was not contrary to public policy.
—Davis v. A. Booth & Co., 131 Fed. 31.....65 C. C. A. 269

Where defendant contracted to manufacture and sell to plaintiff certain machinery, defendant was not entitled to refuse performance on the ground that the machinery contracted for would infringe outstanding patents.
—E. W. Bliss Co. v. Buffalo Tin Can Co., 131 Fed. 51..65 C. C. A. 289

Where the consent of the state was not obtained to a contract between complainants and the receiver of a street railway company and a city, by which the railway company was permitted to permanently discontinue its railway on a certain street, such contract was void as against public policy, the right to operate the same being a franchise granted by the state on considerations of public welfare.
—Thompson v. Schenectady Ry. Co., 131 Fed. 577....65 C. C. A. 325

§ 2. Construction and operation.

A covenant by sellers of fisheries plants, together with their good will, not to enter into business competing with the purchaser along the Atlantic seaboard for a term of 20 years, *held* to be personal in its nature, and to preclude them from establishing a competing business on Chesapeake Bay.
—Fisheries Co. v. Lennen, 130 Fed. 533.....65 C. C. A. 79

Where a contract ancillary to the sale of a business provided that the stockholders of the seller would not again engage in a similar business for a period of 10 years in the territory, or the immediate vicinity of the territory, dealt in by the corporation, or operated in by it or its agents, or the immediate vicinity of such territory, the localities guarded against were restricted to those in which the selling company had establishments for doing business, and the immediate vicinity thereof, and did not include all parts or every one of the United States in which a former customer resided, or into which the corporation's correspondence had extended, or through which an agent of the company had traveled.
—Davis v. A. Booth & Co., 131 Fed. 31.....65 C. C. A. 269

Digitized by Google

CONTRIBUTORY INFRINGEMENT.

Of patent, see "Patents," § 3.

CONVERSION.

Wrongful conversion of personal property, see "Trover and Conversion."

CONVEYANCES.

See "Assignments"; "Mortgages."
In fraud of creditors, see "Fraudulent Conveyances."
Of mining property, see "Mines and Minerals," § 2.

COPY.

As evidence, see "Evidence," § 1.

CORPORATIONS.

Bankruptcy proceedings against, see "Bankruptcy," § 1.
Effect on limitation of action against stockholder of pendency of action against corporation, see "Limitation of Actions," § 2.
Requisites and validity of contracts in general, see "Contracts," § 1.

Particular classes of corporations.

See "Municipal Corporations."
Banks, see "Banks and Banking," § 1.
Water companies, see "Waters and Water Courses," § 1.

§ 1. Corporate existence and franchise.

The alteration or amendment of the charter of a corporation by the Legislature, within power reserved by the grant, does not require submission to the stockholders for their acceptance.

—McKee v. Chautauqua Assembly, 130 Fed. 536.....65 C. C. A. 8

Under power reserved to a Legislature to amend, annul, or repeal the charter of a corporation, it may make any alteration or amendment which will not defeat or substantially impair the object of the grant or any rights vested under it.

—McKee v. Chautauqua Assembly, 130 Fed. 536.....65 C. C. A. 8

§ 2. Capital, stock, and dividends.

Statements in a stock subscription contract that certain patents owned by persons designated were the basic patents under which the manufactured article was to be produced, and that it was proposed by the corporation to be formed, to acquire such patents and improvements for the United States, and to pay therefor 480,000 shares of the full-paid common stock of the company and $1,000,000 in cash, were statements of fact on which it was intended that subscribers should rely, and were, therefore, the proper subjects of false representations.

—American Alkali Co. v. Salom, 131 Fed. 46.....65 C. C. A. 284

Where misrepresentations of fact were contained in a corporate stock subscription contract itself, and were held out as material inducements to persons who were solicited to subscribe for stock, a subscriber's signature to the contract, in the absence of evidence to the contrary, was

Digitized by Google

sufficient proof that he relied and acted on the faith of such representations.

—American Alkali Co. v. Salom, 131 Fed. 46.....65 C. C. A. 284

Where defendant was induced to subscribe for stock in a corporation on the faith of false representations made by the corporation itself and contained in the subscription contract, the corporation was estopped to claim that defendant was bound to investigate the truth of such statements, and was guilty of laches in failing to make any inquiry to ascertain the truth of such representations until shortly before defendant filed his affidavit of defense in a suit by the corporation to recover assessments levied on the stock.

—American Alkali Co. v. Salom, 131 Fed. 46.....65 C. C. A. 284

Where a subscriber to the stock of a corporation defended on the ground that he was induced to subscribe by fraudulent representations, an objection that an offer of evidence was not complete in that it did not propose to show that the statements of fact alleged to be untrue were made with a fraudulent intent, was cured by an instruction that it was necessary for defendant to show not only that the statements complained of were false, but that they were made with a fraudulent intent.

—American Alkali Co. v. Salom, 131 Fed. 46.....65 C. C. A. 284

Where, in an action on a stock subscription contract, defendant pleaded a rescission of the contract for false representations and fraud, and in his affidavit of defense tendered a return of his stock, such tender was sufficient, though prior to his discovery of the fraud he had sold certain of his shares, which, however, he could replace at any time by purchase in the open market.

—American Alkali Co. v. Salom, 131 Fed. 46.....65 C. C. A. 284

A subscriber to the stock of a corporation is entitled to plead a rescission of the sale for fraud as a defense to an action at law to recover assessments on the subscription contract.

—American Alkali Co. v. Salom, 131 Fed. 46.....65 C. C. A. 284

§ 3. Officers and agents.

As to all matters of management and control within the scope of the powers delegated to the trustees or directors of a corporation by its charter, the affairs of the corporation are committed to their judgment and discretion, and the courts cannot sit in review of their errors at suit of the stockholders.

—McKee v. Chautauqua Assembly, 130 Fed. 536.....65 C. C. A. 8

§ 4. Corporate powers and liabilities.

A corporation having charter power to purchase the stock of other corporations bought the stock of another corporation, and in part payment therefor issued stock of its own, both common and preferred, which was deposited in trust with the stock purchased. It also issued to the sellers, through the trust company, certificates of indebtedness, payable in semiannual installments for five years. The agreement also provided that all dividends declared on the stock of the purchasing company should be paid to the trust company and applied in payment of the certificates until their full payment, after which the stock was to be delivered and the trust terminated. *Held*, that such certificates were not ultra vires, having been issued for one of the purposes for which the corporation was organized, and in the exercise of its implied power to incur indebtedness for such purpose, and that the corporation could not assert their invalidity on the ground that they were in effect, and were intended to be, a guaranty to the holders of a fixed dividend on their stock for a term of five years.

—Ingraham v. National Salt Co., 130 Fed. 676.....65 C. C. A. 54

Under 1 Ballinger's Ann. Codes & St. § 4255, providing that all corporate management shall be vested in a board of trustees, where an application for fidelity insurance by a building and loan association stated that the secretary insured derived his authority from the board of trustees, knowl-

Digitized by Google

edge on the part of a single officer, trustee, or the president of the association that the secretary was indebted to it at the time the policy was issued could not be imputed to the corporation without proof that the officer's knowledge had been communicated to the board, so as to constitute a breach of a warranty in the policy that the secretary was not indebted to the association at the time of the issuance thereof.

—American Bonding Co. v. Spokane Building & Loan Soc., 130 Fed. 737 .....65 C. C. A. 121

A corporation has no power to execute its notes, secured by a mortgage of its property, for individual debts of its stockholders incurred in the purchase of their stock, to the exclusion of creditors of the corporation, although their claims arose after the mortgage was executed and recorded.

—In re Haas Co., 131 Fed. 232; Taylor v. Ziegenhagen, Id..... 65 C. C. C. 218

A court of equity in a suit by a trustee for bondholders of a corporation to obtain a sale of securities pledged with it for the benefit of the bondholders is not required, at the instance of an intervening bondholder, to direct the adjustment by way of set-off in the course of distribution of the fund realized of unliquidated demands against certain of the bondholders on account of unpaid stock subscriptions and other alleged liabilities growing out of the promotion of the corporation, but may properly leave such matters to be liquidated in independent suits, both because such is the more orderly course of procedure and because general creditors of the corporation as well as the bondholders are entitled to share in the proceeds of such recoveries.

—Land Title & Trust Co. v. Tatnall, 132 Fed. 305....65 C. C. A. 671

§ 5. Insolvency and receivers.

The appointment of receivers for a corporation by a state court of general jurisdiction was not subject to collateral attack on the ground that the court did not have jurisdiction of the corporation's person.

—Blue Mountain Iron & Steel Co. v. Portner, 131 Fed. 57..... 65 C. C. A. 295

§ 6. Consolidation.

While a reservation to the Legislature, in the charter of a corporation, of the power to annul or repeal such charter, cannot be used to take away property of the corporation, the action of the Legislature in consolidating a corporation with others organized for different purposes, and requiring it to assume their liabilities, is not invalid under such rule, but is within the reserved power, where, by the charters of such other corporations, they have always been under the sole management and control of its own board of trustees; the consolidation in such case being only a legislative recognition of the existing relations between them.

—McKee v. Chautauqua Assembly, 130 Fed. 536.....65 C. C. A. 8

COSTS.

Dismissal of frivolous or malicious action brought in forma pauperis, see "Dismissal and Nonsuit," § 1.
In action for specific performance, see "Specific Performance," § 2.
Review of judgment for, see "Appeal and Error," § 3.

§ 1. Nature, grounds, and extent of right in general.

An action in a federal court against two defendants as joint trespassers was dismissed as to one for want of jurisdiction, and plaintiff then sued such defendant in a state court, and recovered a judgment, which was satisfied in full, and payment accepted. Defendant in the federal court then filed an amended answer, setting up the recovery and satisfaction of such judgment as a defense additional to those previously pleaded, as permitted by the state practice, and plaintiff, conceding the sufficiency of such defense, dismissed the action. *Held*, that the amended answer was not a waiver of the prior defenses, nor an admission of the justice

Digitized by Google

of plaintiff's original claim, and that there was nothing in the record which took the case out of the general rule, by which defendant, as the prevailing party, was entitled to a judgment for costs.
—Western Coal & Mining Co. v. Petty, 132 Fed. 603..65 C. C. A. 667

§ 2. On appeal or error, and on new trial or motion therefor.
Where it is apparent, from the fact that the record presents no question for decision by the appellate court, that a writ of error was sued out for delay, the Circuit Court of Appeals will award damages on affirmance, as authorized by rule 28 (90 Fed. cxix, 31 C. C. A. cxix).
—Chicago Terminal Transfer R. Co. v. Bomberger, 130 Fed. 884.... 65 C. C. A. 64

COUNTIES.

Liability of insurer for injuries from fire started by order of county supervisors, see "Insurance," § 7.

§ 1. Fiscal management, public debt, securities, and taxation.
Those provisions of Act Ky. Feb. 24, 1868 (Laws 1868, p. 622, c. 548), authorizing counties to issue bonds in payment for railroad stock, which made it the duty of the county judge to levy taxes for the payment of the principal and interest of such bonds, were not repealed by the new state Constitution of 1891, which continued the county courts, and also created fiscal courts in each county; nor by subsequent legislation thereunder embodied in the Kentucky Statutes of 1894, which devolved on the fiscal courts the duty of levying county taxes for general purposes, but expressly provided by section 1882 that the powers conferred should not extend to the levying of taxes to pay principal or interest of any railroad bond indebtedness. The effect of such provision was to leave the duty of levying such taxes, which is a purely ministerial one, resting upon the county judge.
—Guthrie v. Sparks, 131 Fed. 443.....65 C. C. A. 427

Ky. St. 1894, § 1882, which confers power on the fiscal court of each county to levy taxes for county purposes, but expressly excepts the power to levy a tax to pay any railroad bond indebtedness, or the interest thereon, is not repealed by implication as to such exception by section 1839 in the same chapter, which was originally enacted at a later date, and authorizes such courts to levy ad valorem taxes not exceeding a certain per cent. unless required to pay county indebtedness incurred prior to 1891, in which case they are authorized to make an additional levy therefor. Such provisions were not only brought together and re-enacted in the general statutes, but are capable of standing together, effect being given to the special exception created by section 1882.
—Guthrie v. Sparks, 131 Fed. 443.....65 C. C. A. 427

COURTS.

Appellate jurisdiction, see "Appeal and Error," § 5.
Determination and disposition of cause in United States appellate courts, see "Appeal and Error," § 10.
Judges, see "Judges."
Judgments of foreign courts, see "Judgment," § 1.
Of proceedings for appointment of receivers in bankruptcy, see "Bankruptcy," § 1.
Removal of action from state court to United States court, see "Removal of Causes."
Review of decisions, see "Appeal and Error."

§ 1. United States courts.
Under Act March 3, 1891, c. 517, 26 Stat. 826 [U. S. Comp. St. 1901, p. 547], creating the Circuit Courts of Appeals, section 6 (26 Stat. 828 [U. S. Comp. St. 1901, p. 549]), an appeal to such court does not bring before it for review the question of the jurisdiction of the Circuit or District Court

Digitized by Google

from which the appeal is taken, which is reviewable only by the Supreme Court, under section 5.

—Fisheries Co. v. Lennen, 130 Fed. 533.....65 C. C. A. 79

Where a cause of action is created by a state statute, the question when the right of action accrues, and what conditions authorize its enforcement, is one of judicial construction, as to which the decisions of the highest court of the state are controlling on the federal courts.

—Whitman v. Atkinson, 130 Fed. 759.....65 C. C. A. 185

Decisions of state courts that instruments, though unstamped, as required by War Revenue Act June 13, 1898, c. 448, § 14, 30 Stat. 455 [U. S. Comp. St. 1901, p. 2296], were admissible in evidence, have no application to federal courts.

—Sackett v. McCaffrey, 131 Fed. 219.....65 C. C. A. 205

Where an order sustaining a demurrer to a bill for want of jurisdiction was in favor of appellants, who appealed from other orders and a final decree, appellee could not object that the Circuit Court of Appeals had no jurisdiction of the appeal, on the ground that the question of jurisdiction could only be reviewed by the Supreme Court.

—Viquesney v. Allen, 131 Fed. 21.....65 C. C. A. 259

A municipal ordinance not passed in accordance with legislative authority is not a law of the state within the meaning of the prohibitions of the Constitution of the United States, and a suit to enjoin the enforcement of an ordinance alleged to have been passed in violation of the requirements of the state law presents no question arising under the Constitution, which confers jurisdiction on a federal court, on the ground that the enforcement of the ordinance will deprive complainants of property without due process of law.

—City of Savannah v. Holst, 132 Fed. 901.....65 C. C. A. 449

The right of collateral attack on a judgment is a matter of general law as to which the decisions of the courts of a state are not binding on a federal court.

—Phœnix Bridge Co. v. Castleberry, 131 Fed. 175....65 C. C. A. 481

Where an action in the federal court depends on the construction of a state statute providing for the sale of state lands, the federal court is required to adopt the construction placed on the statute by the highest court of such state.

—Lockard v. Asher Lumber Co., 131 Fed. 689.....65 C. C. A. 517

The opinion of a state court of last resort, construing a state statute, is conclusive on the federal courts sitting in such state to the extent only of the precise question decided.

—Southern Ry. Co. v. Simpson, 131 Fed. 705.....65 C. C. A. 563

The question whether or not an insurable interest in an assignee is requisite to the validity of the assignment of a policy of life insurance, which was originally issued to one who had an insurable interest, is a question of general law, upon which the decisions of the courts of the state in which the assignment was made are not controlling in the federal courts.

—Gordon v. Ware Nat. Bank, 132 Fed. 444.....65 C. C. A. 580

In moving for a judgment on the pleadings in a cause on trial in a federal court it is not required by section 537, Code Civ. Proc. N. Y., that a notice of motion should be given. When the cause is regularly reached for trial, the parties are sufficiently advised that the pleadings and the proofs are before the court for consideration. The notice contemplated in said section is required only when some special application is to be made for judgment on the pleadings in advance of the trial.

—Dodge v. United States, 131 Fed. 849.....65 C. C. A. 603

§ 2. Concurrent and conflicting jurisdiction, and comity.

The fact that a bill filed in a state court incidentally prays for relief which, if granted, might interfere with the constructive possession of prop-

Digitized by Google

erty by receivers of a federal court, does not authorize the latter court to enjoin the prosecution of the suit, where the principal relief sought therein does not trench upon its jurisdiction.
—Guaranty Trust Co. v. North Chicago St. R. Co., 130 Fed. 801; Kohn v. Same, Id.....65 C. C. A. 65

The pendency in a federal court of a creditors' suit against a street railroad company, for which a receiver has been appointed, but whose road is being operated under a 99-year lease, by a receiver of the lessee appointed by the same court in another creditors' suit against such lessee, does not exclude the jurisdiction of a state court to entertain a suit by stockholders to enjoin the delivery of an amended lease which has been agreed to by the company's directors, extending the term for a long period at a greatly reduced rental, and releasing stocks deposited in trust by the lessee to secure its performance, on the ground that such extension is ultra vires, and was obtained by the lessee by secretly and fraudulently securing control of the board of directors, and also to enjoin the lessee from voting certain stock for the ratification of such lease, since such suit does not interfere with the possession of the property by the federal court, nor with the receivers in its management, nor affect any issue which can be adjudicated under the pleadings in the creditors' suit; and the federal court is without jurisdiction to enjoin the prosecution of such suit on petition filed in the creditors' suit by the company defendant.
—Guaranty Trust Co. v. North Chicago St. R. Co., 130 Fed. 801; Kohn v. Same, Id.....65 C. C. A. 65

A corporation's franchise having expired by limitation, and its assets having been delivered to a trust company appointed as liquidator of its affairs, minority stockholders filed a bill in the state court for an inspection of its books, the ascertainment of its debts and liabilities, together with a sale and distribution of its assets, and other equitable relief. The corporation and its majority stockholders appeared in such suit, and pending a motion therein for an inspection of the books a creditor of the corporation obtained a collusive judgment in the federal court by confession, and obtained the return of an execution unsatisfied, and immediately filed a creditors' bill for the appointment of a receiver in the federal court, who, when appointed, took possession of the assets, which the federal court refused to surrender to a receiver subsequently appointed by the state court. *Held*, that the state court had first acquired jurisdiction of the subject-matter of the administration of such corporation's assets, though it had not first taken physical control thereof, and hence was entitled to their surrender by the receiver of the federal court.
—Louisville Trust Co. v. Knott, 130 Fed. 820.....65 C. C. A. 158

The fact that the plaintiff in a suit in the federal court, by reason of diverse citizenship, was entitled to sue therein for the establishment of his claim, did not entitle him to have the assets of the corporation administered in such court, since it would be presumed that full recognition would be accorded to his judgment by the state court.
—Louisville Trust Co. v. Knott, 130 Fed. 820.....65 C. C. A. 158

Under 2 Code Civ. Proc. S. C. § 48, which provides that, "when any probate court shall have first taken cognizance of the settlement of the estate of a deceased person such court shall have jurisdiction of the disposition and settlement of all the personal estate of such deceased person to the exclusion of all other probate courts," that court first "takes cognizance of the settlement" of an estate which first grants letters thereon, which is the first judicial act in the proceeding, the petition being ex parte, and the issuance of citation thereon ministerial.
—Phœnix Bridge Co. v. Castleberry, 131 Fed. 175....65 C. C. A. 481

CREDITORS.

See "Bankruptcy"; "Fraudulent Conveyances."

Digitized by Google

CREDITORS' SUIT.

Remedies in cases of fraudulent conveyances, see "Fraudulent Conveyances," § 1.

CRIMINAL LAW.

Consolidation of indictments as affecting number of peremptory challenges allowed defendant, see "Jury," § 1.
Offenses against customs laws, see "Customs Duties," § 8.
Offenses against postal laws, see "Post Office," § 1.

§ 1. **Appeal and error, and certiorari.**

Peremptory requests to charge, based upon a partial statement of the facts, or which are not properly qualified to render them applicable to the facts shown in evidence, are ineffectual to sustain assignments of error based on their refusal, and will not be considered by the appellate court unless in exceptional cases.
—Betts v. United States, 132 Fed. 228.....65 C. C. A. 452

Assignments of error, stated in general terms, and which are discussed in the brief of plaintiff in error in such general language as to cast upon the court the burden of searching the record to ascertain the precise propositions of law relied on and the facts which render them applicable, will, ordinarily, not be considered.
—Betts v. United States, 132 Fed. 228.....65 C. C. A. 452

CROPS.

Insurance against fire, see "Insurance," § 3.

CUSTOMS AND USAGES.

Barring recovery of amount collected on cashier's draft, see "Banks and Banking," § 2.
Proof of, to vary terms of written contract, see "Evidence," § 3.

CUSTOMS DUTIES.

§ 1. **Validity, construction, and operation of customs laws in general.**

The provision in section 20, Customs Administrative Act June 10, 1890, (chapter 407, 26 Stat. 140 [U. S. Comp. St. 1901, p. 1950]), that merchandise in bonded warehouses may be withdrawn for consumption "on payment of the duties and charges to which it may be subject by law at the time of said withdrawal," means such payment as the merchandise would be subject to if imported at the time of withdrawal.
—Mosle v. Bidwell, 130 Fed. 334.....65 C. C. A. 533

Where, for a period of years covering the operation of several tariff acts, the Secretary of the Treasury has made regulations for carrying out certain provisions in those acts, it is to be presumed that subsequent legislation by Congress was enacted with reference to such regulations.
—United States v. Bartram Bros., 131 Fed. 833; Same v. Benjamin H. Howell, Son & Co., Id.; Same v. American Sugar Refining Co., Id. .....65 C. C. A. 557

In construing the provision in paragraph 209, Tariff Act July 24, 1897, c. 11, § 1, Schedule E, 30 Stat. 168 [U. S. Comp. St. 1901, p. 1647], regulating duty on sugars according to the polariscopic test, *held* that the expressions therein, "testing by the polariscope" and "shown by the polariscopic test," are not used with any special trade meaning that would confine them

Digitized by Google

to a particular method of conducting such test, but import an intention on the part of Congress that the method adopted should be the one best calculated to make a scientific determination.
—United States v. Bartram Bros., 131 Fed. 833; Same v. Benjamin H. Howell, Son & Co., Id.; Same v. American Sugar Refining Co., Id. .....65 C. C. A. 557

§ 2. Entry and appraisal of goods, bonds, and warehouses.
Under the general power of the Secretary of the Treasury to make customs regulations not inconsistent with law, granted by section 251, Rev. St. U. S. [U. S. Comp. St. 1901, p. 138], it is competent for that officer to prescribe the method of "testing by the polariscope" the sugars dutiable according to such test under paragraph 209, Tariff Act July 24, 1897, c. 11, § 1, Schedule E, 30 Stat. 168 [U. S. Comp. St. 1901, p. 1647]; and so long as he acts in good faith, and it does not appear that his regulations operate to make the polariscopic test less accurate than when Congress adopted it, the courts should not interfere with the administrative details confided to him.
—United States v. Bartram Bros., 131 Fed. 833; Same v. Benjamin H. Howell, Son & Co., Id.; Same v. American Sugar Refining Co., Id. .....65 C. C. A. 557

§ 3. Violations of customs laws.
In construing the provision in paragraph 697, Tariff Act July 24, 1897, c. 11, § 2, Free List, 30 Stat. 202 [U. S. Comp. St. 1901, p. 1689], that $100 in value of articles purchased abroad by returning residents of the United States may be admitted free of duty, *held* that it is the passengers' duty to enter and declare the value of such articles, whether they cost more than $100 or not, and that when not so declared they are subject to forfeiture under section 2802, Rev. St. U. S. [U. S. Comp. St. 1901, p. 1873].
—Dodge v. United States, 131 Fed. 849.....65 C. C. A. 603

In construing section 2802, Rev. St. U. S. [U. S. Comp. St. 1901, p. 1873], providing for the forfeiture of "any article subject to duty * * * found in the baggage of persons arriving in the United States, which was not at the time of making the entry for such baggage mentioned to the collector before whom the entry was made," *held*, that fraudulent intent is not an ingredient of the cause of forfeiture; also, that dutiable articles found in the handbag of a passenger after said passenger had entered other dutiable articles were subject to the enforcement of the penalties prescribed by said section.
—Dodge v. United States, 131 Fed. 849.....65 C. C. A. 603

DAMAGES.

Expert testimony relating to, see "Evidence," § 4.
Reversal for direction of verdict for defendant where plaintiff is entitled to nominal damages, see "Appeal and Error," § 10.

Damages for particular injuries.

See "Trespass," § 1.
Appeal for delay, see "Costs," § 2.
Breach by seller of contract for sale of goods, see "Sales," § 3
Breach of contract, see "Sales," § 2.
Transmission of libelous messages by telegraph company, see "Telegraphs and Telephones," § 1.
Unfair competition, see "Trade-Marks and Trade-Names," § 1.

§ 1. Grounds and subjects of compensatory damages.
Where, in an action for breach of a contract to manufacture and sell certain machinery, plaintiff showed that the average profits made during the 16 months in which the contract was performed was $911 per month, a verdict allowing plaintiff profits at that rate during the 8 remaining

Digitized by Google

months of the contract period after breach was not objectionable on the ground that such profits were remote and speculative.
—Lazier Gas Engine Co. v. Du Bois, 130 Fed. 834....65 C. C. A. 172

Where, at the time a contract for the manufacture and sale of machinery was made, no notice was given to the seller that the machinery was to be used by a corporation to supply tin cans under an existing contract, the seller, on a breach of the contract, was not liable for alleged lost profits, based on the opinion and estimates of experts respecting the producing capacity of the contract machinery, and the probable output of the factory in which it was to be used, if the factory had been supplied with such machinery, properly installed, and operated to its capacity, etc.; such profits being speculative and uncertain.
—E. W. Bliss Co. v. Buffalo Tin Can Co., 131 Fed. 51..65 C. C. A. 289

§ 2. **Measure of damages.**
A bidder for furnishing supplies to the Post-Office Department, who, on the acceptance of his bid, failed to execute the contract in accordance with his guaranty, cannot be held liable for the difference between the contract price of certain articles and the price paid by the department to the public printer for such articles three months after the default, where it is shown that at the time of such default and for several weeks thereafter the articles could have been purchased in the market for less than the contract price, and especially where it does not appear that the price subsequently paid was the market price, which alone could fix the measure of damages.
—United States v. Withers, 130 Fed. 696.....65 C. C. A. 16

§ 3. **Pleading, evidence, and assessment.**
In a case where the jury are not warranted in awarding exemplary damages, evidence to show defendant's wealth is inadmissible.
—Western Union Tel. Co. v. Cashman, 132 Fed. 805..65 C. C. A. 607

DEATH.

Caused by negligence in general, see "Negligence," § 1.
Of party to action ground for abatement, see "Abatement and Revival," § 1.

DEBTOR AND CREDITOR.

See "Bankruptcy"; "Fraudulent Conveyances."

DECEIT.

See "Fraud."

DECLARATIONS.

As evidence, see "Evidence," § 2.

DECREE.

In admiralty, see "Admiralty," § 2.

DEEDS.

Acknowledgment of execution, see "Acknowledgment."
In fraud of creditors, see "Fraudulent Conveyances."
Of trust, see "Mortgages."

Digitized by Google

DELIVERY.

Of goods shipped by vessel, see "Shipping," § 1.

DEMURRAGE.

See "Shipping," § 2.

DEPORTATION.

Effect on deportation proceedings of marriage of alien woman to citizen, see "Citizens."

DILIGENCE.

Of party asking relief, see "Specific Performance," § 1.

DIRECTING VERDICT.

In civil actions, see "Trial," § 1.

DISCHARGE.

From indebtedness, see "Bankruptcy," § 8.

DISCRETION OF COURT.

Adjustment of conflicting claims in admiralty, see "Admiralty," § 1.
Review in civil actions, see "Appeal and Error," §§ 3, 9.

DISMISSAL AND NONSUIT.

Appealability of orders on dismissal, see "Appeal and Error," § 3.
Dismissal of appeal or writ of error, see "Appeal and Error," §§ 7, 8.
Dismissal of proceeding in bankruptcy, see "Bankruptcy," § 1.

§ 1. Involuntary.

The provision of Act July 20, 1892, c. 209, § 4, 27 Stat. 252 [U. S. Comp. St. 1901, p. 707], authorizing the court to dismiss an action brought thereunder in forma pauperis if satisfied that the alleged cause of action is frivolous or malicious, applies to cases where the affidavit of poverty is filed simultaneously with the filing of the writ.
—O'Connell v. Mason, 132 Fed. 245.....65 C. C. A. 541

Aside from any statutory authority, a court of general jurisdiction has power on its own motion to dismiss an action as frivolous where the pleadings present no cause of action recognized by the law.
—O'Connell v. Mason, 132 Fed. 245.....65 C. C. A. 541

DISTRIBUTION.

Of estate of bankrupt, see "Bankruptcy," § 2.

DIVERSE CITIZENSHIP.

Ground of jurisdiction of United States courts, see "Removal of Causes," § 1.

Digitized by Google

DUE PROCESS OF LAW.

See "Constitutional Law," § 2.

DUTIES.

Customs duties, see "Customs Duties."

ELECTION OF REMEDIES.

Where, after defendants notified plaintiffs that they would not accept phosphate rock contracted for, plaintiffs gave notice of their intention to store or resell such rock, such notice did not constitute such an election by plaintiffs to treat the contract as still subsisting for the benefit of the defendants as precluded plaintiffs from maintaining an action to recover damages for breach of the contract, on the theory that it was terminated by defendants' notice of their refusal to accept.
—Habeler v. Rogers, 131 Fed. 43.....65 C. C. A. 281

EMINENT DOMAIN.

Public improvements by municipalities, see "Municipal Corporations," § 1.

§ 1. Nature, extent, and delegation of power.

A maximum rate to be charged by an irrigation company for water furnished to consumers, fixed by county commissioners as provided by statute, is not unconstitutional, as depriving the company of its property without compensation, because it will not produce sufficient revenue above expenses and fixed charges to pay a reasonable income on the money invested by the company, where its plant was constructed on a larger scale and at a greater expense than necessary to supply its present customers, and was intended to supply a greater number than it has as yet obtained.
—Boise City Irrigation & Land Co. v. Clark, 131 Fed. 415.....
65 C. C. A. 390

EMPLOYES.

See "Master and Servant."

EQUITY.

Appealability of orders on dismissal of bill in equity, see "Appeal and Error," § 3.
Claims against bankrupt enforceable only in equity, see "Bankruptcy," § 2.
Determination of cause on appeal, see "Appeal and Error," § 10.

Particular subjects of equitable jurisdiction and equitable remedies.

See "Fraudulent Conveyances"; "Injunction"; "Specific Performance."
Improper loaning of bank's assets, see "Banks and Banking," § 3.
Suits for infringement of patents, see "Patents," § 3.

§ 1. Jurisdiction, principles, and maxims.

While a court which has obtained possession of street railroad property through receivers appointed in separate creditors' suits against the lessor and lessee of such property has power to settle differences between the lessor and lessee when arising in the administration of the two estates, it has no power to compel the lessor to execute a new lease extending the term from 99 to 984 years, and materially reducing the rental during such

Digitized by Google

long term; its custody of the property being temporary only, for the purpose of conserving it, if not sold, until creditors are paid.
—Guaranty Trust Co. v. North Chicago St. R. Co., 130 Fed. 801; Kohn v. Same, Id.....65 C. C. A. 65

§ 2. **Pleading.**
Where the right of each of several depositors of an insolvent national bank to recover against several of the bank's directors, made parties to the bill, was based on the same theory, the bill was not multifarious.
—Boyd v. Schneider, 131 Fed. 223.....65 C. C. A. 209

ERROR, WRIT OF.

See "Appeal and Error."

ESTOPPEL.

By judgment, see "Judgment," § 3.
To deny liability on account stated, see "Account Stated."
To enforce maritime lien, see "Maritime Liens," § 1.

EVIDENCE.

Admissibility in evidence of unstamped written instruments, see "Internal Revenue."
Adoption of decisions of state courts as rules of decision in federal courts, see "Courts," § 1.
Harmless error in rulings on, see "Appeal and Error," § 9.
Presentation in lower court of objections for purpose of review, see "Appeal and Error," § 4.
Questions of fact for jury, see "Trial," § 1.
Questions presented in record for purpose of review, see "Appeal and Error," § 6.
Review on appeal or writ of error, see "Appeal and Error," § 9.

As to particular facts or issues.

See "Damages," § 3; "Statutes," § 2.
Acts of bankruptcy, see "Bankruptcy," § 1.

In actions by or against particular classes of parties.

See "Master and Servant," § 5.

In particular civil actions or proceeaings.

Admiralty, see "Collision," § 5.
For breach of contract, see "Sales," § 2.
For infringement of patent, see "Patents," § 3.
For injury to tow, see "Towage."
For loss of or injury to goods shipped, see "Shipping," § 1.
For personal injuries, see "Master and Servant," § 5; "Railroads," § 2.
On insurance policy, see "Insurance," § 9.

In criminal prosecutions.

Deportation proceedings, see "Aliens," § 1.

§ 1. **Best and secondary evidence.**
Rev. St. § 3303 [U. S. Comp. St. 1901, p. 2157], requires every distiller to keep a book in which shall be recorded certain facts specified with reference to his business; and section 3318 [U. S. Comp. St. 1901, p. 2164], after providing for the books to be so kept, declares that every person required to keep the books prescribed by such section shall on or before the 10th day of each month make a full and complete transcript of all

Digitized by Google

the entries made therein during the month preceding, and, after verifying the same by oath, shall forward it to the collector of the district in which he resides. *Held*, in an action by a distiller to recover internal revenue taxes alleged to have been wrongfully imposed, that evidence that plaintiff's record book had been taken from him and carried to a certain collector's office, after which it was taken to the revenue agent's office at G., and was last seen in 1893 or 1894, three years after the final disposition of a criminal case against plaintiff, and that search had been made in the office of the revenue agent, where it had last been seen, without proof that a search had been made in the collector's office for the transcript on which the assessment made was required to be filed, nor in the office of the clerk where the original record had been used in evidence in the criminal proceeding, was insufficient to justify the admission of oral evidence of contents of such record.

—Brown v. Harkins, 131 Fed. 63.....65 C. C. A. 301

§ 2. Admissions.

Declarations of an officer, in making a levy, going to show his knowledge that the property levied on was owned by a third person, or that he was put on inquiry as to such ownership, are admissible in an action in behalf of such third person for the conversion.

—McKnight v. United States, 130 Fed. 659.....65 C. C. A. 37

In an action by the United States, as guardian of an Indian woman, for the conversion by defendant of cattle issued to her by the government for stock-raising purposes, and which she had no power to dispose of, declarations by her as to the ownership of the cattle are inadmissible against the plaintiff.

—McKnight v. United States, 130 Fed. 659.....65 C. C. A. 37

In an action against a sheriff and an attaching creditor for conversion of property of the debtor's wife by its seizure and sale under the attachment, declarations of the husband to the creditor that the property was in his possession and that he was the owner are not admissible to prove his ownership as against plaintiff, especially where such declarations were made prior to the suit, and were therefore not a part of the res gestæ.

—McKnight v. United States, 130 Fed. 659.....65 C. C. A. 37

§ 3. Parol or extrinsic evidence affecting writings.

Where an order of court appointing receivers for a corporation was in writing, parol evidence of the judge who made the order was inadmissible to show the grounds thereof.

—Blue Mountain Iron & Steel Co. v. Portner, 131 Fed. 57.....
65 C. C. A. 295

Proof of a custom of doing business between the parties is not admissible to contradict or vary the contract made by a bill of lading, which is plain and unambiguous in its terms.

—Portland Flouring Mills Co. v. British & Foreign Marine Ins. Co., 130 Fed. 860.....65 C. C. A. 344

§ 4. Opinion evidence.

Where plaintiff, who was the owner of a distillery, on refusal of defendants to further perform a contract by which they agreed to take and pay for the entire product of his distillery for a term of years, excepting a certain number of barrels each year, brought suit for breach of the contract to recover as damages the profit he would have made during the remainder of the term, the defendants were entitled to a reasonable deduction for the less time engaged, and a release from the trouble, risk, and responsibility attending the full execution of the contract; and on the question as to the amount of such deduction the testimony of experts familiar with the business in the locality where plaintiff's distillery was situated was admissible, if properly limited to the particular matters as to which the witnesses had experience.

—Allen v. Field, 130 Fed. 641.....65 C. C. A. 19

Digitized by Google

Where a chain used in unloading a vessel, the breaking of which caused the death of a stevedore, had been subjected both to test and inspection shortly before the injury, and did successful service for at least one day before it broke, evidence of two expert witnesses that in their opinion a crack must have been present in the chain, and could have been seen by a careful observer, was insufficient to establish that the chain was dangerously defective at the time it was inspected.
—Johnston v. Turnbull, 130 Fed. 769.....65 C. C. A. 157

The question whether a written instrument is a duplicate of another, within the meaning of a statute, is not one upon which expert testimony is competent, but is one for the court.
—Wright v. Michigan Cent. R. Co., 130 Fed. 843.....65 C. C. A. 327

EXCEPTIONS.

For purpose of review in admiralty, see "Admiralty," § 3.
Taking exceptions at trial, see "Trial," § 2.

EXEMPLARY DAMAGES.

For trespass, see "Trespass," § 1.

EXPERT TESTIMONY.

In civil actions, see "Evidence," § 4.

EX POST FACTO LAWS.

Retroactive operation of statutes, see "Statutes," § 1.

EXPRESS COMPANIES.

Express messenger as passenger, see "Carriers," § 2.

FEDERAL COURTS.

See "Courts," § 1.

FEDERAL QUESTIONS.

Ground for jurisdiction, see "Courts," § 1.

FEES.

Of attorney for bankrupt, see "Bankruptcy," § 2.

FELLOW SERVANTS.

See "Master and Servant," § 2.

FIDELITY INSURANCE.

See "Insurance," § 4.

Digitized by Google

FINAL JUDGMENT.

Appealability, see "Appeal and Error," § 3.

FINDINGS.

By referee in bankruptcy, see "Bankruptcy," § 2.

FIRE INSURANCE.

See "Insurance."

FISH.

Construction and operation of contract relating to, see "Contracts," § 2.

FOG.

Collision of vessel, see "Collision," § 3.

FORCIBLE ENTRY AND DETAINER.

§ 1. Civil liability.

Under a Kentucky statute providing a summary proceeding to recover possession of lands from which plaintiff has been forcibly ousted, and defining a forcible entry as an entry without the consent of the person having the actual possession (Civ. Code Ky. 1900, § 452), the person in possession is not required to resist dispossession by actual force, but is entitled to the remedy where he yields to threatened violence.
—Clark v. Langenbach, 130 Fed. 755.....65 C. C. A. 181

Under the Kentucky statute providing a summary proceeding to recover possession of lands from which plaintiff has been forcibly ousted, a lessee in an oil lease who was actually in possession for the purposes of his lease, under claim of right, when he was forcibly dispossessed by defendants, claiming under a subsequent lease, may recover his possession, although the owner and lessor was, in subordination to the lease, also in possession for general purposes, and regardless of the validity of his lease, the question of title not being an issue in such proceeding.
—Clark v. Langenbach, 130 Fed. 755.....65 C. C. A. 181

Under a Kentucky statute providing a summary proceeding to recover possession of lands from which plaintiff has been forcibly ousted, in an action by a lessee who was actually in possession, for the purposes of his lease, under claim of right, when he was forcibly dispossessed by defendants, his lease was admissible in evidence for the purpose of showing the extent of his possession taken thereunder.
—Clark v. Langenbach, 130 Fed. 755.....65 C. C. A. 181

FORECLOSURE.

Of mortgage, see "Railroads," § 1.
Persons concluded by decree in foreclosure proceedings, see "Judgment," § 3.

FOREIGN INSURANCE COMPANIES.

See "Insurance," § 1.

Digitized by Google

FOREIGN JUDGMENTS.

See "Judgment," § 4.

FORFEITURES.

For violations of customs laws, see "Customs Duties," § 3.
Of insurance, see "Insurance," § 5.

FORMA PAUPERIS.

Dismissal of action brought in forma pauperis, see "Dismissal and Nonsuit," § 1.

FORMER ADJUDICATION.

See "Judgment," §§ 2, 3.

FORMS OF ACTION.

See "Trespass," § 1; "Trover and Conversion."

FRANCHISES.

To water company, see "Waters and Water Courses," § 1.

FRAUD.

See "Fraudulent Conveyances."
Ground for refusal to discharge bankrupt, see "Bankruptcy," § 3.
In subscriptions to corporate stock, see "Corporations," § 2.
Unfair competition, see "Trade-Marks and Trade-Names," § 1.

§ 1. Deception constituting fraud, and liability therefor.

A mortgage to defendant, as trustee, securing bonds executed by a timber company, provided that the bonds should not be valid until certified by the defendant, and that before issuing any of the bonds there should be deposited with defendant, by the mortgagor, a sum of money sufficient to pay off the first four coupons (two years' interest) on the bonds. The mortgagor, after defendant had accepted the trust, pledged 100 of the bonds to plaintiff, and gave plaintiff an order on defendant therefor, whereupon defendant delivered to plaintiff a letter reciting receipt of the order, that the bonds were part of an issue described on the mortgagor's property, the title to which, etc., had been examined and approved by defendant, and that the papers were then in its possession, and stating, "We will hold the one hundred bonds subject to your order." *Held*, that defendant's promise to hold such "bonds" constituted a representation that defendant had certified the bonds, and received the money in compliance with the conditions precedent to their validity, the falsity of which representation was sufficient to entitle plaintiff to recover damages suffered by its having acted on the faith thereof, in an action against defendant for deceit.

—Sprigg v. Commonwealth Title Ins. & Trust Co., 131 Fed. 5..... 65 C. C. A. 243

Digitized by Google

FRAUDULENT CONVEYANCES.

Ground for refusal to discharge bankrupt, see "Bankruptcy," § 3.

§ 1. **Remedies of creditors and purchasers.**
A simple-contract creditor cannot maintain a bill in equity in the federal Circuit Court to set aside fraudulent conveyances of his debtor's property, and to have the same administered by a receiver.
—Viquesney v. Allen, 131 Fed. 21.....65 C. C. A. 259

FREIGHT.

See "Carriers," § 1.
Carriage of goods by vessel, see "Shipping," § 1.

GOOD FAITH.

Of party asking equitable relief, see "Specific Performance," § 1.

GRANTS.

Of public lands, see "Public Lands."

GUARDIAN AND WARD.

Admissions by ward as evidence against guardian, see "Evidence," § 2.

HABEAS CORPUS.

Marriage of alien woman to citizen pending proceedings for deportation as ground for habeas corpus, see "Citizens."

HARMLESS ERROR.

In civil actions, see "Appeal and Error," § 9.

HEARING.

In admiralty, see "Admiralty," § 1.

HIGHWAYS.

Accidents at railroad crossings, see "Railroads," § 2.

HOMESTEAD.

Acknowledgment to declaration of homestead, see "Acknowledgment," § 1.

Digitized by Google

HUSBAND AND WIFE.

Acknowledgments by married women, see "Acknowledgment," § 1.
Marriage of citizen to alien woman, see "Citizens."
Marriage of Indian woman to citizen, see "Indians."
Wife as creditor entitled to prove claim against husband's estate in bankruptcy, see "Bankruptcy," § 2.

IMPAIRING OBLIGATION OF CONTRACT.

See "Constitutional Law," § 1.

IMPLIED CONTRACTS.

See "Account Stated."

IMPORTS.

Duties, see "Customs Duties."

IMPROVEMENTS.

Public improvements, see "Municipal Corporations," § 1.

INDIANS.

Admissions as evidence in action by United States as guardian of Indian, see "Evidence," § 2.
Liability of sheriff for wrongful levy on property of, see "Sheriffs and Constables," § 1.
Mining locations on Indian reservations, see "Mines and Minerals," § 1.

Under the act of Congress ratifying agreements made with Indian tribes in Montana, including the Blackfeet, which provide, inter alia, for the issuance of cattle to such Indians for stock-raising purposes, and that all such cattle and their increase shall bear the brand of the Indian Department, and shall not be sold, exchanged, or slaughtered, except by consent of the agent in charge, an Indian to whom such cattle are issued acquires only a conditional ownership for the purposes stated in the act, and it is the right and duty of the United States to protect such ownership, for which purpose it may maintain an action in a federal court in behalf of an Indian from whom cattle so issued have been unlawfully taken; and such right is not affected by the fact that an Indian in whose behalf such an action is brought is a woman who is married to a white man, and has thereby become a citizen of the United States, but who remains on the reservation with her tribe—it being expressly provided by Act Aug. 9, 1888, c. 818, 25 Stat. 392, 1 Supp. Rev. St. p. 608, that such marriage and citizenship shall not "impair or in any way affect the right or title of such married woman to any tribal property or interest therein."
—McKnight v. United States, 130 Fed. 659.....65 C. C. A. 37

The President of the United States, by proclamation, has power to reserve a portion of the unoccupied public lands of the United States for an Indian reservation, notwithstanding Rev. St. § 2319 [U. S. Comp. St. 1901, p. 1424], declaring all mineral deposits in the public lands of the United States and the lands containing the same open to exploration and purchase.
—Gibson v. Anderson, 131 Fed. 39.....65 C. C. A. 277

Digitized by Google

INDICTMENT AND INFORMATION.

Consolidation of indictments as affecting number of peremptory challenges allowed defendant, see "Jury," § 1.

IN FORMA PAUPERIS.

Dismissal of action brought in forma pauperis, see "Dismissal and Nonsuit," § 1.

INFRINGEMENT.

Of patent, see "Patents," § 3.
Of trade-mark, see "Trade-Marks and Trade-Names," § 1.

INJUNCTION.

Appealability of orders relating to, see "Appeal and Error," § 3.
Conclusiveness of adjudication in suit for injunction, see "Judgment," § 3.
Restraining unfair competition, see "Trade-Marks and Trade-Names," § 1.

§ 1. **Subjects of protection and relief.**
Equity has jurisdiction to restrain the violation of an agreement entered into as a part of the sale of a business, by which the persons interested therein agreed not to again engage in business in certain localities for a definite time, because of the difficulty in estimating the damages accruing, and to prevent a multiplicity of suits.
—Davis v. A. Booth & Co., 131 Fed. 31.....65 C. C. A. 269

INSOLVENCY.

See "Bankruptcy."
Of corporation, see "Corporations," § 5.
Of national bank, see "Banks and Banking," § 3.

INSTRUCTIONS.

In civil actions, see "Trial," § 2.

INSURANCE.

Adoption by federal courts of state laws as rules of decision relating to, see "Courts," § 1.
Effect of insurance on liability of carrier for loss of or injury to goods, see "Carriers," § 1.

§ 1. **Control and regulation in general.**
A provision of a marine policy that all claims thereunder should be void unless prosecuted within 12 months from the date of the disaster was applicable to a suit against insurance brokers issuing certain policies on behalf of foreign companies which had not complied with the laws of Pennsylvania, under Act Pa. May 1, 1876 (P. L. 66) § 48, declaring that any agent of a foreign insurance company which has not complied with Pennsylvania laws shall be personally liable "on all contracts of insurance" made by or through him on behalf of any such company.
—Rothschild v. Adler-Weinberger S. S. Co., 130 Fed. 866.....
65 C. C. A. 350

Digitized by Google

Act Pa. May 1, 1876 (P. L. 66) § 48, declaring that the agent of any insurance company of any other state or government which does not comply with the laws of Pennsylvania shall be personally liable on all contracts of insurance made by or through him, directly or indirectly, for or on behalf of the company, applies only to contracts of insurance on property in Pennsylvania.
—Rothschild v. Adler-Weinberger S. S. Co., 130 Fed. 866..... 65 C. C. A. 350

§ 2. Insurable interest.

The issue of a policy of life insurance to one who has no interest as a relative, dependent, creditor, or otherwise, in the life of the insured, and who pays the premiums for the chance of recovering upon the policy, is against public policy, and the contract is void, because the interest of the holder is to shorten, rather than to lengthen, the life of the insured, and his maintenance of the policy is of the nature of a wager.
—Gordon v. Ware Nat. Bank, 132 Fed. 444.....65 C. C. A. 580

A creditor has an insurable interest in the life of his debtor, and the issue or pledge of a policy upon his life as collateral security for the payment of his debt is valid.
—Gordon v. Ware Nat. Bank, 132 Fed. 444.....65 C. C. A. 580

The pledgee of a policy of life insurance has the right and power to sell the policy to the highest bidder for the purpose of realizing money to pay the debt which it secures, and both immediate and remote assignees under such a sale take good title to the policy and to its proceeds, although they have no insurable interest in the life insured by the policy.
—Gordon v. Ware Nat. Bank, 132 Fed. 444.....65 C. C. A. 580

An insurable interest in the assignee is not requisite to the validity of the assignment of a policy of life insurance which was lawfully issued to one who had such an interest, unless the assignment was made in bad faith as a cover for the issue of a wager policy. But the use of an assignment immediately upon the issue of a policy to evade the rule that the issue of a policy to one without an insurable interest renders it void avoids the assignment.
—Gordon v. Ware Nat. Bank, 132 Fed. 444.....65 C. C. A. 580

§ 3. The contract in general.

Where complainants accepted an insurance certificate insuring their crop against fires subject to all the terms and conditions of a certain open policy in defendant's possession made a part of the certificate, plaintiffs were bound by the provisions of such open policy though they had no knowledge thereof.
—Conner v. Manchester Assur. Co. of Manchester, England, 130 Fed. 743 .....65 C. C. A. 127

A correct photographic copy of an application for life insurance, reduced in size, but legible, attached to the policy, constituted a compliance with the Pennsylvania laws (Act May 11, 1881, P. L. 20) requiring insurance companies to attach a copy of the application to policies where such application is referred to and made a part of the policy.
—Arter v. Northwestern Mut. Life Ins. Co., 130 Fed. 768..... 65 C. C. A. 156

§ 4. Avoidance of policy for misrepresentation, fraud, or breach of warranty or condition.

Where a fidelity bond securing a building and loan association against the embezzlement of its secretary provided that all the representations made by the employer to the surety were warranted by the employer to be true; that the employé had not, to the knowledge of the employer or its officers, been in arrears or a defaulter, and the association stated that its secretary was not at that time in debt to it; that he had property, funds, securities, and valuables on hand to balance his accounts—such statement did not constitute a warranty that the secretary was not indebted to the

Digitized by Google

association at the time as a fact, but only that he was not so indebted. etc., to the knowledge of the association or its officers.

—American Bonding Co. v. Spokane Building & Loan Soc., 130 Fed. 737.....65 C. C. A. 121

A stipulation in a fire policy that the insurance company should not be liable for loss caused, directly or indirectly, by order of any civil authority, is not a warranty within Cal. Civ. Code, §§ 2607, 2608, providing that a statement in a policy of a matter relating to the thing insured or to the risk as a fact, and a statement which imports that it is intended to do or not to do a thing which materially affects the risk, is a warranty.

—Conner v. Manchester Assur. Co. of Manchester, England, 130 Fed. 743 .....65 C. C. A. 127

§ 5. Forfeiture of policy for breach of promissory warranty, covenant, or condition subsequent.

One of several policies insuring plaintiff's merchandise to the extent of actual loss provided that in case of disagreement as to the amount of loss the same should be ascertained by an appraisement, and that the loss should not be payable, or an action maintained to recover the same, until after 60 days after due notice, ascertainment, estimate, and satisfactory proof of loss had been received by the company in accordance with the terms of the policy; that the insured, as often as required, should exhibit to any person designated by the company all that remained of any property described in the policy, and should submit to examinations under oath, and produce books of account, etc., and that it should be optional with the company to take all or any part of the articles at such ascertained or appraised value, and to replace the property lost or damaged with other of like kind or quality at any reasonable time within 30 days after the receipt of proofs of loss or the giving notice of his intention to do so. After loss the property was separated as required, and, the parties failing to agree, insured, after filing, but before the receipt of proofs of loss by the insurers, and over their protest, advertised and sold the property remaining. *Held*, that such sale deprived the insurers of their substantial rights to further examination of the goods after proof of loss furnished, to adjust the loss by appraisement, and to replace the goods damaged with other goods of like character, and therefore precluded a recovery on the policy.

—Astrich v. German-American Ins. Co., 131 Fed. 13..65 C. C. A. 251

§ 6. Estoppel, waiver, or agreements affecting right to avoid or forfeit policy.

Where plaintiff, having several policies, some of which insured both merchandise and fixtures and others insured fixtures only, had a conversation with one of the adjusters of the companies in interest after loss and after a forfeiture as to the merchandise had been incurred, in which such adjuster requested plaintiff to furnish proofs of loss as to the fixtures and furniture, such request, though complied with by plaintiff's sending such proof to all of the insurers, did not operate as a waiver of the forfeiture as to the merchandise insured by an insurer whose policy covered merchandise only.

—Astrich v. German-American Ins. Co., 131 Fed. 13..65 C. C. A. 251

§ 7. Risks and causes of loss.

Where the supervisors of a county ordered fires to be started on certain pasture land for the purpose of destroying insects which were injurious to fruit crops, etc., under Cal. St. 1897, pp. 465, 466, c. 277, authorizing such supervisors to provide for the destruction of insects and to make sanitary regulations not in conflict with general laws, such supervisors had de facto authority to start the fire, which was sufficient to relieve an insurer of grain destroyed thereby, under a provision in the policy that insurer should not be liable for any loss occasioned by order of any civil

Digitized by Google

authority, though the fire was started on other property, and the burning of plaintiff's grain was occasioned by the fire getting beyond control.
—Conner v. Manchester Assur. Co. of Manchester, England, 130 Fed. 743 .....65 C. C. A. 127

§ 8. **Payment or discharge, contribution, and subrogation.**

Where a ship sunk by collision and abandoned to the insurer, being an actual total loss, is insured by a valued policy, and the stipulated sum is paid to the owner, who subsequently recovers her actual value, which exceeds her insurance value, as damages from the vessel responsible for the collision, the insurer is only entitled to be reimbursed from such recovery by receiving back the amount it has paid out, with interest, and the insured is entitled to the remainder in payment of his uncompensated loss.
—The Livingstone, 130 Fed. 746.....65 C. C. A. 610

Neither the abandonment to the insurer of a vessel sunk in collision nor a bill of sale conveying the same vests the insurer with a right of action against the vessel in fault for the collision, which can exist only on the principle of subrogation arising out of the performance of the insurance contract.
—The Livingstone, 130 Fed. 746.....65 C. C. A. 610

§ 9. **Actions on policies.**

Where in an action on a policy the declaration alleged that, on the maturity of a premium, insured paid and defendant accepted a certain amount as a credit thereon, and extended credit to insured for the unpaid balance, but did not allege that any premium whatever was actually paid on that day, a provision of the policy that no premiums after the first should be considered paid unless a receipt should be given therefor signed by the president or secretary of the company, and that the payment and receipt of any premium less than a full annual premium should not have the effect to continue the policy longer than three months in case of a quarterly payment, or six months in case of a semiannual payment, was not involved.
—Battin v. Northwestern Mut. Life Ins. Co., 130 Fed. 874..... 65 C. C. A. 358

In an action on a life policy, an allegation that defendant has, in its dealings with assured, now deceased, treated the policy as in force, without stating the facts showing the nature of such dealings and treatment, was not sufficiently specific.
—Battin v. Northwestern Mut. Life Ins. Co., 130 Fed. 874..... 65 C. C. A. 358

Where a declaration on a policy of life insurance alleged that on August 20, 1901, when a certain premium of $146.80 became due and payable, insured paid on account thereof the sum of $38.75, which was accepted by defendant as a payment on account of said premium, and that a credit was given to assured for the unpaid balance, it sufficiently alleged a waiver of a provision of the policy that, if the premium shall not be paid at or before the time mentioned for payment thereof, the policy shall cease, etc.
—Battin v. Northwestern Mut. Life Ins. Co., 130 Fed. 874..... 65 C. C. A. 358

Where a clerk in the office of a firm of insurance agents, in the name of the firm and by indorsement upon a policy insuring a stock of merchandise against loss or damage by fire while located in a designated building, transferred the insurance to the same property in another location, where it was subsequently damaged by fire, acts and conversations of the agents, occurring after the fire and persuasively tending to show that they respected the transfer and treated it as obligatory, were competent and substantial evidence upon the issue whether the clerk had general authority from the agents to make such transfers, or, if not, whether this transfer

Digitized by Google

was known to and approved by them before the fire, and justified the submission of that issue to the jury.
—Thuringia Ins. Co. v. Goldsmith, 132 Fed. 456.....65 C. C. A. 677

INTENT.

Affecting liability for unfair competition, see "Trade-Marks and Trade-Names," § 1.

INTEREST.

Allowance of interest in admiralty, see "Admiralty," § 1.
Insurable interest, see "Insurance," § 2.

INTERLOCUTORY JUDGMENT.

Appealability, see "Appeal and Error," § 3.

INTERNAL REVENUE.

War Revenue Act, June 13, 1898, c. 448, § 13, 30 Stat. 454 [U. S. Comp. St. 1901, p. 2295], providing for a stamp tax on certificates attached to legal instruments, was amended by Act March 2, 1901, c. 806, § 7, 31 Stat. 941 [U. S. Comp. St. 1901, p. 2294], which, however, specifically provided for the continuing of the law with regard to the stamping of unstamped instruments subject to a stamp tax at the time they were issued; and section 14 of the original act (30 Stat. 455 [U. S. Comp. St. 1901, p. 2296]), providing that unstamped instruments should not be recorded or received in evidence, was not repealed either by Act March 2, 1901, or by Act April 12, 1902, c. 500, 32 Stat. 96 [U. S. Comp. St. Supp. 1903, p. 276], which repealed the whole of Schedule A of the original act; and Rev. St. § 13 [U. S. Comp. St. 1901, p. 6], declares that the repeal of a statute shall not release or extinguish any penalty, forfeiture, or liability incurred thereunder, unless the repealing act so expressly provides, etc. *Held*, that the repeal of the act requiring certificates to be stamped did not authorize the subsequent admission in evidence of an instrument containing an unstamped certificate of acknowledgment subject to the tax.
—Sackett v. McCaffrey, 131 Fed. 219.....65 C. C. A. 205

Since stamps required to be affixed to a notary's certificate of acknowledgment to a declaration of homestead, under War Revenue Act June 13, 1898, c. 448, § 14, 30 Stat. 455 [U. S. Comp. St. 1901, p. 2296], are required to be furnished by the person for whose benefit the instrument is furnished such tax is not objectionable on the ground that the notary, in taking the acknowledgment and indorsing his certificate, was exercising a function of the state government not subject to federal taxation.
—Sackett v. McCaffrey, 131 Fed. 219.....65 C. C. A. 205

A notary's certificate of acknowledgment attached to a declaration of homestead was subject to a stamp tax under War Revenue Act June 13, 1898, c. 448, § 13, 30 Stat. 454 [U. S. Comp. St. 1901, p. 2294], requiring documents mentioned in the schedule, and certificates of any description required by law not otherwise specified, to be stamped.
—Sackett v. McCaffrey, 131 Fed. 219.....65 C. C. A. 205

A railroad company issued bills of lading marked "Original," to each of which was attached a detachable copy, marked as such, and containing a statement thereon that it was not an original bill of lading, but merely a memorandum for filing, as an acknowledgment that a bill of lading had been issued for the goods described. *Held*, that such copies were not duplicate bills of lading, within the meaning of paragraph 6 of Schedule A of the war revenue act of June 13, 1898 (30 Stat. 458, c. 448 [U. S. Comp.

Digitized by Google

St. 1901, p. 2304]), and were not required to be stamped; nor were they rendered such by the fact that in some instances the company recognized them in making deliveries to the consignee, waiving the production of the original.
—Wright v. Michigan Cent. R. Co., 130 Fed. 843.....65 C. C. A. 327

In paragraph 6 of Schedule A of the war revenue act of June 13, 1898 (30 Stat. 458, c. 448 [U. S. Comp. St. 1901, p. 2304]), which requires a stamp to be affixed to each bill of lading, manifest, etc., "and to each duplicate thereof," the word "duplicate" is to be defined in accordance with the meaning given it generally in business, as one of two instruments, each of which is original, and intended to have the force of an obligation irrespective of the other, and not as meaning merely a copy.
—Wright v. Michigan Cent. R. Co., 130 Fed. 843.....65 C. C. A. 327

INTERNATIONAL LAW.

See "Aliens."

INTERSTATE COMMERCE.

Presentation in lower court of objections for purpose of reviewing evidence establishing interstate character of commerce, see "Appeal and Error," § 4.
Regulation, see "Commerce."

INTERVENTION.

Appealability of orders denying right to intervene, see "Appeal and Error," § 3.

INVENTION.

See "Patents."

IRRIGATION.

See "Waters and Water Courses," § 1.

JUDGES.

See "Courts."

§ 1. **Rights, powers, duties, and liabilities.**
Under the settled rule that judges of courts of general jurisdiction are not subject to civil actions by private suitors for their acts unless such acts are clearly outside the jurisdiction of the court in which they preside, a declaration does not state a cause of action, within the exception to such rule, by a mere general allegation that the acts complained of were not judicial acts, and were done without authority or jurisdiction, where the particular acts set out do not sustain such general allegation.
—O'Connell v. Mason, 132 Fed. 245.....65 C. C. A. 541

JUDGMENT.

Adoption by federal courts of state laws as rules of decision relating to collateral attack, see "Courts," § 1.
Decision in suit in admiralty, see "Admiralty," § 1.
Decree in admiralty, see "Admiralty," § 2.
In bankruptcy, see "Bankruptcy," §§ 1, 3.
Law restricting time for commencement of action to enforce judgment on contract as impairment of obligation of contract, see "Constitutional Law," § 1.

Digitized by Google

Limitation of action on, as deprivation of due process of law, see "Constitutional Law," § 2.
Limitation of actions on judgments, see "Limitation of Actions," § 1.
On appeal or writ of error, see "Appeal and Error," § 10.
On pleadings under mandate to lower court on decision on appeal, see "Appeal and Error," § 10.
Review, see "Appeal and Error."

§ 1. Collateral attack.

The jurisdiction of a court to render a judgment is always subject to collateral attack and inquiry in a court of another sovereignty in which such judgment is relied on, and in such respect federal and state courts are foreign to each other, although sitting within the same state.

—Phœnix Bridge Co. v. Castleberry, 131 Fed. 175....65 C. C. A. 481

§ 2. Merger and bar of causes of action and defenses.

Where a bill to establish complainant's right to a fund which set out the grounds of such right, and alleged its priority was taken pro confesso as to certain defendants, and a decree rendered thereon as provided in equity rule 19, after the expiration of the term such decree became conclusive against the defendants in default as to any claim which might have been set up in answer to the bill, whether or not such claim was correctly recited therein.

—Third Nat. Bank v. Atlantic City, 130 Fed. 751....65 C. C. A. 177

§ 3. Conclusiveness of adjudication.

Where whatever rights complainants acquired in the property of a street railway company were acquired after a foreclosure decree had been entered, but before the decree had been executed by a sale of the mortgaged property, under an agreement between complainants and the street railway company's receiver, and complainants were not parties to the foreclosure proceeding, they were not bound by the decree therein.

—Thompson v. Schenectady Ry. Co., 131 Fed. 577....65 C. C. A. 325

In an action between the same parties or between those in privity with them, a prior judgment on the merits upon the same claim or demand by a court which had jurisdiction, is conclusive, whether right or wrong, not only of every matter offered, but of every admissible matter which might have been offered to sustain or defeat the claim or demand.

—Gordon v. Ware Nat. Bank, 132 Fed. 444.....65 C. C. A. 580

After a city had let a contract for the paving of a street, owners of property abutting thereon commenced a suit to enjoin the work and the levying of any special assessment on their property therefor, alleging the invalidity of the contract. No preliminary injunction was issued, and the contractor proceeded to do the work, and the city paid for it, and made an assessment therefor against the plaintiff's property. It was finally determined in the suit by the Supreme Court of the state that the contract was wholly void, as beyond the constitutional powers of the city, and conferred no authority upon it to make the assessment, and in accordance with its mandate the enforcement of such assessment was enjoined by a final decree. *Held*, that the suit was, in effect, one to prevent a cloud being cast upon the title to plaintiffs' property by the anticipated assessment, and that the decree therein was a bar to a subsequent suit by the city to enforce a lien thereon against the property on a quantum meruit under a curative statute giving it such right, where an assessment was invalid because of defects or irregularities in the proceedings, since such right, if it existed, was a complete defense to the prior suit, and should have been pleaded therein.

—Allen v. City of Davenport, 132 Fed. 209; City of Davenport v. Allen, Id. .....65 C. C. A. 641

§ 4. Foreign judgments.

In the courts of other states the judgment of a court of one state is not impeachable except for fraud or want of jurisdiction, is indisputable proof that it rests upon an unanswerable cause of action, is conclusive

Digitized by Google

evidence that the right to its enforcement is wholly unaffected by any laches or lapse of time which preceded its rendition, and gives a right of action for its enforcement, subject to limitation and other laws of the forum which regulate, but do not deny, unreasonably restrict, or oppressively burden, the exercise of that right.
—Lamb v. Powder River Live Stock Co., 132 Fed. 434..... 65 C. C. A. 570

JURISDICTION.

Appellate jurisdiction, see "Appeal and Error," §§ 2, 5.
Of appointment of receivers in bankruptcy, see "Bankruptcy," § 1.
Of equity, see "Equity," § 1.
Of foreign courts to render judgment, see "Judgment," § 1.
Of mandamus proceedings, see "Mandamus," § 1.
Of particular courts, see "Courts."

JURY.

Instructions in civil actions, see "Trial," § 2.
Taking case or question from jury at trial, see "Trial," § 1.
Verdict in civil actions, see "Trial," § 3.

§ 1. Competency of jurors, challenges, and objections.

Rev. St. § 5480, as amended in Act March 2, 1889, c. 393, § 1, 25 Stat. 873 [U. S. Comp. St. 1901, p. 3696], making the use of the mails to defraud a criminal offense, provides that an indictment thereunder may charge offenses to the number of three when committed within the same six calendar months, but the court thereupon shall give a single sentence. Rev. St. § 921 [U. S. Comp. St. 1901, p. 686], provides that a court of the United States, when causes of a like nature or relative to the same question are pending before it, may "make such orders or rules concerning the proceedings therein as may be conformable to the usages of courts for avoiding unnecessary costs or delay, * * * and may consolidate such causes when it appears reasonable to do so." Nine indictments were returned against defendant under said section 5480 [U. S. Comp. St. 1901, p. 3696], each containing three counts, all relating to the same alleged scheme to defraud, but charging different mailings, all within the same six calendar months. The record showed that "by order of the court the said nine indictments were tried together and at the same time, and upon each of the said nine indictments separate verdicts were rendered," and separate sentences were imposed under the several indictments. *Held*, that the indictments were not consolidated, which would, in effect, defeat the implied prohibition against joining more than three offenses in the same indictment, and that the only effect of the order was that all the indictments should be tried together to the same jury, leaving each party with the same material rights as though tried separately.
—Betts v. United States, 132 Fed. 228.....65 C. C. A. 452

That a number of indictments against the same defendant under Rev. St. § 5480 [U. S. Comp. St. 1901, p. 3696], for using the mails to defraud, are by order of the court tried together to the same jury, does not affect the right under Rev. St. § 819 [U. S. Comp. St. 1901, p. 629], to three peremptory challenges for each indictment.
—Betts v. United States, 132 Fed. 228.....65 C. C. A. 452

KNOWLEDGE.

Effect of ignorance of provisions of insurance policy, see "Insurance," § 3.

Digitized by Google

LABELS.

Infringement of trade-mark or trade-name, see "Trade-Marks and Trade-Names," § 1.

LACHES.

Effect on maritime lien, see "Maritime Liens," § 1.

LANDLORD AND TENANT.

Mining leases, see "Mines and Minerals," § 2.

LANDS.

See "Public Lands."

LETTERS PATENT.

For inventions, see "Patents."

LIBEL AND SLANDER.

Liability of telegraph company for transmission of libelous message, see "Telegraphs and Telephones," § 1.

LIENS.

See "Maritime Liens."
For local improvements, see "Municipal Corporations," § 1.
Of carriers, see "Carriers," § 1.

LIFE INSURANCE.

See "Insurance."

LIMITATION.

Of claim of patent, see "Patents," § 2.

LIMITATION OF ACTIONS.

Limitation of action on judgment as deprivation of due process of law, see "Constitutional Law," § 2.

§ 1. Statutes of limitation.

Act Colo. April 29, 1895 (Sess. Laws 1895, p. 239, c. 106), as amended by Act April 6, 1899 (Sess. Laws 1899, p. 248, c. 113), prescribing a general limitation of six years for all actions on judgments rendered without the state, and by provisos declaring that, if the judgment be based on a cause of action which accrued more than six years prior to the commencement of the action on such judgment, the action, if against a bona fide resident of the state, shall be barred unless commenced within three months after the rendition of the judgment sued on, is a law of limitation only in so far as it attempts to interpose a bar because of inaction or laches in enforcing a judgment after it is obtained and a right of action thereon accrues, and is unconstitutional and void, as imposing an unreasonable

Digitized by Google

limitation as applied to an action within the proviso on a judgment of another state based on contract, and rendered prior to the passage of the act upon a cause of action which accrued more than six years before.
—Lamb v. Powder River Live Stock Co., 132 Fed. 434..65 C. C. A. 570

A limitation is unreasonable which does not, before the bar takes effect, afford full opportunity for resort to the courts for the enforcement of the rights upon which the limitation is intended to operate; and this opportunity must be accorded in respect of existing rights of action after they come within the present or prospective operation of the statute and in respect of prospective rights after they accrue.
—Lamb v. Powder River Live Stock Co., 132 Fed. 434..65 C. C. A. 570

Act Colo. April 29, 1895 (Sess. Laws 1895, p. 239, c. 106), as amended by Act April 6, 1899 (Sess. Laws 1899, p. 248, c. 113), relating to limitation of actions on foreign judgments, and being a re-enactment, with certain provisos added, of a prior statute, which it in express terms repealed, was intended to apply to actions on judgments rendered prior as well as subsequent to its passage.
—Lamb v. Powder River Live Stock Co., 132 Fed. 434..65 C. C. A. 570

§ 2. Computation of period of limitation.

Gen. St. Kan. 1889, c. 23, § 32, provides that, after an execution has been issued against a corporation and returned nulla bona, an execution may be issued on an order of court against a stockholder to an extent equal in amount to the amount of his stock, or plaintiff in the execution may proceed by action to charge the stockholder with the amount of his judgment. Section 44 provides that if such corporation be dissolved, leaving debts unpaid, suits may be brought against stockholders at the time of the dissolution, and by another section the corporation is declared dissolved for such purposes when it has suspended business for more than a year. Under the decisions of the state courts, a creditor of a moneyed corporation may proceed by action to enforce the stockholder's liability under section 44 immediately after the expiration of a year from the date of suspension of business without recovering judgment against the corporation, the right being complete on the corporation's dissolution. *Held*, that a creditor was not entitled to delay suit against a stockholder under section 44 while he was maintaining a suit against the corporation under section 32, and obtaining the return of executions unsatisfied, and hence the maintenance of such proceedings did not suspend the statute of limitations against an action against stockholders under section 44.
—Whitman v. Atkinson, 130 Fed. 759.....65 C. C. A. 185

An amendment to a petition, which sets up no new cause of action or claim, and makes no new demand, but simply varies or expands the allegations in support of the cause of action already propounded, relates back to the commencement of the action, and the running of the statute against the claim so pleaded is arrested at that point. But an amendment which introduces a new or different cause of action, and makes a new or different demand, does not relate back to the beginning of the action, so as to stop the running of the statute, but is the equivalent of a fresh suit upon a new cause of action, and the statute continues to run until the amendment is filed; and this rule applies although the two causes of action arise out of the same transaction, and, by the practice of the state, a plaintiff is only required in his pleading to state the facts which constitute his cause of action.
—Patillo v. Allen-West Commission Co., 131 Fed. 680.....
65 C. C. A. 508

A complaint stated facts from which the law raises the legal presumption of a promise to pay the balance of an account stated, and demanded judgment for that amount. An amendment was made to this complaint by adding to it an averment of a promise to pay the balance of the stated account. *Held*, this amendment presented no new cause of action, but simply expanded the allegations in support of the cause of action presented in the original complaint, and the amendment related back to the com-

Digitized by Google

mencement of the action, where the running of the statute of limitations against the cause of action upon the account stated ceased.
—Patillo v. Allen-West Commission Co., 131 Fed. 680..... 65 C. C. A. 508

LIS PENDENS.

Effect on limitation of pendency of other proceedings, see "Limitation of Actions," § 2.

LOCATION.

Of mining claim, see "Mines and Minerals," § 1.

LOST INSTRUMENTS.

Secondary evidence of, see "Evidence," § 1.

MACHINERY.

Liability of employer for defects, see "Master and Servant," § 1.

MANDAMUS.

Appealability of orders in mandamus proceeding, see "Appeal and Error," § 3.

§ 1. **Jurisdiction, proceedings, and relief.**
Act Ky. Feb. 24, 1868 (Laws 1868, p. 622, c. 548), authorizing counties to issue bonds in aid of railroads, requires the county judge to levy taxes to meet the principal and interest of such bonds as they mature, and also requires the sheriff to collect such taxes, and to give a bond therefor, within 30 days after the levy shall have been made, providing that, if he fails to give such bond, he shall be removed from office by the judge, who shall appoint a collector. *Held*, that in a proceeding for a writ of mandamus to compel the levy of a tax to pay a judgment recovered on such bonds the sheriff was properly joined, although no duty would devolve on him until the levy had been made, where it was alleged that he had pledged himself not to give the bond or make the collection; and that, in case he should refuse to give the bond, the writ should require the judge to remove him, and appoint a collector to enforce the collection.
—Guthrie v. Sparks, 131 Fed. 443.....65 C. C. A. 427

MANDATE.

See "Mandamus."
To lower court on decision on appeal or writ of error, see "Appeal and Error," § 10.

MARINE INSURANCE.

See "Insurance," §§ 1, 8.

MARITIME LIENS.

§ 1. **Creation, operation, and effect.**
It seems that under the admiralty law applicable to the enforcement of liens the holder of a maritime lien, who participates in a proceeding in a

Digitized by Google

state court which results in a sale of the vessel at his instance, loses his lien, if not by estoppel, at least by laches.
—Northwestern Commercial Co. v. Bartels, 131 Fed. 28..... 65 C. C. A. 263

Libelant, who was entitled to a lien on a schooner for salvage services and wages as master, filed his claim in receivership proceedings in a state court, and it was allowed. He consented to a sale of the vessel, and urged a corporation to bid, giving its officers to understand that his claim would be settled from the proceeds. He acquiesced in the sale to such corporation, and in the delivery of the vessel thereunder, and after the sale was confirmed asserted the priority of his claim to the proceeds, and only withdrew his claim after another lien, which exhausted the fund, had been given preference. *Held*, that he was estopped by his conduct to enforce his lien against the vessel in admiralty as against the purchaser.
—Northwestern Commercial Co. v. Bartels, 131 Fed. 28..... 65 C. C. A. 263

MARRIAGE.

Between citizen and alien woman, see "Citizens."
Of Indian woman to citizen, see "Indians."

MASTER AND SERVANT.

Presentation in lower court of objections for purpose of review in action for death of servant, see "Appeal and Error," § 4.
Removal to federal court of action for injuries to servant, see "Removal of Causes," § 1.

§ 1. Master's liability for injuries to servant—Tools, machinery, appliances, and places for work.

A railroad company, which adopts the customary and approved means or tests for the discovery of defects in its appliances, discharges its duty to its employés in that regard, and an injury which occurs to an employé notwithstanding must be accepted as resulting from one of the risks of the occupation.
—Illinois Cent. R. Co. v. Coughlin, 132 Fed. 801.....65 C. C. A. 101

Where an automatic car coupler had been permitted to become and remain defective so that the lever would not lift the pin from the socket and the knuckle could not be drawn open by leaning toward the coupler and using one hand, but required the presence of the operator's entire body between the ends of the cars and between the drawbars, and the use of both of his hands, such coupler did not satisfy Act March 2, 1893, c. 196, 27 Stat. 531 [3 U. S. Comp. St. 1901, p. 3174], or Code Iowa 1897, §§ 2097, 2080, requiring the use of automatic car couplers not requiring the presence of any person between the ends of the cars in order to operate the same; and the use of such defective coupler constituted actionable negligence.
—Chicago, M. & St. P. Ry. Co. v. Voelker, 129 Fed. 522..... 65 C. C. A. 226

It is the absolute duty of a master to provide a reasonably safe place in which the servant shall work, having regard to the kind of work and the conditions under which it must necessarily be performed.
—Bunker Hill & Sullivan Mining & Concentrating Co. v. Jones, 130 Fed. 813.....65 C. C. A. 363

The rule as to the duty of a master in respect to providing a safe place to work is not applicable to a case where a servant is injured by reason of defects in or insufficiency of a temporary structure, such as a scaffold-

Digitized by Google

ing or framework for supporting heavy materials, which are appliances or instrumentalities by means of which the work is to be done.

—Phœnix Bridge Co. v. Castleberry, 131 Fed. 175....65 C. C. A. 481

Where a stevedore was injured during the raising of a skid weighing something more than a ton from a lighter, by the breaking of a wire cable known as a "topping lift," and it appeared that such lifts, when in apparent good condition, as was the one in question when selected, were capable of lifting 20 tons, the servant who selected such lift was not guilty of negligence in selecting it, instead of selecting a chain span, which was used for heavier loads.

—The King Gruffydd, 131 Fed. 189.....65 C. C. A. 495

A stevedore was injured by the breaking of a topping lift furnished by the vessel for use in raising a skid from a lighter. Such appliance consisted of a wire cable bent round a concave ring and spliced; the splicing being served with spun yarn, wrapped with bagging and saturated with oil. The appliance in question, instead of being carefully stowed between voyages, had been permitted to remain on deck, exposed to the weather, during several voyages to West India ports, which tended greatly to shorten the period within which it could be safely used. *Held*, that the master of the ship was guilty of negligence in permitting such lift to be used after a mere external inspection, without a periodic examination of the splice, and a renewal of the oiled service intended to protect it.

—The King Gruffydd, 131 Fed. 189.....65 C. C. A. 495

Where a partition made of planks nailed to piles under a railroad trestle was temporarily erected to separate piles of broken stone and sand dumped under the trestle, to be used in making certain concrete foundations, and such partition was put up, taken down, and transferred as the work progressed by the workmen themselves, the master was not liable for injuries to a servant caused by his being struck by three of the planks which fell from the top of the partition by reason of their being insufficiently secured.

—Galow v. Chicago, M. & St. P. Ry. Co., 131 Fed. 242.....
65 C. C. A. 507

Where a telephone lineman was injured by the falling of a defective pole from which he was removing the wires prior to the demolition of the pole, such pole was an appliance only, and not a place to work which plaintiff's employer was required to make safe for him to work on.

—Britton v. Central Union Telephone Co., 131 Fed. 844.....
65 C. C. A. 598

§ 2. Fellow servants.

A mine owner cannot avoid liability for the injury of a miner, arising from his failure to perform the absolute duty he owes to employés to make proper inspection, and to provide a reasonably safe place for the miners to work, by delegating such duty to one who is in another respect a fellow servant of the miner injured.

—Bunker Hill & Sullivan Mining & Concentrating Co. v. Jones, 130 Fed. 813 .....65 C. C. A. 363

When, by the express or implied contract between the master and servant, the former undertakes to furnish the necessary tools or appliances, it is his duty to use ordinary care to see to it that such instrumentalities are safe and suitable; and as this duty, when it exists, is one of the absolute or personal duties, any servant to whom the master delegates it is pro hac vice a vice principal, for whose negligence the master is responsible. But where, by the express or implied contract, the master undertakes merely to furnish the materials needed for the construction of some appliance, which is to be constructed by the workmen themselves, as incident to the main work, the master's duty is performed if he furnishes suitable material and competent workmen, and the negligence of a foreman in charge of the construction by which a workman is injured is that of a fellow servant, for which the master is not liable.

—Phœnix Bridge Co. v. Castleberry, 131 Fed. 175....65 C. C. A. 481

Digitized by Google

A bridge company sent a force of men under a foreman to make repairs on a railroad bridge, consisting in part of replacing certain old parts with heavy steel girders. In doing this, it was necessary to construct on the spot wooden frames or bents to support the weight of the girders while they were being put in place, and they were made by the workmen as an incident to the work. Owing to the defective construction or condition of one of such frames, which had been erected three days before, a girder fell, and killed one of the workmen. *Held* that, in the absence of evidence that the materials furnished by the company were not in all respects suitable and sufficient to make a safe structure, it was not liable for the negligence of the foreman either in the construction of the frame or in failing to inspect it on the day of the accident.
—Phœnix Bridge Co. v. Castleberry, 131 Fed. 175....65 C. C. A. 481

A master who furnished a stiff-leg derrick requiring no guy rope for use by his employés in unloading stone from cars, which was complete and in good repair, and suitable for the work, is not liable for the injury of an employé by the falling of a block forming part of a guy line which had been rigged by fellow servants of such employé for their own convenience to enable the derrick to be given a longer reach than it was intended to have, so that a car might be unloaded without being moved, such line having been put on in the absence of the master, and without his knowledge.
—Maxfield v. Graveson, 131 Fed. 841.....65 C. C. A. 595

The fact that an employé was not present at the time a change was made in an appliance by his fellow servants, without the master's knowledge, by reason of which he was subsequently injured, does not render the master liable for the injury.
—Maxfield v. Graveson, 131 Fed. 841.....65 C. C. A. 595

§ 3. Risks assumed by servant.

Under Act Cong. March 2, 1893, c. 196, § 8, 27 Stat. 532 [3 U. S. Comp. St. 1901, p. 3176], providing that any employé of an interstate carrier who may be injured by any car in use contrary to the provisions requiring the use of automatic couplers shall not be deemed thereby to have assumed the risk, though he continue in the employment of such carrier after the unlawful use of such car, etc., has been brought to his knowledge, a switchman engaged in handling a freight car having a defective coupler, on a track principally used for handling freight trains, though sometimes used to handle cars in need of repairs, did not assume the risk arising from the defect in the coupler; the car not having been marked or isolated as one in bad repair, and its movement at the time not being with a view to its isolation or repair.
—Chicago, M. & St. P. Ry. Co. v. Voelker, 129 Fed. 522.....
65 C. C. A. 226

Where it was the general and uniform custom in a railroad yard to kick cars down to a fieldman without giving him notice or warning, a fieldman who was aware of such custom and remained in that service assumed the risk of injury arising from the observance of the custom.
—Chicago, M. & St. P. Ry. Co. v. Voelker, 129 Fed. 522.....
65 C. C. A. 226

While a person entering voluntarily into a contract of service assumes all the risks and hazards ordinarily incident to the employment, and such as are liable to arise from defects which are patent and obvious to a person of his experience and understanding, he does not ordinarily assume risks arising out of the negligence of the master.
—Bunker Hill & Sullivan Mining & Concentrating Co. v. Jones, 130 Fed. 813 .....65 C. C. A. 363

Where defendant telephone company had not assumed the duty of independently inspecting and testing its telephone poles before they were climbed by linemen, and the only inspection required was such as an ordinarily skillful lineman could readily perform before undertaking to

Digitized by Google

climb the pole, a lineman so employed assumed the risk incident to climbing such poles after making such examination and tests as his judgment would indicate was necessary.

—Britton v. Central Union Telephone Co., 131 Fed. 844..... 65 C. C. A. 598

§ 4. —— **Contributory negligence of servant.**

Where deceased was ordered to accompany an experienced servant into a railroad yard, to receive instructions as to coupling cars, by defendant's superintendent, and who yet did not comply with the instructions of the engineer with whom he was working, that he should not go between the cars, but that he should watch his instructor in the work, and who received the injuries from which he died while between two cars which were being coupled—the engineer being without knowledge of his position at the time—defendant was not liable for his death.

—McMillan v. Grand Trunk Ry. Co., 130 Fed. 827....65 C. C. A. 165

It is not the duty of a miner employed to operate a drill in a mine to inspect the timbering or the condition of the rock above him, but he has the right to assume that the master has performed his duty in making the place where he is directed to work reasonably safe, and to proceed with his work in reliance on such assumption, unless a reasonably prudent and intelligent man, in the performance of his work, would have learned facts from which he would have apprehended danger to himself.

—Bunker Hill & Sullivan Mining & Concentrating Co. v. Jones, 130 Fed. 813 .....65 C. C. A. 363

§ 5. —— **Actions.**

Where the nut on the bolt which fastened one end of a handhold on a car either came off when an employé took hold of the handhold, or had previously worked off, by reason of which the employé fell and was injured, and on the trial of an action to recover for the injury there was uncontradicted testimony of the inspector that the nuts were on and screwed down on the night previous, it was prejudicial error to refuse or to qualify an instruction that the defendant company would not be liable if the handhold pulled loose by reason of the nut coming off, and there was nothing to indicate a weakness or defect in the same, and it would not have been ascertained by ordinary care in inspecting the same.

—Illinois Cent. R. Co. v. Coughlin, 132 Fed. 801.....65 C. C. A. 101

Where plaintiff's intestate, a boy 17 years of age, who had gone into defendant's railroad yard with an experienced servant for the purpose of receiving instructions as to the manner of coupling cars, was killed between two cars, proof that the servant who was with deceased was himself young, coupled with the mere fact that deceased was injured, without evidence as to how the injury occurred, or that there was in fact a failure to instruct, was insufficient to establish defendant's negligence.

—McMillan v. Grand Trunk Ry. Co., 130 Fed. 827....65 C. C. A. 165

A rainstorm of extraordinary severity prevailed at Elma from 6 to 7 in the evening, and washed out the roadbed three-quarters of a mile south of that station. The sectionmen in charge of the section south from Elma and a telegraph operator were there. The heaviest portion of the storm ceased about 7, but lighter rain followed. The plaintiff, an engineer, was running north from Oelwein to Elma. He left Oelwein at 5. There was no storm south of New Hampton 15 miles from Elma. He passed that station at 7:30. Culverts and creeks were full of water, and low grounds were flooded at New Hampton and Alta Vista, a station four miles south of Elma. About 800 feet south of the washout a band of Italian trackmen attempted to warn the plaintiff of his danger, which they had discovered. But he did not observe their signals, or did not understand them. Neither the sectionmen nor the telegraph operator took any steps to patrol the

Digitized by Google

track to discover its condition or to warn the enginemen of their danger before the plaintiff ran into the washout a few minutes past 8 in the evening, although they were at Elma, an hour had passed after the heaviest rain had ceased, and the washout was within a mile of the station.

Held, neither the absence of negligence of the sectionmen and telegraph operator, nor the contributory negligence of the plaintiff, was so clear that it was the duty of the court to give a peremptory instruction for the defendant.

—Chicago Great Western Ry. Co. v. Roddy, 131 Fed. 712..... 65 C. C. A. 470

Plaintiff, a negro laborer, was employed by an independent contractor to tear down a wall in defendant's locomotive works during the making of the alterations therein, for which purpose plaintiff climbed on the third round of a ladder, with the width of the wall of the erecting shop of the defendant's works between him and the rail on which a movable crane was operated. Plaintiff reached across the wall and took hold of the rail, and in this position began throwing bricks from the wall, and while so engaged the crane was moved along the rail, crushing plaintiff's hand. At the time defendant's crane operator started the same, when it was about 50 feet distant from the plaintiff's hand, he looked along the track, and saw nothing to cause him to suspect danger to plaintiff, and there was nothing in plaintiff's position to cause the operator to believe that plaintiff's hand, which was dark, was on the rail. *Held*, that such facts did not justify the submission of the case to the jury on the theory that defendant, after plaintiff had put himself in a position of danger, could, by exercise of reasonable care, have discovered the danger, and avoided the injury.

—Richmond Locomotive Works v. Ramsey, 131 Fed. 197..... 65 C. C. A. 503

Where a telephone lineman had been previously discharged by defendant for incapacity, and thereafter, on again applying for employment, defendant was informed that he had not sufficient experience to work as a lineman, by reason of which he was employed at other work for a time, and was then directed to do a lineman's work in removing wires from certain old poles, in which work he was injured by the falling of a pole, whether defendant was negligent in permitting him to do such work, which involved the climbing of the poles, without warning him to make an inspection thereof, and as to the manner in which such inspection should be made, was for the jury.

—Britton v. Central Union Telephone Co., 131 Fed. 844..... 65 C. C. A. 598

Where the foreman of a switch crew was injured by the derailing of a car, whether the railroad company was negligent *held*, under the evidence, a question for the jury.

—Chicago, M. & St. P. Ry. Co. v. Benton, 132 Fed. 460..... 65 C. C. A. 660

Whether a foreman of a switch crew, injured by the derailing of a car, assumed the risk, *held*, under the evidence, a question for the jury.

—Chicago, M. & St. P. Ry. Co. v. Benton, 132 Fed. 460..... 65 C. C. A. 660

Whether a foreman of a switch crew, injured by the derailing of a car, was guilty of negligence, *held*, under the evidence, a question for the jury.

—Chicago, M. & St. P. Ry. Co. v. Benton, 132 Fed. 460..... 65 C. C. A. 660

MEASURE OF DAMAGES.

See "Damages," § 2.
For breach of contract, see "Sales," § 2.

Digitized by Google

MINES AND MINERALS.

Mine operators as employers, see "Master and Servant," §§ 2, 4.
Performance of contract of sale, of mining property, see "Vendor and Purchaser," § 1.
Reservation of mineral lands for Indians, see "Indians."

§ 1. Public mineral lands.

Where complainant made certain mining locations on an Indian reservation on May 27, 1902, on which day an act of Congress subjecting mineral lands in the reservation to mineral entry was passed (Act May 27, 1902, c. 888, 32 Stat. 245), but on the same day two joint resolutions (32 Stat. pt. 1, 742, 744) were passed postponing the operation of the act until December 31, 1902, such joint resolutions suspended complainant's right to locate mineral claims on the land under such act.

—Gibson v. Anderson, 131 Fed. 39.....65 C. C. A. 277

§ 2. Title, conveyances, and contracts.

A landowner, in consideration of one dollar, "as well as the agreements hereinafter mentioned," bargained, sold, and conveyed to plaintiff's assignor, his heirs and assigns, all the mineral, coal, iron ore, ore and potter's clay, and other minerals, etc., and all timber suitable for lumber on a certain farm described. The agreement required the grantee "to enter upon the land and make search for coal and other minerals," and, if they were found in such quantities as to justify him to work the same, then he was to pay $10 per annum after the completion of a certain railroad, and on request, until mining was commenced or during the continuance of the agreement, "to apply on the payment of rent of coal, iron ore, or other minerals, or oil first mined thereafter." There was no provision as to how long the agreement should continue, nor any stipulation as to when the grantee should commence to mine, or how long he should continue. *Held*, that such agreement did not constitute a conveyance of the minerals, timber, etc., to the grantee in fee, but constituted a mining lease, requiring the grantee to search for ores, etc., within a reasonable time.

—Tennessee Oil, Gas & Mineral Co. v. Brown, 131 Fed. 696.....
65 C. C. A. 524

Where a mining lease provided that the grantee might terminate the same at his election, the lease was terminable at the will of either party.

—Tennessee Oil, Gas & Mineral Co. v. Brown, 131 Fed. 696.....
65 C. C. A. 524

Where a mining lease required the grantee to search for minerals within a reasonable time as a condition precedent to his right to take minerals from the land under the lease, his failure to make any search or examination, except a mere superficial one, of which the grantor had no notice, for a period of 15 years, entitled the lessor to treat the lease as abandoned.

—Tennessee Oil, Gas & Mineral Co. v. Brown, 131 Fed. 696.....
65 C. C. A. 524

Where a mining lease required the grantee to make a search for minerals on the land within a reasonable time as a condition precedent to the right to take minerals discovered on the terms of payment specified, the duty of exploration included a search for all of the minerals named in the lease which might reasonably be expected to be found in the land, considering known geological conditions, to such an extent as would not only determine the presence or absence of minerals, but their commercial value, considering their abundance and accessibility.

—Tennessee Oil, Gas & Mineral Co. v. Brown, 131 Fed. 696.....
65 C. C. A. 524

MISREPRESENTATION.

See "Fraud."

Digitized by Google

MONOPOLIES.

Contracts in restraint of trade, see "Contracts," § 1.

§ 1. **Trusts and other combinations in restraint of trade.**

It is no objection to the enforcement of a contract, in the consideration and enforcement of which nothing illegal inheres, that it may incidentally aid one of the parties in evading or violating the anti-trust statute.
—Ingraham v. National Salt Co., 130 Fed. 676.....65 C. C. A. 54

Where a corporation engaged in the business of buying and selling fish sold out its assets and good will to plaintiff's assignor, and the seller no longer retained any interest in the property, so that the sale was not a mere combination of owners and properties under one management, the sale was not in violation of the federal anti-trust act of July 2, 1890, c. 647, 26 Stat. 209 [U. S. Comp. St. 1901, p. 3200], prohibiting contracts in restraint of trade, though the contract might incidentally or in some remote degree injuriously affect interstate commerce.
—Davis v. A. Booth & Co., 131 Fed. 31.....65 C. C. A. 269

In determining whether or not a combination is in violation of the federal anti-trust law, as in restraint of interstate commerce, it is immaterial that such is not its ultimate object, which is in most cases to increase the trade and profits of the parties to such combination; nor is it material to ascertain what proportion the resulting restraint of interstate commerce bears to other results. The true inquiry is whether it tends directly to appreciably restrain interstate trade, and, if it does, it is within the statute, although such effect may not be so considerable as its other effects.
—Ellis v. Inman, Poulsen & Co., 131 Fed. 182.....65 C. C. A. 488

A complaint alleged that plaintiff was a builder doing business in Portland, Or.; that in such business he purchased large quantities of rough lumber from mills located at Vancouver, Wash., which was seven miles from Portland, but that such mills did not manufacture finished or kiln-dried lumber; that defendants, who comprised all the manufacturers and dealers in Portland, combined to fix exorbitant prices on all lumber sold by them, and to compel all consumers in Portland to pay such prices by refusing to sell any finished lumber at any price to such consumers as bought lumber of any kind from other dealers, except on condition that such consumer pays to defendants the difference between the price he paid for lumber so bought from others and the price charged therefor by defendants and promises to buy all his lumber thereafter from defendants; that the purpose and effect of such combination was to prevent plaintiff and other consumers from buying lumber at Washington mills, and to obtain a monopoly of the trade in Portland at unreasonable and exorbitant prices. *Held*, that the combination charged constituted a violation of the federal anti-trust act, its effect being to directly restrain interstate commerce, and that the complaint stated a cause of action thereunder for the recovery of damages alleged to have resulted to plaintiff.
—Ellis v. Inman, Poulsen & Co., 131 Fed. 182.....65 C. C. A. 488

MORTGAGES.

Act of bankruptcy, see "Bankruptcy," § 1.
Appealability of orders in foreclosure suit, see "Appeal and Error," § 3.
Corporation mortgages, see "Corporations," § 4.
Persons concluded by decree in foreclosure proceedings, see "Judgment," § 3.
Railroad mortgages, see "Railroads," § 1.

§ 1. **Construction and operation.**

One of several holders of bonds secured by a common mortgage, who purchases superior liens upon or titles to the mortgaged property, takes

Digitized by Google

them in trust for his co-bondholders upon condition that within a reasonable time after they receive notice of his purchases they contribute to him their proportionate shares of the amounts he paid for them. A community of interest in a common title or security involves a mutual obligation not to impair it.

—Booker v. Crocker, 132 Fed. 7.....65 C. C. A. 627

The proportionate share of each bondholder in the liens purchased and in the expenses thereof is measured by the par value of the bonds which he holds, and not by the amount he paid for them.

—Booker v. Crocker, 132 Fed. 7.....65 C. C. A. 627

Where the liens or titles purchased to protect the common security also cover other property not subject to the common mortgage, a bondholder who contributes his share of the expenses of their purchase acquires a like share in the liens or titles upon property thus purchased which is not subject to the mortgage.

—Booker v. Crocker, 132 Fed. 7.....65 C. C. A. 627

MOTIONS.

Pending appeal in bankruptcy, see "Bankruptcy," § 4.

MULTIFARIOUSNESS.

In equity pleading, see "Equity," § 2.
In pleading ground for reversal on appeal, see "Appeal and Error," § 10.

MUNICIPAL CORPORATIONS.

See "Counties."
Assignment of claim against city, see "Assignments," § 1.
Conclusiveness of adjudication in action against city, see "Judgment," § 3.
Jurisdiction of federal courts of suit to restrain enforcement of ordinance, see "Courts," § 1.
Water supply, see "Waters and Water Courses," § 1.

§ 1. Public improvements.

Under Acts 25th Gen. Assem. Iowa, c. 7, p. 18, which applies to cities under special charter, and provides that all street improvements shall be made by contract, let to the lowest bidder, after advertising and secured by a bond from the contractor, a valid contract is a jurisdictional prerequisite to the exercise by the city of the power conferred to make a special assessment on abutting property of the cost of paving a street.

—Allen v. City of Davenport, 132 Fed. 209; City of Davenport v. Allen, Id. .....65 C. C. A. 641

Code Iowa 1873, §§ 478, 479, provide for suits by municipal corporations to enforce a lien upon abutting property for the cost of street improvements, and that "in any such proceeding, where the court trying the same shall be satisfied that the work has been done or materials furnished, which, according to the true intent of the act, would be properly chargeable upon the lot or land through or by which the street * * * may pass, a recovery shall be permitted, or a charge enforced, to the extent of the proper proportion of the value of the work or materials which would be chargeable on such lot or land, notwithstanding any informality, irregularity, or defect in any such municipal corporation or its officers." *Held*, that the purpose of such provision was to prevent property owners from taking advantage of technical defenses, when the evidence shows that the municipality has exercised its power in substantial conformity with law, but that it did not authorize recovery by a city for the cost of paving done under a contract which was wholly void, as beyond its con-

Digitized by Google

stitutional power, and which, as had been adjudged by the Supreme Court of the state, created no obligation on its part, and conferred no authority upon it to make a special assessment against abutting property for the cost of the work done thereunder.
—Allen v. City of Davenport, 132 Fed. 209; City of Davenport v. Allen, Id. .....65 C. C. A. 641

NAMES.

See "Trade-Marks and Trade-Names."

NATIONAL BANKS.

See "Banks and Banking," § 3.

NEGLIGENCE.

Causing collision, see "Collision," §§ 1, 2, 4.

By particular classes of parties.

See "Carriers," §§ 1, 2.
Employers, see "Master and Servant," §§ 1-5.
Railroad companies, see "Railroads," § 2.
Telegraph or telephone companies, see "Telegraphs and Telephones," § 1.

Condition or use of particular species of property, works, or machinery.

See "Railroads," § 2.
Tugs, see "Towage."

Contributory negligence.

Of servant, see "Master and Servant," §§ 4, 5.

§ 1. **Acts or omissions constituting negligence.**
Maintenance of an unguarded canal, having precipitous banks, through a thickly settled portion of a town, to conduct water to defendant's mills, was not, on the allegations of the declaration in this case, such negligence as to sustain a recovery for the death of a child five years of age, who fell into the canal and was drowned.
—McCabe v. American Woolen Co., 132 Fed. 1006....65 C. C. A. 59

§ 2. **Actions.**
Where a right of recovery was rested upon each of two separate and concurring acts of negligence, it was the right of each party to have the jury correctly instructed respecting each act of negligence, the same as if the right of recovery rested upon it alone; and, if there was material error in the instructions given or refused respecting either charge of negligence, the verdict, where general, cannot stand.
—Chicago, M. & St. P. Ry. Co. v. Voelker, 129 Fed. 522.....
65 C. C. A. 226

NEW TRIAL.

Remand by appellate court for new trial, see "Appeal and Error," § 10.

NOMINAL DAMAGES.

For trespass, see "Trespass," § 1.
Right to recover as ground for reversal on appeal, see "Appeal and Error," § 10.

Digitized by Google

NONSUIT.

Before trial, see "Dismissal and Nonsuit."

NOTARIES.

Stamp tax on notary's certificate of acknowledgment, see "Internal Revenue."
Taking and certificate of acknowledgment, see "Acknowledgment," § 1.

NOTICE.

Of assignment, see "Assignments," § 1.
Of contract of transportation of express messenger, see "Carriers," § 2.
To corporate officers, see "Corporations," § 4.

OBLIGATION OF CONTRACT.

Laws impairing, see "Constitutional Law," § 1.

OFFICERS.

Who may take acknowledgments, see "Acknowledgment," § 1.

Particular classes of officers.

See "Judges"; "Sheriffs and Constables."
Bank officers, see "Banks and Banking."
Corporate officers, see "Corporations," §§ 3–5.

OPINION EVIDENCE.

In civil actions, see "Evidence," § 4.

ORDERS.

Parol evidence of orders of court, see "Evidence," § 3.
Review of appealable orders, see "Appeal and Error."

PAROL EVIDENCE.

In civil actions, see "Evidence," § 3.

PARTIES.

Death ground for abatement, see "Abatement and Revival," § 1.
Persons concluded by judgment, see "Judgment," § 3.

In particular actions or proceedings.

See "Equity," § 2; "Mandamus," § 1.
To set aside fraudulent conveyances, see "Fraudulent Conveyances," § 1.

Digitized by Google

PARTNERSHIP.

Assignment, administration, and distribution of estate of bankrupt partnership, see "Partnership," § 2.

§ 1. The relation.

Two men for a number of years conducted a business under a partnership agreement, by which each agreed to bring into the business as rapidly as practicable all money he should be able to control, and not to withdraw, without the consent of the other, more than necessary to support his family. It was also provided that each was to have a certain interest in the business, and, to equalize the capital, interest should be allowed annually. All the capital was contributed by one, and, the business having been conducted during the later years at a loss, the other by agreement drew out a fixed sum per month for living expenses. *Held*, that such arrangement constituted a partnership.

—Buckingham v. First Nat. Bank, 131 Fed. 192.....65 C. C. A. 498

PASSENGERS.

See "Carriers," § 2.

PATENTS.

Of public lands, see "Public Lands," § 1.
Validity of contract for manufacture of machinery infringing, see "Contracts," § 1.

§ 1. Patentability.

In determining the question of identity of the inventive idea involved in two patents, it is not a sufficient answer to say of an alleged anticipation that it was a mere paper patent, and that the device had never been operative or commercially successful, because prior existing conditions may not have stimulated full development.

—Ideal Stopper Co. v. Crown Cork & Seal Co., 131 Fed. 244..... 65 C. C. A. 436

A patentee cannot be denied invention because of a prior patent for a device which never came into use, unless the idea upon which his patent is predicated is so clearly set forth or suggested in the alleged anticipating patent that a mechanic with such patent before him could by the exercise of mere mechanical skill so modify proportions or change the mode of operation as to overcome the difficulties which excluded the prior device from commercial utility.

—Ideal Stopper Co. v. Crown Cork & Seal Co., 131 Fed. 244..... 65 C. C. A. 436

§ 2. Construction and operation of letters patent.

The Adams patent, No. 24,915, for "a tube or cylinder cast out of copper and free from blowholes and other similar defects, when produced as herein stated," covered a product only, and not the process, and was void for anticipation, it being shown that other processes previously in use also produced sound copper tubes, although not so large a percentage as that described in the patent.

—American Tube Works v. Bridgewater Iron Co., 132 Fed. 16..... 65 C. C. A. 636

§ 3. Infringement.

In a claim of a patent for a combination, all the elements which the patentee has specified must be regarded as material, and infringement cannot be found in a device in which one of such elements is omitted, unless an equivalent part is employed.

—Levy v. Harris, 130 Fed. 711.....65 C. C. A. 113

Digitized by Google

Complainant's bill alleged infringement of certain patents for improvements in machines designed for use in the post offices of the United States in canceling stamps and postmarking mail matter; that one of the defendants, who was a postmaster, was using in his office two infringing machines under leases from his codefendants; that such leases would expire in the near future, and that defendants were preparing to renew the same. It was also alleged that complainant had tendered to defendant postmaster, for use in his office on the same terms, two machines made under the patent, which had been refused. The bill prayed for the usual relief for infringement, and for an injunction against the renewal by defendants of the lease. The postmaster, who was the only defendant residing within the district, alone appeared, and filed a plea, alleging that he never personally used or caused to be used the alleged infringing machines, but that they were contracted for and placed in his office by the post office department, where they were used by his subordinates by order of such department, solely in the service and for the benefit of the United States; that the rental for such machines was paid by order of the department from government funds; and that he had no control over the leasing of the same, or the renewal of the leases therefor. *Held* that, while the court was of opinion, on principle, that it had jurisdiction, and that complainant was entitled to the remedy invoked, the question of jurisdiction was so far in doubt, in view of the decision of the supreme court in Belknap v. Schild, 16 Sup. Ct. 443, 161 U. S. 10, 40 Fed. 599, that the plea should be sustained.

—International Postal Supply Co. v. Bruce, 132 Fed. 1006..... 65 C. C. A. 130

A suit which raises a question of infringement is one arising under the patent law, and the fact that the patentee may also have a remedy by action for breach of contract does not defeat the jurisdiction.

—Rupp & Wittgenfeld Co. v. Elliott, 131 Fed. 730....65 C. C. A. 544

It is within the right of the owner of patents for machines used by retail dealers to fasten buttons on shoes for customers to furnish such machines to users, without charge, under a license which permits their use only with wire purchased from such owner; and one who, with knowledge of such restriction, manufactures and sells to such users wire put up on spools in the exact form required for use on such machines, and which is suitable for no other use, with the intention that it shall be used on such machines, is liable as a contributory infringer.

—Rupp & Wittgenfeld Co. v. Elliott, 131 Fed. 730....65 C. C. A. 544

The statement, in a printed copy of a patent issued and sold by the Patent Office, of the date when the application was filed, will be taken as prima facie evidence of such date, in the absence of objection, and the date of invention will be presumed to have been the same.

—Drewson v. Hartje Paper Mfg. Co., 131 Fed. 734....65 C. C. A 548

Where a patentee, who had contracted to obtain an extension of his patent, if possible, and to assign the same to plaintiff, made a compromise agreement with defendant, which was opposing the extension, by which the opposition was withdrawn, and defendant was to have a license to use the patented device, plaintiff, with knowledge of the agreement made for its benefit, was bound thereby, and in any event was barred by laches from maintaining a suit in equity for infringement against defendant commenced within less than a month before the extended patent expired, and more than three years after it had full knowledge of all the facts, during which time it made no claim of infringement.

—American Tube Works v. Bridgewater Iron Co., 132 Fed. 16..... 65 C. C. A. 636

Digitized by Google

PATENTS ENUMERATED.

ENGLISH.

1848.

12,247. Bottle stopper ..436, 439, 440

UNITED STATES.

DESIGN.

25,795. Garment fastener 194

ORIGINAL.

13,011. Stocking supporter 199
24,915. Cast copper tubes..... 636
61,381. Device to regulate speed of water wheels 640
70,485. Device for treating vegetable substances for making paper pulp..... 551
99,347. Napkin supporter 199
104,323. Ore roasting furnace..... 307
167,993. Hatchway 197
208,387. Stocking supporter 199
226,553. Device to regulate speed of steam engine 640
228,284. Safety-brake for elevator.. 640
263,797. Device for manufacture of tannic acid 551
347,778. Safety-brake for elevator.. 640
399,995. Ore roasting furnace..... 307
408,700. Button fastening machine.. 544
412,155. Electric railway trolleys.. 316, 317
421,086. Stocking supporter 200
459,799. Ore roasting furnace..... 307
480,093. Shell for wheel hubs..... 466
495,883. Ore roasting furnace..... 306, 307, 311
508,542. Ore roasting furnace..... 306, 307, 311
521,461. Telephone switch board... 313
526,012. Button fastening machine.. 544
540,072. Bottle stopper 436
545,550. Apparatus for separating gases from liquids..... 552
552,869. Button fastening machine.. 544
565,263. Apparatus for separating gases from liquids..... 548
599,447. Bowling apparatus ...447, 448
617,691. Telephone switch board... 313
617,692. Telephone switch board... 313
638,540. Abdominal pad and stocking supporter 199
648,309. Elevator guard ..196, 197, 198
652,407. Garment fastener 194
664,564. Quill-grinding machine ... 113
679,896. Sound box for talking machine 305
690,639. Electric railway trolleys... 319

REISSUE.

11,685. Bottle stopper 436

PAYMENT.

Condition precedent to action for specific performance, see "Specific Performance," § 1.
Of insurance, see "Insurance," § 8.
Of price of land sold, see "Vendor and Purchaser," § 1.

PENDENCY OF ACTION.

Effect on limitation of other action, see "Limitation of Actions," § 2.

PERSONAL INJURIES.

See "Negligence."
To employé, see "Master and Servant," §§ 1–5.
To passenger, see "Carriers," § 2.
To traveler on highway crossing railroad, see "Railroads," § 2

PETITION.

In bankruptcy, see "Bankruptcy," § 1.

PHOTOGRAPHS.

Of application for life insurance, see "Insurance," § 3.

Digitized by Google

PHYSICIANS AND SURGEONS.

Medical treatment of injured seamen, see "Seamen."

PLEADING.

Adoption by federal courts of practice of state courts, see "Courts," § 1.
Amendment after expiration of period of limitation, see "Limitation of Actions," § 2.
Defects ground for reversal on appeal, see "Appeal and Error," § 10.

Allegations as to particular facts, acts, or transactions.

Diverse citizenship as ground for removal of causes, see "Removal of Causes," § 1.

In actions by or against particular classes of parties.

See "Judges," § 1.
Directors of national bank, see "Banks and Banking," § 3.

In particular actions or proceedings.

See "Equity," § 2; "Negligence," § 1.
For personal injuries, see "Railroads," § 2.
On insurance policy, see "Insurance," § 9.
On subscription to corporate stock, see "Corporations," § 2.

PLEDGES.

Validity of pledge of insurance policy, see "Insurance," § 2.

POLICY.

Of insurance, see "Insurance."

POST OFFICE.

Measure of damages for breach of contract to furnish supplies to Post Office Department, see "Damages," § 2.

§ 1. **Offenses against postal laws.**
Issues, evidence, and instructions considered in a prosecution based on Rev. St. § 5480, as amended by Act March 2, 1889, c. 393, § 1, 25 Stat. 873 [U. S. Comp. St. 1901, p. 3696], for fraudulent use of the mails.
—Betts v. United States, 132 Fed. 228.....65 C. C. A. 452

POWERS.

Of attorney, see "Principal and Agent."

PRACTICE.

Adoption by United States courts of practice of state courts, see "Courts," § 1.

In particular civil actions or proceedings.

See "Mandamus," § 1.

Digitized by Google

Particular proceedings in actions.

See "Abatement and Revival"; "Costs"; "Damages," § 3; "Dismissal and Nonsuit"; "Evidence"; "Judgment"; "Jury"; "Limitation of Actions"; "Removal of Causes"; "Trial."

Verdict, see "Trial," § 3.

Particular remedies in or incident to actions.

See "Injunction."

Procedure in criminal prosecutions.

See "Criminal Law."

Procedure in exercise of special jurisdictions.

In admiralty, see "Admiralty"; "Collision," § 5.
In bankruptcy, see "Bankruptcy," § 1.
In equity, see "Equity."
Particular courts, see "Courts."

Procedure on review.

See "Appeal and Error."

PREJUDICE.

Ground for reversal in civil actions, see "Appeal and Error," § 9.

PRESUMPTIONS.

On appeal or error, see "Appeal and Error," § 9.

PRINCIPAL AND AGENT.

Admissions by agent, see "Evidence," § 2.
Insurance agents, see "Insurance," § 1.
Liability in tort of agent for party obtaining erroneous judgment in admiralty, see "Admiralty," § 2.

§ 1. Rights and liabilities as to third persons.

A written power of attorney, by which defendant appointed another his attorney in fact to conduct "to final consummation" a pending suit in which defendant was complainant, or to compromise the same, as to him should seem expedient, did not confer authority upon the attorney in fact to stipulate through counsel employed by him, and without defendant's knowledge or consent, for the submission of the matter in controversy to a special tribunal consisting of referees selected by him and the adverse parties, and defendant was not bound by such a stipulation, nor liable for the expense of the hearing thereunder.

—City of New York and City of Brooklyn v. Dubois, 132 Fed. 752.. 65 C. C. A. 590

PROCESS.

See "Mandamus."
On appeal or writ of error, see "Appeal and Error," § 8.

PROPERTY.

See "Mines and Minerals"; "Shipping"; "Trade-Marks and Trade-Names."
Constitutional guaranties of rights of property, see "Constitutional Law," § 2.
Intermixture, see "Confusion of Goods."
Taking for public use, see "Eminent Domain."

Digitized by Google

PUBLIC DEBT.

See "Counties," § 1.

PUBLIC IMPROVEMENTS.

By municipalities, see "Municipal Corporations," § 1.

PUBLIC LANDS.

Mineral lands, see "Mines and Minerals," § 1.
Reservation of portion of public lands for Indians, see "Indians."

§ 1. Disposal of lands of the states.

Rev. St. Ky. c. 102, § 3, provides that any person who wishes to appropriate any vacant and unappropriated lands, on application to the county court of the county in which the same lies, paying at such price as the court may allow, not less than $5 per 100 acres therefor, may obtain an order of court authorizing him to enter and survey any number of acres of such land in the county, not less than 25 nor more than 200. *Held*, following the decisions of the Kentucky Court of Appeals, that such act did not preclude the survey of several tracts of 200 acres each by the same person, and that a patent for lands so surveyed was not void on its face because it conveyed more than 200 acres.
—Lockard v. Asher Lumber Co., 131 Fed. 689.....65 C. C. A. 517

PUBLIC POLICY.

Validity of contract, see "Contracts," § 1.
Validity of insurance policy, see "Insurance," § 2.

PUBLIC USE.

Taking property for public use, see "Eminent Domain."

PUBLIC WATER SUPPLY.

See "Waters and Water Courses," § 1.

PUNCTUATION.

Affecting construction of statutes, see "Statutes," § 1.

PUNITIVE DAMAGES.

For transmission of libelous message, see "Telegraphs and Telephones," § 1.

QUESTIONS FOR JURY.

In civil actions, see "Trial," § 1.

Digitized by Google

RAILROADS.

As employers, see "Master and Servant."
Carriage of goods and passengers, see "Carriers."
Interstate commerce, see "Commerce," § 1.
Mandamus to compel levy of tax to pay judgment on bonds issued in aid of railroads, see "Mandamus," § 1.
Presentation in lower court of objections for purpose of review in actions against, see "Appeal and Error," § 4.

§ 1. Indebtedness, securities, liens, and mortgages.

One who purchased second mortgage bonds of a railroad company, for a merely nominal price, 18 years after a first mortgage had been foreclosed and the property sold in proceedings which were public, and without fraud, and who made no inquiries, although the unpaid interest coupons were attached to many of the bonds, and all the facts could have been readily ascertained, has no standing in equity as an innocent purchaser to impeach the validity of the foreclosure sale on the ground of technical irregularities as against a new company which had purchased the property, improved it at large expense, and had included it in a mortgage securing bonds of its own issue.

—Raphael v. Rio Grande Western Ry. Co., 132 Fed. 12..... 65 C. C. A. 632

§ 2. Operation.

Act March 2, 1893, c. 196, 27 Stat. 531 [3 U. S. Comp. St. 1901, p. 3174], provides that after January 1, 1898, it shall be unlawful for any common carrier, engaged in interstate commerce by railroad, to haul or permit to be hauled or used on its line any car used in moving interstate traffic not equipped with couplers "coupling automatically by impact, and which can be uncoupled without the necessity of men going between the ends of the cars." Code Iowa 1897, §§ 2097, 2080, declares that after the same date no corporation operating a railroad shall have upon such railroad in that state any car that is not equipped with "automatic couplers so constructed as to enable any person to couple or uncouple them without going between them." *Held*, that the test to be applied by both of said acts, viz., whether the person operating the coupler is required to go between the ends of the cars, applies to the act of coupling as well as that of uncoupling, and that the act of Congress forbids the use of a coupler which requires the operator to go between the ends of the cars to prepare the coupler for the impact.

—Chicago, M. & St. P. Ry. Co. v. Voelker, 129 Fed. 522..... 65 C. C. A. 226

The preparation of the coupler for the impact is not distinct from the act of coupling. The preparation and the impact are connected and indispensable parts of the larger act, which is regulated by the statute, and the performance of which is intended to be relieved from unnecessary risk and danger.

—Chicago, M. & St. P. Ry. Co. v. Voelker, 129 Fed. 522..... 65 C. C. A. 226

Where an automatic car coupler had been permitted to become and remain defective, so that the lever would not lift the pin from the socket, and the knuckle could not be drawn open by leaning toward the coupler and using one hand, but required the presence of the operator's entire body between the drawbars, and the use of both of his hands, such coupler did not satisfy Act March 2, 1893, c. 196, 27 Stat. 531 [3 U. S. Comp. St. 1901, p. 3174], or Code Iowa, 1897, §§ 2080, 2097, requiring the use of automatic car couplers not requiring the presence of any person between the ends of the cars in order to operate the same.

—Chicago, M. & St. P. Ry. Co. v. Voelker, 129 Fed. 522..... 65 C. C. A. 226

Digitized by Google

Defendant, as receiver, operated a narrow gauge railroad wholly in Ohio, which connected at one of its termini with the B. & O. Railroad. Defendant refused to ship interstate traffic over his road, either received from or delivered to the B. & O. road, under a through bill of lading, or any other arrangement, except that, on the delivery of such freight shipped over defendant's road under a local bill of lading at its terminus, it should be received for transportation without the state by the B. & O. road under another bill of lading, the latter road assuming defendant's local freight charge, and defendant, on receiving such shipments from the B. & O. for transportation to points on his line, charged a local freight tariff from the receiving point to destination, also assuming payment of the B. & O.'s advance charges, settlement of freight between the parties being made weekly. *Held*, that defendant's railroad was not engaged in interstate commerce within the meaning of, and was, therefore, not liable for penalties for noncompliance with, the safety appliance act (Act Cong. March 2, 1893, c. 196, 27 Stat. 532, as amended by Act Cong. April 1, 1896, c. 87, 29 Stat. 85 [U. S. Comp. St. 1901, p. 3175]), requiring common carriers engaged in interstate commerce by railroad to equip their cars with automatic couplers, etc.

—United States v. Geddes, 131 Fed. 452.....65 C. C. A. 320

Shannon's Code, §§ 1574–1576, requires every railroad company to keep some person on its locomotive always on the lookout ahead, and, when any person, animal, or other obstruction appears on the road, to sound the alarm whistle, put down brakes, and exercise every possible means to stop the train and prevent an accident, and renders a railroad company absolutely liable for an accident caused by a failure to comply therewith. *Held*, that such sections did not render the railroad company absolutely liable for a collision occurring in the daytime, while the engine was being operated backwards with the tender in front, and that the refusal of the court to charge that if the engineer was actually on the lookout ahead of his engine, and saw plaintiff's vehicle as soon as it could have been seen, as it approached and entered on the crossing, and the engineer immediately blew the alarm whistle, put down the brakes, and used every possible means to stop the train and prevent the accident, plaintiff could not recover, though the engine was being operated backwards, was error.

—Southern Ry. Co. v. Simpson, 131 Fed. 705.....65 C. C. A. 563

In an action against a railroad company for injuries at a crossing, under Shannon's Code, §§ 1574–1576, requiring every railroad company to keep some person on its locomotive on the lookout ahead, and certain other precautions, and rendering such company absolutely liable for injuries occasioned by a failure to comply with such sections, contributory negligence is no defense.

—Southern Ry. Co. v. Simpson, 131 Fed. 705.....65 C. C. A. 563

Where a declaration in an action for injuries at a railroad crossing alleged that defendant wrongfully and negligently ran its engine and cars against plaintiff, when crossing its track in a lawful and prudent manner, it stated a cause of action at common law and under Shannon's Code, §§ 1574–1576, requiring every railroad company to maintain a lookout ahead on the locomotive, etc., and rendering the company absolutely liable for damages occasioned by failure to comply with the act, though such act was not referred to in the declaration; and hence the amendment thereof, by adding a count specially declaring liability under the statute, did not constitute a departure.

—Southern Ry. Co. v. Simpson, 131 Fed. 705.....65 C. C. A. 563

Where a railroad company was not required by Shannon's Code, § 1574, to blow the whistle or ring the bell at a crossing at which plaintiff was injured, evidence tending to show a custom of the company, subsequent to the collision, to blow the whistle at such crossing, was inadmissible.

—Southern Ry. Co. v. Simpson, 131 Fed. 705.....65 C. C. A. 563

Digitized by Google

REAL ACTIONS.

See "Forcible Entry and Detainer," § 1.

RECEIVERS.

Appealability of order discharging receiver, see "Appeal and Error," § 3.
Appointment of receivers in bankruptcy proceedings, see "Bankruptcy," § 1.
Of corporations, see "Corporations," § 5.
Of insolvent national banks, see "Banks and Banking," § 3.

RECORDS.

Admissibility in evidence of record of proceedings constituting act of bankruptcy, see "Bankruptcy," § 1.
Transcript on appeal or writ of error, see "Appeal and Error," § 6.

REHEARING.

In bankruptcy proceedings, see "Bankruptcy," § 4.

REMEDY AT LAW.

Effect on jurisdiction of equity of suit for infringement of patent, see "Patents," § 3.

REMOVAL OF CAUSES.

§ 1. Citizenship or alienage of parties.

The question whether there is a separable controversy in a suit, which will authorize its removal, must be determined by the state of the pleadings and the record at the time of filing the petition for removal.
—Laden v. Meck, 130 Fed. 877.....65 C. C. A. 361

An allegation in a petition for removal, merely, that certain of the petitioners are "residents" of a state other than that of which plaintiff is a citizen, and that none of the petitioners are "residents and citizens" of the state whereof the plaintiff is a citizen, is insufficient to give the federal court jurisdiction.
—Laden v. Meck, 130 Fed. 877.....65 C. C. A. 361

To authorize a removal by one or more of the defendants on the ground that there is a separable controversy which is "wholly between citizens of different states," it must appear from the petition that each party to the controversy is a citizen of some state.
—Laden v. Meck, 130 Fed. 877.....65 C. C. A. 361

Where a petition in a state court in an action for injuries to a servant against the master and a servant alleged concurring acts of negligence of the master and the servant, and the servant was of the same citizenship as plaintiff, the case did not present a separable controversy between plaintiff and the master, and was not, therefore, removable to the federal court.
—Roberts v. Shelby Steel Tube Co., 131 Fed. 729....65 C. C. A. 589

REQUESTS.

For instructions in civil actions, see "Trial," § 2.

Digitized by Google

RESALE.

Of goods by seller, see "Sales," § 2.

RESERVATIONS.

Indian reservations, see "Indians."

RES JUDICATA.

See "Judgment." §§ 2, 3.
Proceeding in bankruptcy, see "Bankruptcy," § 1.
Right of bankrupt to discharge, see "Bankruptcy," § 3.

RESTRAINT OF TRADE.

Trusts and other combinations, see "Monopolies," § 1.
Validity of contract, see "Contracts," § 1.

RETROSPECTIVE LAWS.

See "Statutes," § 1.

REVENUE.

See "Customs Duties"; "Internal Revenue."

REVIEW.

See "Appeal and Error"; "Criminal Law," § 1.

RISKS.

Assumed by employé, see "Master and Servant," § 3.
Within insurance policy, see "Insurance," § 7.

SALES.

Of realty, see "Vendor and Purchaser."

§ 1. **Operation and effect.**
Where goods are shipped by a vendor to a vendee, the vendor taking a bill of lading in which he is named both as consignor and consignee, which bill is indorsed in blank and attached to a draft on the vendee for the purchase price, the title to the goods does not pass to the vendee until payment of the draft.
—Portland Flouring Mills Co. v. British & Foreign Marine Ins. Co., 130 Fed. 860.....65 C. C. A. 344

§ 2. **Remedies of seller.**
Defendants contracted for the purchase of the greater part of the product of plaintiff's distillery for 15 seasons, to be delivered in bond at a stipulated price per gallon. The practical construction placed on the

Digitized by Google

contract by both parties was that it was not assignable by either party without the consent of the other. Defendants having made an assignment, plaintiff refused to accept the assignee as a substitute, except with the understanding that defendants would still be bound, while defendants insisted on such acceptance. Plaintiff subsequently agreed to and did deliver to the assignee as requested by defendants, but with a statement to them that he did not waive his right to hold them if the assignee should make default. The contract was treated as in force by both parties for several months thereafter, and until both the assignee and defendants refused to accept further deliveries or to pay therefor. *Held*, that on the repudiation of such contract by the defendants, without legal right, after it had been in effect for one or two seasons, plaintiff was not bound to continue to operate his distillery during the remainder of the term, and to market the product, for the purpose, if possible, of reducing the damages resulting to him from defendants' breach, but was entitled to sue for the breach at once; the measure of his damages being the difference between the contract price and the cost of manufacture.

—Allen v. Field, 130 Fed. 641.....65 C. C. A. 19

A contract by which plaintiff agreed to manufacture for defendants, and defendants to buy, stated quantities of whiskey, not less than 3,000 barrels each season, for a term of 15 years, at a stipulated price per gallon, provided that, if the price of corn in the Chicago market should be more than 45 cents per bushel on the first Tuesday in October in any year, plaintiff should not be obligated to manufacture during that season, but that, if he should manufacture to exceed 500 barrels, defendants should have the right, at their option, to demand the usual quantity and up to 5,000 barrels at the agreed price. *Held*, that such provision did not render the contract unilateral, but was one for the mutual protection of the parties in a contingency which might arise, and the fact that it became operative in one season, after defendants had refused to further perform, did not affect plaintiff's right to recover damages on account of the breach for subsequent seasons, and that the effect of such provision on the amount of damages which would result to plaintiff from the breach during the remainder of the term was properly left to the determination of the jury.

—Allen v. Field, 130 Fed. 641.....65 C. C. A. 19

Where plaintiff, who was the owner of a distillery, on refusal of defendants to further perform a contract by which they agreed to take and pay for the entire product of his distillery for a term of years, excepting a certain number of barrels each year, brought suit for breach of the contract to recover as damages the profit he would have made during the remainder of the term, the defendants were entitled to a reasonable deduction for the less time engaged, and a release from the trouble, risk, and responsibility attending the full execution of the contract.

—Allen v. Field, 130 Fed. 641.....65 C. C. A. 19

Defendants contracted for the purchase of the greater part of the product of plaintiff's distillery for 15 seasons, to be delivered in bond at a stipulated price per gallon. The practical construction placed on the contract by both parties was that it was not assignable by either party without the consent of the other. Defendants having made an assignment, plaintiff refused to accept the assignee as a substitute, except with the understanding that defendants would still be bound, while defendants insisted upon such acceptance. Plaintiff subsequently agreed to and did deliver to the assignee as requested by defendants, but with a statement to them that he did not waive his right to hold them if the assignee should make default. The contract was treated as in force by both parties for several months thereafter, and until both the assignee and defendants refused to accept further delivery or to pay therefor. *Held*, that evidence of the average cost of manufacturing and the average price of the grain used during a series of years was competent, as furnishing a basis on which the jury might estimate the probable cost during the remainder of the term.

—Allen v. Field, 130 Fed. 641.....65 C. C. A. 19

Digitized by Google

Where plaintiff, who was the owner of a distillery, on the refusal of defendants to further perform a contract by which they agreed to take and pay for the entire product of his distillery for a term of years, excepting a certain number of barrels each year, brought suit for breach of the contract, to recover as damages the profit he would have made during the remainder of the term, defendants were entitled to show that plaintiff continued to operate his distillery after the breach, and the profits he actually made thereby up to the time of trial, and to have the same set off against his estimated profits under the contract.

—Allen v. Field, 130 Fed. 641.....65 C. C. A. 19

The contract containing a provision that the whiskey was to be delivered to defendants in plaintiff's warehouse, and that storage should be paid thereon at a stipulated price per month until it was withdrawn, and it being shown that whiskey was customarily left in the warehouse for some years, and that there was a profit in its storage, plaintiff was entitled to recover damages on account of the loss of storage, which was an item presumably taken into consideration by the parties when the contract was made.

—Allen v. Field, 130 Fed. 641.....65 C. C. A. 19

Defendants contracted for the purchase of the greater part of the product of plaintiff's distillery for 15 seasons, to be delivered in bond at a stipulated price per gallon. The practical construction placed upon the contract by both parties was that it was not assignable by either party without the consent of the other. Defendants having made an assignment, plaintiff refused to accept the assignee as a substitute, except with the understanding that defendants would still be bound, while defendants insisted on such acceptance. Plaintiff subsequently agreed to, and did, deliver to the assignee, as requested by defendants, but with a statement to them that he did not waive his right to hold them if the assignee should make default. The contract was treated as in force by both parties for several months thereafter, and until both the assignee and defendants refused to accept further deliveries or to pay therefor. *Held*, on the evidence, that there had been no breach by plaintiff which justified such refusal, and that plaintiff was entitled to recover damages from defendants for their breach.

—Allen v. Field, 130 Fed. 641.....65 C. C. A. 19

On breach of a contract of sale by the buyer, the seller is entitled, after everything necessary to vest title in the buyer has been done, to sell the goods, after notice to the buyer, for the latter's account, and recover the difference between the contract price and the net proceeds of the sale.

—Habeler v. Rogers, 131 Fed. 43.....65 C. C. A. 281

On breach of a contract of sale by the buyer, the seller is entitled, after everything necessary to vest title in the buyer has been done, to store or retain the goods for the buyer's benefit, and recover the contract price.

—Habeler v. Rogers, 131 Fed. 43.....65 C. C. A. 281

On breach of a contract of sale by the buyer, the seller is entitled, after everything necessary to vest title in the buyer has been done, to recover the difference between the contract price and the market value of the goods at the time and place of delivery.

—Habeler v. Rogers, 131 Fed. 43.....65 C. C. A. 281

Where a buyer notified the seller of goods that he would not accept the same, the seller was not required to make a formal tender of the goods in order to sustain an action for breach of contract.

—Habeler v. Rogers, 131 Fed. 43.....65 C. C. A. 281

Where, in an action for breach of a contract to purchase 5,000 tons of phosphate rock, to be delivered between February 1 and June 1, 1900, at the buyer's option, at the rate of not more than 2,500 tons in a month, the sellers proved that they were selling agents of an association of phosphate rock miners in Tennessee, and exclusive selling agents of another mining concern in that state, and had a contract with each to deliver in April and May, 1900, as much as 2,500 tons per month of such rock as

Digitized by Google

was called for in the contract, and that each had the requisite quantity of rock on hand to supply the contract, the evidence was sufficient to establish the sellers' ability to perform.
—Habeler v. Rogers, 131 Fed. 43.....65 C. C. A. 281

§ 3. **Remedies of buyer.**
In an action for breach of a contract for the manufacture and sale of machinery, the buyer's measure of damages was the difference between the contract price and the market value of the machinery at the time and place where it was to be delivered, or, if there was no market value, then the difference between the contract price and what it would have cost the buyer to have the machinery manufactured; and this though plaintiff did not attempt to have equivalent machinery made.
—E. W. Bliss Co. v. Buffalo Tin Can Co., 131 Fed. 51..65 C. C. A. 289

SEAMEN.

The master of a sailing ship on a voyage to Honolulu was not chargeable with a neglect of duty which renders the ship liable in damages because he did not return from the vicinity of Cape Horn to Port Stanley, Falkland Islands, which was the nearest port, and 540 miles distant, with a seaman who received an injury in which both bones of his leg below the knee were broken, where the mate, who had some surgical skill and experience, took charge of the injured man, and set the bones, which united firmly, but, by reason of the fracture being oblique, overlapped, producing a shortening of the leg, and where, while the ship could probably have made the islands in two or three days, the season was midwinter, when the days were short and cold and storms prevailed, and it was further shown without contradiction that the entrance of the harbor at Port Stanley by a ship of her size was very dangerous, and likely to take several days at that season, and that vessels went there only as a last resort, and in cases of dire necessity.
—The Erskine M. Phelps, 131 Fed. 1.....65 C. C. A. 239

SECONDARY EVIDENCE.

In civil actions, see "Evidence," § 1.

SECURITY.

On appeal, see "Appeal and Error," § 5.

SEPARABLE CONTROVERSY.

Removal from state court, see "Removal of Causes," § 1.

SHERIFFS AND CONSTABLES.

Sheriff as proper party to mandamus proceedings, see "Mandamus," § 1.

§ 1. **Powers, duties, and liabilities.**
A sheriff is not protected in levying an attachment against a man on cattle owned by his Indian wife residing on a reservation, which cattle she could not lawfully dispose of, except with the consent of the Indian agent, and which, as required by law, bore the brand of the Indian Department, as well as her own brand, which was different from that of

Digitized by Google

her husband; and it is immaterial that they were in the possession of the husband, or with cattle owned by him—the brands being sufficient to put him on inquiry as to the ownership.
—McKnight v. United States, 130 Fed. 659.....65 C. C. A. 37

SHIPPING.

See "Admiralty"; "Collision"; "Maritime Liens"; "Seamen"; "Towage."
Liability of master of ship for injuries to stevedore, see "Master and Servant," § 1.

§ 1. Carriage of goods.

The casting of the burden of proof on one party or the other in a given case does not destroy the presumptions in favor of a party which exist under the general law of evidence. So a shipowner, claiming exemption from liability for cargo damage under section 3 of the Harter act (Act Feb. 13, 1893, c. 105, 27 Stat. 445 [U. S. Comp. St. 1901, p. 2946]), has the burden of proving the seaworthiness of the vessel; but, in the absence of evidence to the contrary, such burden is met prima facie by the presumption that he performed his duty in making her seaworthy at the commencement of the voyage.
—The Wildcroft, 130 Fed. 521.....65 C. C. A. 145

A ship may sustain the burden of proof resting on her to show that cargo damage was due to a cause for which she is not liable by circumstantial evidence as to the manner in which the water causing the damage entered the hold, and in the absence of direct evidence the court is justified in adopting her theory in that respect, where the facts and circumstances shown are consistent with such theory and not consistent with any other.
—The Wildcroft, 130 Fed. 521.....65 C. C. A. 145

Where a ship was at the commencement of a voyage in all respects seaworthy, and properly manned, equipped, and supplied, damage to a sugar cargo from fresh water which escaped into the hold where the sugar was stowed while the cargo was being discharged, by reason of a valve having been improperly left open while water from the river was being pumped into the engine tank, was due to a fault in the management of the vessel, for which she is exempted from liability by section 3 of the Harter act (Act Feb. 13, 1893, c. 105, 27 Stat. 445 [U. S. Comp. St. 1901, p. 2946]).
—The Wildcroft, 130 Fed. 521.....65 C. C. A. 145

Any right of the carrier under the contract to compel consignees to take goods shipped "from alongside" is waived by the carrier unloading the goods onto the dock.
—The Titania, 131 Fed. 229.....65 C. C. A. 215

The question of the duty of the carrier to deliver goods carried is to be determined by the bill of lading, without regard to the charter party, of which the shipper had no notice till after the terms of his contract with the ship had been unalterably fixed.
—The Titania, 131 Fed. 229.....65 C. C. A. 215

To establish a constructive delivery by a ship of goods deposited on the wharf, it is necessary for the carrier to show that he separated the goods from the general bulk of the cargo, designated them, and gave due notice to the consignees of the time and place of their deposit, and a reasonable time for their removal.
—The Titania, 131 Fed. 229.....65 C. C. A. 215

A bill of lading issued by the master of a ship is prima facie evidence of, and, in the absence of proof to the contrary, establishes, the receipt on board of the goods therein described.
—The Titania, 131 Fed. 229.....65 C. C. A. 215

Digitized by Google

A provision in a bill of lading that the freight shall be "considered as earned, steamer or goods lost or not lost at any stage of the entire transit," is valid and enforceable.
—Portland Flouring Mills Co. v. British & Foreign Marine Ins. Co., 130 Fed. 860.....65 C. C. A. 344

Respondent shipped a cargo of flour, consigned to its own order under bills of lading providing that freight should be deemed earned, vessel or cargo lost or not lost. The flour was shipped under contracts of sale, and was insured by respondent in its own name for sufficient to cover the invoice price and freight. Respondent then indorsed the bills of lading and policies in blank, and attached them to drafts drawn on the purchasers for the selling price and cost of insurance, which were forwarded for collection. *Held*, the vessel having been lost, that respondent was liable for the freight, whether its interest in the cargo was that of owner, or whether it merely retained a lien, since in either case the purchasers were to have possession only on payment of the drafts.
—Portland Flouring Mills Co. v. British & Foreign Marine Ins. Co., 130 Fed. 860.....65 C. C. A. 344

Where a cargo was insured by the shipper for sufficient to cover its value and the freight, the fact that on the wrecking of the vessel the cargo was surrendered by the master to the insurer without notice to the shipper did not prejudice him, and constituted no defense to an action to collect the freight under the terms of the bills of lading.
—Portland Flouring Mills Co. v. British & Foreign Marine Ins. Co., 130 Fed. 860.....65 C. C. A. 344

§ 2. Demurrage.

Where a vessel commenced discharging cargo in Rio de Janeiro on the day that the revolution began there in 1893, in which the insurgents captured government warships in the harbor, and there was thereafter more or less firing between such ships and forts and batteries on shore, and such a condition of affairs was produced by the hostilities as to render it practically impossible to receive the cargo with the dispatch contemplated by the charter, either because of the intrinsic danger incident to unloading or the inability to procure the necessary men to do the work, such condition constituted an unavoidable hindrance, and, to the extent that it prevented compliance with the contract, excused performance, and relieved the charterers from liability under the provision requiring them to pay demurrage for detention by the default of themselves or their agent.
—Burrill v. Crossman, 130 Fed. 763.....65 C. C. A. 189

Where libelant contracted to transport coal for respondent consignee, who was the owner, under a verbal agreement as to the terms of freight, and that the demurrage rate should be $6 per day, and libelant did not call respondent's attention to the fact that the shipper had inserted in the bill of lading a provision for demurrage at the rate of 6 cents a ton of cargo for each day's detention, until after the coal had been delivered, and respondent did not discover such change until delivery had been completed, the shipper having no authority to make a new contract for respondent, the latter was liable for the demurrage only at the rate specified in the original contract.
—Burns v. Burns, 131 Fed. 238.....65 C. C. A. 224

SMUGGLING.

See "Customs Duties," § 3.

SPECIFIC PERFORMANCE.

§ 1. Good faith and diligence.

When a contract evidences an actual sale and purchase of real property, and time is not an essential element therein, and the parties have

Digitized by Google

substantially progressed with performance, the rule requiring a tender of payment by the purchaser before institution of suit for specific performance is not of imperative application, and a bill for that purpose will not be dismissed for failure to make such tender, where it appears that complainant has a substantial interest in the property, and a dismissal would work loss and inconvenience to both parties.

—Hosmer v. Wyoming Ry. & Iron Co., 129 Fed. 883...65 C. C. A. 81

§ 2. **Proceedings and relief.**

Where a contract evidences an actual sale and purchase of real property, and time is not an essential element therein, and the parties have substantially progressed with performance, the rule requiring a tender of payment by the purchaser before institution of suit for specific performance is not of imperative application; but where the costs of suit might have been avoided, had the tender been made, they will be taxed to complainant, although a suit is contested.

—Hosmer v. Wyoming Ry. & Iron Co., 129 Fed. 883...65 C. C. A. 81

STAMPS.

See "Internal Revenue."

STATES.

See "United States."
Courts, see "Courts."
Effect on maritime lien of participation in proceedings in state court, see "Maritime Liens," § 1.
Federal taxation of exercise of functions of state government, see "Internal Revenue."
Public lands, see "Public Lands," § 1.

STATUTES.

Adoption by United States courts of state laws as rules of decision, see "Courts," § 1.
Laws impairing obligation of contracts, see "Constitutional Law," § 1.

Provisions relating to particular subjects.

See "Bankruptcy," § 2; "Contracts," § 1; "Counties," § 1; "Customs Duties"; "Insurance," § 1; "Limitation of Actions," § 1; "Mines and Minerals"; "Monopolies," § 1; "Public Lands," § 1; "Railroads," § 2.
Actions by or against United States, see "United States," § 1.
Revenue laws, see "Internal Revenue."

§ 1. **Construction and operation.**

Statutes, the purpose of which is the protection of the lives and limbs of men, are so construed as to prevent the mischief and advance the remedy, so far as the words fairly permit.

—Chicago, M. & St. P. Ry. Co. v. Voelker, 129 Fed. 522.....
65 C. C. A. 226

Punctuation is a minor, and not a controlling, element in interpretation, and courts will disregard the punctuation of a statute, or repunctuate it, if need be, to give effect to what otherwise appears to be its purpose and true meaning.

—Chicago, M. & St. P. Ry. Co. v. Voelker, 129 Fed. 522.....
65 C. C. A. 226

Though, in construing a law, a court may not, in order to reach a conclusion as to legislative intent, inquire what individual members of Congress supposed a bill to mean, or what they intended to accomplish by

Digitized by Google

their votes, it may consult the history of the act and the reports of committees having it in charge.
—Mosle v. Bidwell, 130 Fed. 334.....65 C. C. A. 533

On appeal from a decision construing section 20, Customs Administrative Act June 10, 1890 (chapter 407, 26 Stat. 140 [U. S. Comp. St. 1901, p. 1950]), it appeared that Congress, in consequence of the apprehended results of said decision, had, in the act of December 15, 1902, c. 1, 32 Stat. 753 [U. S. Comp. St. Supp. 1903, p. 255], enacted an amendment, which, as reported to the House of Representatives by the committee having the bill in charge, was intended to "confine the language of the section [20] to the primary meaning and intent of the law." *Held*, that the latter statute should in this case be taken as declaratory of the meaning of the earlier one, and that said section should be construed to have had the effect given by the amendment.
—Mosle v. Bidwell, 130 Fed. 334.....65 C. C. A. 533

The rule that statutes are to be given a prospective, rather than a retrospective, operation, like other rules of interpretation, is resorted to for the purpose of giving effect to the presumed and reasonably probable intention of the Legislature when the terms of the statute do not of themselves make the intention clear, and cannot be invoked to change or defeat the intention when it is made obvious or certain by the terms of the statute.
—Lamb v. Powder River Live Stock Co., 132 Fed. 434..65 C. C. A. 570

§ 2. **Pleading and evidence.**
Where the published record of joint resolutions of Congress, duly authenticated, showed that the resolutions were approved by the President on May 27, 1902, such record could not be impeached by proof showing that they were not in fact approved until a later date.
—Gibson v. Anderson, 131 Fed. 39.....65 C. C. A. 277

STATUTES CONSTRUED.

UNITED STATES.

1882, May 6, ch. 126, 22 Stat. 58. Amended by Act 1884, July 5, ch. 220, 23 Stat. 115 [U. S. Comp. St. 1901, p. 1305]..... 562
1884, July 5, ch. 220, 23 Stat. 115 [U. S. Comp. St. 1901, p. 1305]... 562
1888, Aug. 9, ch. 818, 25 Stat. 392.. 37
1889, March 2, ch. 393, § 1, 25 Stat. 873 [U. S. Comp. St. 1901, p. 3696]..... 452
1890, June 10, ch. 407, § 20, 26 Stat. 140 [U. S. Comp. St. 1901, p. 1950]..... 533
1890, July 2, ch. 647, 26 Stat. 209 [U. S. Comp. St. 1901, p. 3200].. 269
1891, March 3, ch. 517, 26 Stat. 826 [U. S. Comp. St. 1901, p. 547].... 79
1891, March 3, ch. 517, § 6, 26 Stat. 828 [U. S. Comp. St. 1901, p. 549]..... 79
1891, March 3, ch. 517, § 7, 26 Stat. 828. Amended by Act 1900, June 6, ch. 803, 31 Stat. 660 [U. S. Comp. St. 1901, p. 551]..... 192
1892, July 20, ch. 209, § 4, 27 Stat. 252 [U. S. Comp. St. 1901, p. 707] 541
1893, Feb. 13, ch. 105, § 3, 27 Stat. 445 [U. S. Comp. St. 1901, p. 2946]..... 145
1893, March 2, ch. 196, 27 Stat. 531 [U. S. Comp. St. 1901, p. 3174].. 226, 227
1893, March 2, ch. 196, § 6, 27 Stat. 532. Amended by Act 1896, April 1, ch. 87, 29 Stat. 85 [U. S. Comp. St. 1901, p. 3175]..... 320
1893, March 2, ch. 196, § 8, 27 Stat. 532 [U. S. Comp. St. 1901, p. 3176]..... 227
1896, April 1, ch. 87, 29 Stat. 85 [U. S. Comp. St. 1901, p. 3175]..... 320
1897, July 24, ch. 11, § 1, Schedule E, par. 209, 30 Stat. 168 [U. S. Comp. St. 1901, p. 1647]..... 557
1897, July 24, ch. 11, § 2, Free List, par. 697, 30 Stat. 202 [U. S. Comp. St. 1901, p. 1689]..... 603
1898, June 13, ch. 448, § 13, 30 Stat. 454. Amended by Act 1901, March 2, ch. 806, § 7, 31 Stat. 941 [U. S. Comp. St. 1901, p. 2294]..... 205
1898, June 13, ch. 448, § 14, 30 Stat. 455 [U. S. Comp. St. 1901, p. 2296] 205
1898, June 13, ch. 448, Schedule A, 30 Stat. 458 [U. S. Comp. St. 1901, p. 2300]. Repealed by Act 1902, April 12, ch. 500, 32 Stat. 96 [U. S. Comp. St. Supp. 1903, p. 276]..... 205

Digitized by Google

1898, June 13, ch. 448, Schedule A, par. 6, 30 Stat. 458 [U. S. Comp. St. 1901, p. 2304] 327
1898, July 1, ch. 541, § 2, subd. 15, 30 Stat. 546 [U. S. Comp. St. 1901, p. 3421] 477
1898, July 1, ch. 541, § 3, cl. a, subd. 1, 30 Stat. 546 [U. S. Comp. St. 1901, p. 3422] 201
1898, July 1, ch. 541, § 3a(2), 30 Stat. 546 [U. S. Comp. St. 1901, p. 3422] 676
1898, July 1, ch. 541, § 4b, 30 Stat. 546 [U. S. Comp. St. 1901, p. 3422]. Amended by Act 1903, Feb. 5, ch. 487, 32 Stat. 797 [U. S. Comp. St. Supp. 1903, p. 410] 295
1898, July 1, ch. 541, § 5f, 30 Stat. 548 [U. S. Comp. St. 1901, p. 3424] 499
1898, July 1, ch. 541, § 23, subds. a, b, 30 Stat. 552, 553 [U. S. Comp. St. 1901, p. 3431] 259
1898, July 1, ch. 541, § 25a, 30 Stat. 553 [U. S. Comp. St. 1901, p. 3432] 414
1898, July 1, ch. 541, §§ 60d, 64b, 30 Stat. 562, 563 [U. S. Comp. St. 1901, pp. 3446, 3447] 48
1900, June 6, ch. 808, 31 Stat. 660 [U. S. Comp. St. 1901, p. 551] ... 192
1901, March 2, ch. 806, § 7, 31 Stat. 941 [U. S. Comp. St. 1901, p. 2294] 205
1902, April 12, ch. 500, 32 Stat. 96 [U. S. Comp. St. Supp. 1903, p. 276] 205
1902, May 27, ch. 888, 32 Stat. 245 277
1902, May 27, Res. No. 24, 32 Stat. 742 277
1902, June 19, Res. No. 31, 32 Stat. 744 277
1902, Dec. 15, ch. 1, 32 Stat. 753 [U. S. Comp. St. Supp. 1903, p. 255] 533
1903, Feb. 5, ch. 487, 32 Stat. 797 [U. S. Comp. St. Supp. 1903, p. 410] 295
1903, March 3, ch. 1012, § 21, 32 Stat. 1218 [U. S. Comp. St. Supp. 1903, p. 180] 1

REVISED STATUTES.

§ 13 [U. S. Comp. St. 1901, p. 6] ... 205
§ 251 [U. S. Comp. St. 1901, p. 138] 557
§§ 819, 921 [U. S. Comp. St. 1901, pp. 629, 686] 452
§ 2319 [U. S. Comp. St. 1901, p. 1424] 277
§ 2802 [U. S. Comp. St. 1901, p. 1873] 603
§§ 3303, 3318 [U. S. Comp. St. 1901, pp. 2157, 2164] 301
§ 5480. Amended by Act 1889, March 2, ch. 393, § 1, 25 Stat. 873 [U. S. Comp. St. 1901, p. 3696] ... 452

COMPILED STATUTES 1901.

Page 6 205
Page 138 557
Pages 547, 549 79
Page 551 192
Pages 629, 686 452
Page 707 541
Page 1305 562
Page 1424 277
Page 1647 557
Pages 1689, 1873 603
Page 1950 533
Pages 2157, 2164 301
Pages 2294, 2296, 2300 205
Page 2304 327
Page 2946 145
Page 3174 ..... 226, 227
Page 3175 320
Page 3176 227
Page 3200 269
Page 3421 477
Page 3422 ..... 201, 295, 676
Page 3424 499
Page 3431 259
Page 3432 414
Pages 3446, 3447 48
Page 3696 452

COMPILED STATUTES (SUPP.) 1903.

Page 180 1
Page 255 533
Page 276 205
Page 410 295

CALIFORNIA.

CIVIL CODE.

§§ 2607, 2608 127

LAWS.

1897, pp. 465, 466, ch. 277 127

COLORADO.

LAWS.

1895, p. 239, ch. 106. Amended by Laws 1899, p. 248, ch. 113 570
1899, p. 248, ch. 113 570

IOWA.

CODE 1873.

§§ 478, 479 641

CODE 1897.

§§ 2080, 2097 226

LAWS.

1894, p. 18, ch. 7 641

KANSAS.

GENERAL STATUTES 1889.

Ch. 23, §§ 32, 44 ..... 185, 186

Digitized by Google

KENTUCKY.

CIVIL CODE OF PRACTICE.

§ 452 181

REVISED STATUTES 1852.

Ch. 102, § 3 517

STATUTES 1894.

§ 1882 427

LAWS.

1868, p. 622, ch. 548 427

MICHIGAN.

HOWELL'S ANNOTATED STATUTES.

§ 9354 269

MONTANA.

CIVIL CODE.

§§ 1606, 1609, 1611, 1700 205

PENNSYLVANIA.

LAWS.

1876, p. 66, § 48 350
1881, p. 20 156

SOUTH CAROLINA.

CODE OF CIVIL PROCEDURE.

§ 48 481

TENNESSEE.

SHANNON'S CODE.

§§ 1574–1576 563

WASHINGTON.

BALLINGER'S ANNOTATED CODES & STATUTES.

§ 4255 121

STOCK.

Corporate stock, see "Corporations," § 2.

STREET RAILROADS.

Persons concluded by decree in foreclosure proceedings against street railway company, see "Judgment," § 3.

SUBMISSION OF CONTROVERSY.

By agent, see "Principal and Agent," § 1.

SUBROGATION.

Of insurer, see "Insurance," § 8.

SUBSCRIPTIONS.

To corporate stock, see "Corporations," § 2.

TARIFF.

See "Customs Duties."

TAXATION.

See "Customs Duties"; "Internal Revenue."
Mandamus to compel levy of tax, see "Mandamus," § 1.

Local or special taxes.

See "Counties," § 1.
Assessments for municipal improvements, see "Municipal Corporations," § 1.

Digitized by Google

TELEGRAPHS AND TELEPHONES.

Telephone company as employer, see "Master and Servant," §§ 1, 3, 5.

§ 1. Regulation and operation.

A telegraph company cannot be subjected to punitive damages because of the transmission and delivery of a libelous message by its agents, where no malice or wrongful intent is shown on the part of either the company or its agents, other than might be inferred from the acts themselves.

—Western Union Tel. Co. v. Cashman, 132 Fed. 805..65 C. C. A. 607

TIME.

For answering petition in bankruptcy, see "Bankruptcy," § 1.
For filing assignment of errors, see "Appeal and Error," § 7.

TITLE.

Effect of assignment, see "Assignments," § 1.
Effect of sale, see "Sales," § 1.
To insurance policy, see "Insurance," § 2.

TOOLS.

Liability of employer for defects, see "Master and Servant," § 1.

TORTS.

Particular remedies for torts.

See "Trespass," § 1; "Trover and Conversion," § 1.

Particular torts.

See "Forcible Entry and Detainer," § 1; "Fraud"; "Negligence"; "Trespass"; "Trover and Conversion."
Maritime torts, see "Collision."
Sale of cargo under erroneous judgment in admiralty, see "Admiralty," § 2.

TOWAGE.

Collisions with tugs and vessels in tow, see "Collision," § 1.

Where it was shown that the moving of a schooner from her dock up the river to a wider part of the channel, to be there turned and headed for the sea, was in sole charge of a tug, and that, although it was a calm summer day, with a moderate tide, and the schooner's helm was hard aport, she ran aground on the port side of the channel before she had gone more than three or four lengths, a prima facie case of negligence against the tug is made out, and to exonerate herself from liability she has the burden of showing that the accident occurred from some cause for which she was not in fault.

—Burr v. Knickerbocker Steam Towage Co., 132 Fed. 248..... 65 C. C. A. 554

Digitized by Google

TOWNS.

See "Municipal Corporations."

TRADE-MARKS AND TRADE-NAMES.

§ 1. Infringement and unfair competition.

Unless a defendant adopts means calculated to injure complainant through unfair competition, the intention is immaterial; there being no ground for relief where there has been no injury.
—G. W. Cole Co. v. American Cement & Oil Co., 130 Fed. 703..... 65 C. C. A. 105

A trade-mark for an oil compounded from a secret formula, and used for a lubricant, rust preventer, and a polish, consisting of the words "Three in One" printed in black letters, and the picture of the figure "1" in red on a white background, upon which are superimposed in white the figure "3" and the word "in," is not infringed by a trade-mark used for a similar oil consisting of the words "Big Four" in red, and the picture of a large figure "4" in blue, superimposed upon a rectangular background in red, containing other descriptive words in blue and white letters.
—G. W. Cole Co. v. American Cement & Oil Co., 130 Fed. 703..... 65 C. C. A. 105

Labels and cartons used by complainant and those subsequently adopted by defendant compared, and *held* not to show such similarity as to charge defendant with unfair competition.
—G. W. Cole Co. v. American Cement & Oil Co., 130 Fed. 703..... 65 C. C. A. 105

The fact that a defendant has been, and still is, a large purchaser of an article made by complainant as a jobber, does not create any trust relation between them which precludes it from placing on the market a competing article of its own manufacture.
—G. W. Cole Co. v. American Cement & Oil Co., 130 Fed. 703..... 65 C. C. A. 105

That defendant issued a circular advertising an article of its manufacture to some extent similar to one issued by complainant, and inclosed in the cartons containing its goods, does not constitute unfair competition, where defendant's circulars are not so inclosed, and are sent only to jobbers, and do not come into the hands of retail purchasers.
—G. W. Cole Co. v. American Cement & Oil Co., 130 Fed. 703..... 65 C. C. A. 105

Unfair competition is distinguishable from infringement of a trade-mark, in that it does not necessarily involve the question of the exclusive right of another to the use of the name, symbol, or device copied or imitated. A word may be purely generic or descriptive, and so not capable of becoming an arbitrary trade-mark, and yet there may be an unfair use of it which will constitute unfair competition.
—G. W. Cole Co. v. American Cement & Oil Co., 130 Fed. 703..... 65 C. C. A. 105

The fact that a defendant which had been engaged in the manufacture and sale of oil in bottles for 20 years adopted for a new product a label wholly distinctive from those previously used is no evidence of a fraudulent intention to compete unfairly with complainant, which had placed on the market a similar article, where its prior labels were also distinctive from each other, and the new product was different in quality from any it had previously made.
—G. W. Cole Co. v. American Cement & Oil Co., 130 Fed. 703..... 65 C. C. A. 10-

Digitized by Google

The law of unfair competition seeks only to restrain fraudulent practices inducing confusion of goods and deception of the public, and it cannot be used to prevent a defendant from adopting a trade-mark or label intended to attract attention and popularize its product, although it results, and is intended to result, in better enabling it to compete with complainant, where no deception or confusion of goods is caused or intended thereby.

—G. W. Cole Co. v. American Cement & Oil Co., 130 Fed. 703..... 65 C. C. A. 105

In determining the profits made by a defendant from the sale of an article in a suit for unfair competition, the expenses of making the sales must be deducted from the gross profits.

—Walter Baker & Co. v. Slack, 130 Fed. 514.....65 C. C. A. 138

Where a defendant has deliberately engaged in unfair trade, complainant is entitled to recover damages and profits from the time the violation of his rights commenced.

—Walter Baker & Co. v. Slack, 130 Fed. 514.....65 C. C. A. 138

Complainant, Walter Baker & Co., Limited, and its predecessors in business, have since 1780 been engaged in the manufacture of cocoa and chocolate, which have become well known in the trade under the general name of "Baker's Cocoa" and "Baker's Chocolate." In 1897 one W. H. Baker, who had then recently commenced the manufacture of similar products, which were sold in unfair competition with complainant's, was enjoined from using the word "Baker" in connection with his products, except when accompanied with the statement in prominent letters, "W. H. Baker is distinct from the old chocolate manufactory of Walter Baker & Company," and such requirement has since been observed. Defendant, a retail grocer, advertised to sell "Baker's" cocoa and chocolate, and when customers called for either by that name they were given the W. H. Baker product. After suit brought, by his direction such customers were told: "We have two Bakers. Which do you want, W. H. or Walter Baker?" He testified that 9 out of 10 would not know the difference, and would ask for the best, in which case they were given the W. H. Baker product. *Held*, that there was a clear design to deceive customers, the profit being greater on the product sold, and that complainant was entitled to an injunction restraining defendant from advertising any product but complainant's under the name of "Baker," or furnishing it in response to requests for "Baker's" goods, or in any manner using such name in connection with other goods without clearly designating by whom such goods were made.

—Walter Baker & Co. v. Slack, 130 Fed. 514.....65 C. C. A. 138

Where defendants admitted that they were manufacturing and selling mills in competition with complainant's mills, and had used parts of complainant's mills as patterns wherever it was convenient or profitable to do so, and that they were now making and selling mills which in effectiveness and attractiveness were the same goods as those sold by complainant, such competition was unlawful, entitling complainant to an injunction.

—Enterprise Mfg. Co. v. Landers, Frary & Clark, 131 Fed. 240..... 65 C. C. A. 587

Where in a suit to restrain defendants from selling certain grinding mills, on the ground of unlawful competition, the answer averred that, in addition to the manufacture and sale of similar mills by defendants, defendants also intended to make other mills which will be substantially the same goods as other classes of mills made and sold by complainant, a decree enjoining defendants from selling "any grinding mills having the characteristic shape, design, color, and ornamentation of the grinding mills sold by complainant, and referred to by the numbers 0, 1, 2," etc. (giving 15 numbers), was justified, though there was no proof of any sale of mills corresponding in size to such numbers.

—Enterprise Mfg. Co. v. Landers, Frary & Clark, 131 Fed. 240..... 65 C. C. A. 587

Digitized by Google

TRESPASS.

§ 1. Actions.

In an action of trespass for removing sand from the beach in front of and upon plaintiff's lot, where there was no evidence to show the quantity taken nor from which the jury could determine the extent of the damage to plaintiff's lot, the court correctly charged that nominal damages only were recoverable.
—Murray v. Pannaci, 130 Fed. 529.....65 C. C. A. 153

To justify the imposition of exemplary damages for a trespass, there must be evidence that the injury was inflicted maliciously or wantonly, or, at least, with wrongful motive; and defendants, who removed sand from the beach in front of plaintiff's lot in the belief that it was their legal right, and ceased at once on plaintiff's making objection, cannot properly be subjected to punitive damages.
—Murray v. Pannaci, 130 Fed. 529.....65 C. C. A. 153

In an action of trespass for removing sand from the beach in front of plaintiff's lot, plaintiff is not entitled to recover as damages the expense incurred in a chancery suit, instituted against defendant to determine the rights of ocean lot owners, which is still pending on appeal.
—Murray v. Pannaci, 130 Fed. 529.....65 C. C. A. 153

Where one may bring actions against two joint trespassers severally, he may recover separate judgments, and may elect between them. He is not required to accept satisfaction of the judgment in one case before the other is tried, but, if he does so, he voluntarily abandons his demand against the defendant in the other.
—Western Coal & Mining Co. v. Petty, 132 Fed. 603..65 C. C. A. 667

TRIAL.

Harmless error, see "Appeal and Error," § 9.
Reversal for error in conduct of trial, see "Appeal and Error," § 10.

Trial of particular civil actions or proceedings.

See "Bankruptcy," § 1; "Negligence," § 2.
For personal injuries, see "Master and Servant," § 5.
On insurance policy, see "Insurance," § 9.
On subscriptions to corporate stock, see "Corporations," § 2.
Suits in admiralty, see "Admiralty," § 1.

Trial of criminal prosecutions.

For offenses against postal laws, see "Post Office," § 1.

§ 1. Taking case or question from jury.

When there is a substantial conflict in the evidence relating to the material facts, and when fair and rational minds may well draw different conclusions from established facts, the court should submit the issues to the jury.
—Chicago Great Western Ry. Co. v. Roddy, 131 Fed. 712.....
65 C. C. A. 470

When the evidence leaves the material facts admitted or undisputed, and when the evidence leaves the material facts and the deductions from them of such a conclusive character that the exercise of a sound judicial discretion would permit the court to give effect to but one verdict, it is its duty to instruct the jury to return it.
—Chicago Great Western Ry. Co. v. Roddy, 131 Fed. 712.....
65 C. C. A. 470

Where the evidence upon a question of fact is so clearly preponderant, or of such a conclusive character, that the court would be bound, in the

Digitized by Google

exercise of a sound judicial discretion, to set aside a finding in opposition to it, it is its duty to withdraw the question from the jury and direct their finding.

—Patillo v. Allen-West Commission Co., 131 Fed. 680..65 C. C. A. 508

§ 2. Instructions to jury.

A general exception to the refusal of a number of requests to charge is not well taken if any of such requests were properly refused.

—Bean-Chamberlain Mfg. Co. v. Standard Spoke & Nipple Co., 131 Fed. 215.....65 C. C. A. 201

Where a rule or principle of law is clearly declared by the court in its general charge, it is not error to refuse to repeat it in the words of counsel.

—Chicago Great Western Ry. Co. v. Roddy, 131 Fed. 712..... 65 C. C. A. 470

Where a request for an instruction contains several propositions of law, any one of which is unsound, it is not error to refuse it.

—Chicago Great Western Ry. Co. v. Roddy, 131 Fed. 712..... 65 C. C. A. 470

§ 3. Verdict.

Where a verdict on the whole was just, and certain instructions as to the measure of damages given by the court, and apparently disregarded by the jury, were erroneous, the court was not bound to grant a new trial on the ground that the jury disregarded such instructions.

—Lazier Gas Engine Co. v. Du Bois, 130 Fed. 834....65 C. C. A. 172

TROVER AND CONVERSION.

Admissions as evidence, see "Evidence," § 2.

§ 1. Actions.

Plaintiff was evicted from a house occupied by her as a boarding house under a judgment for possession recovered by defendant, who took possession of her furniture therein. From certain of the bedrooms she had removed furniture owned by defendant and substituted her own. *Held*, that she could not maintain trover for any part of her own furniture until she had returned or offered to return that owned by defendant.

—Hoffman v. Wilson, 130 Fed. 694.....65 C. C. A. 14

TRUSTS.

Combinations to monopolize trade, see "Monopolies," § 1.
Trust deeds, see "Mortgages."

TUGS.

See "Towage."

ULTRA VIRES.

Acts of corporations, see "Corporations," § 4.

UNFAIR COMPETITION.

See "Trade-Marks and Trade-Names," § 1.

Digitized by Google

UNITED STATES.

See "Customs Duties"; "Post Office."
Citizens, see "Citizens."
Courts, see "Courts," §§ 1, 2; "Removal of Causes."
Indians, see "Indians."

§ 1. **Actions.**
The right of the United States to maintain an action in respect to a governmental matter cannot be affected by a state enactment requiring a notice to be given or demand made as a condition precedent to suit.
—McKnight v. United States, 130 Fed. 659.....65 C. C. A. 37

UNLAWFUL DETAINER.

See "Forcible Entry and Detainer."

VENDOR AND PURCHASER.

See "Sales."
Conclusiveness of decree in foreclosure on purchaser acquiring rights before sale of mortgaged property under decree, see "Judgment," § 3.
Specific performance of contract, see "Specific Performance."

§ 1. **Performance of contract.**
A court of equity will not hold time to be of the essence of a contract for the absolute sale of mining property, so as to cause the forfeiture of the rights of the vendee thereunder because of his failure to make payment promptly, in the absence of an express stipulation to that effect, and where it appears from recitals in the contract in making statement of the consideration that the greater part of the original purchase price of the property had been paid by the vendee under prior contracts between the parties for which the later one was substituted.
—Hosmer v. Wyoming Ry. & Iron Co., 129 Fed. 883....65 C. C. A. 81

VERDICT.

Assignments of error, see "Appeal and Error," § 7.
Directing verdict in civil actions, see "Trial," § 1.
In civil actions, see "Trial," § 3.
Review on appeal or writ of error, see "Appeal and Error," § 9.

VICE PRINCIPALS.

See "Master and Servant," § 2.

VILLAGES.

See "Municipal Corporations."

WAIVER.

Of right to forfeit insurance policy, see "Insurance," § 6.

WARRANTY.

By insured, see "Insurance," § 4.

Digitized by Google

WATERS AND WATER COURSES.

Nature and grounds of jurisdiction to review decree fixing rates of irrigation company, see "Appeal and Error," § 2.

§ 1. **Public water supply.**

A city ordinance granting a corporation a franchise to operate waterworks in the city on conditions specified, after having been accepted by the corporation, constitutes a contract between the corporation and the city.

—Armour Packing Co. v. Metropolitan Water Co., 130 Fed. 851.... 65 C. C. A. 335

Where a municipal ordinance granting a corporation a water franchise provided that the water rates to consumers should not exceed the rates given to the citizens of an adjoining city, to which the corporation also furnished water under a similar franchise, such provision should be construed to relate only to prices charged by such corporation, and did not include prices charged by such adjoining city after it had exercised its statutory right to purchase the corporation's water plant therein and operate the same as a municipal department.

—Armour Packing Co. v. Metropolitan Water Co., 130 Fed. 851.... 65 C. C. A. 335

Under the Constitution of Idaho, which declares the use of all waters appropriated for sale, rental, or distribution to be a public use, and the right to collect compensation therefor a franchise, which cannot be exercised except by authority of, and in the manner prescribed by, law, and which authorizes the Legislature to provide, as it has done, for the fixing of maximum rates to be charged for water so sold, an irrigation company appropriating water for sale has no authority to make a distinction between its consumers, and, while supplying some with water under private contracts at low rates, attack the validity of maximum rates fixed by the county commissioners under the statute, on the ground that, as applied to its other consumers, they will not yield a reasonable return on its investment, but will amount to a taking of its property without compensation. In determining the reasonableness of such rates, they must be considered as applicable to all its consumers.

—Boise City Irrigation & Land Co. v. Clark, 131 Fed. 415..... 65 C. C. A. 399

WITNESSES.

See "Evidence."

Experts, see "Evidence," § 4.

Opinions, see "Evidence," § 4.

WRITS.

Particular writs.

See "Mandamus."

Writ of error, see "Appeal and Error."

[END OF VOLUME.]

Ex. J. M.
6/20/15
Digitized by Google

Digitized by Google

Digitized by Google

Digitized by Google

Digitized by Google

Digitized by Google

Digitized by Google